DBKO Design+Build LLC
Sub & Vendor Contact List
Warranty – Close-out Documents
O&M Manuals, As-builts

Madera WHSE project

Subcontractor/Vendor contact list	Page 2
Advanced Drywall (framing, drywall, & insulation)	Page 3
Allied Dock (rolling commercial slat doors)	Page 4 - 12
Arreola Concrete (concrete)	Page 13
Cen Cal Steel (PEMB erection – Bldgs. A & B)	Page 14
Custom Curb (skylights)	Page 15
Del Toro Steel (PEMG erection – Bldgs. C & D)	Page 16
GT Plumbing (bldg. plumbing systems)	Page 17
Henson General Engineering (earthwork – paving – striping – signage)	Page 18
Kerb Appeal (wrought iron, chain link & gates)	Page 19 - 75
LS Landscape (landscape planting/irrigation)	Page 76 - 121
MCS Glass (aluminum storefront with sunshades)	Page 122 - 146
Performance Electric (electrical)	Page 147 - 160
San Joaquin Fire (fire sprinklers)	Page 161 - 269
Tec-Spec (RR accessories, signage, bike racks, fire extinguishers)	Page 270 - 273
The Tint Shop (storefront window tint)	Page 274 - 275
Valley Air Conditioning & Repair (HVAC systems)	Page 276
Valleystone Masonry (6” block enclosure)	Page 465

MIW Madera WHSE

SUBCONTRACTOR/VENDOR	SCOPE	NAME	PHONE	EMAIL
Advanced Drywall	framing, drywall, insulation	Brett McIntyre	559/840-2274	brett@adcfresno.com
Allied Dock	rolling commer'l slat doors	Whitney Reynolds	559/276-6505	whitney@allieddock.com
Arreola	concrete	David Arreola	559/679-3637	david@arreolaconcrete.com
Cen Cal Steel	PEMB erection Bldg A & B	Robert Reynoso	559/514-7481	robertr@cencalsteel.com
Del Toro	PEMB erection Bldg C & D	Angel Del Toro	559/799-2147	adeltoro@deltorosteelerectors.net
GT Plumbing	bldg. plumbing systems	Tony Gaitan	559/779-9695	tonygaitan96@outlook.com
Henson	earthwork/paving/striping/signage	Bryan Henson	559/859-5899	bryanhgeinc@gmail.com
Kerb Appeal	wrought iron, chain link & gates	Tim Kerber	559/281-6010	tim@kafence.net
LS Landscape	landscape planting/irrigation	Luis Hernadez	559/253-9812	lslandscape@yahoo.com
MCS Glass	alum storefront with sunshades	Christina Foanene	559/243-1080	cristina@mcs.glass
Perf. Elec	electrical	Tom Dukes	559/631-1000	elect28@msn.com
SJF	fire sprinklers	Greg Sani	559/292-7111	greg@sjfmail.com
Tec Spec	RR accessories, signage, bike racks, fire extinguishers	William McKeand	559/227-5060	tecspecbill@gmail.com
Valley Air	HVAC systems	Steve Mendrin	559/217-6869	smendrin@valleyairrepair.com
Valleystone Masonry	6" block trash enclosure	Eduardo Ruiz	559/473-9253	valleystonemasonary@gmail.com
Custom Curb	skylights	Jack Haas	805/647-1200	jack@customcurbinc.com
The Tint Shop	storefront window tint	Carmen Flores	559/536-7887	joesmobiletint23@gmail.com

ADVANCED DRYWALL CONSTRUCTION, INC.
5529 E. Lamona Avenue ♦ Fresno CA 93727
Phone: 559.840.2274 ♦ Fax: 559.840.2584
CA License #1040914

Guarantee / Warranty

GUARANTEE/WARRANTY for **ADVANCED DRYWALL CONSTRUCTION, INC.**

We hereby warrant and guarantee that the Metal Stud Framing, Drywall, Batt Insulation, ½" Rigid Insulation and FRP which we have installed at Madera Industrial WHSE, Madera, CA has been done in accordance with the drawings and specifications and that the work as installed will fulfill the requirements of the guarantee/warranty included in the specifications. We agree to repair or replace any and all of our work, together with any other adjacent work which may be displaced by so doing, that may prove to be defective in its workmanship or materials within a period of one (1) year from the date of acceptance of the above-mentioned structure by the Owner, without any expense whatsoever to said Owner, except for ordinary wear and tear, and unusual abuse or neglect.

In the event of our failure to comply with the above-mentioned conditions within ten (10) days after being notified in writing by the Owner or General Contractor, we collectively or separately do hereby authorize the Owner or General Contractor to proceed to have said defects repaired and corrected at our expense and we will honor and pay the costs and charges therefore upon demand.

The date of Notice of Completion, 4/24/23, will be considered the date of acceptance for the purpose of guarantees required, unless otherwise stated in the contract documents.

Signed:_____, Date 4/12/2023
Brett McIntyre, President

Countersigned:_____, Date_____

ALLIED DOCK PRODUCTS, INC.
3444 W. Ashcroft Avenue, Fresno, CA 93722
Ph: (559) 276-6505 Fax: (559) 271-0788
www.allieddock.com
tracy@allieddock.com

GUARANTEE/WARRANTY for DBKO+Build -Maderal Industrial WHSE Job #21107

We hereby warrant and guarantee that the Porvene Model 324 Rolling Commercial Slat Doors which we have installed in the Madera Industrial WHSE-DBKO Job #21107 has been done in accordance with the drawings and specifications and that the work as installed will fulfill the requirements of the guarantee/warranty included in the specifications. We agree to repair or replace any or all of our work, together with any other adjacent work which may be displaced by so doing, that may prove to be defective in its workmanship or materials within a period of one (1) year from the date of acceptance of the above-named structure by the owner, without any expense whatsoever to said owner, except for normal wear and tear and unusual abuse or neglect.

In the event of our failure to comply with the above-mentioned conditions within ten (10) days after being notified in writing by the Owner or General Contractor, we collectively or separately do hereby authorize the Owner or General Contractor to proceed to have said defects repaired and corrected at our expense and we will honor and pay the costs and charges therefore upon demand.

The date of filing the Notice of Completion will be considered the date of acceptance for the purpose of guarantees required, unless otherwise stated in the contract documents.

Allied Dock Products Inc. – 3444 W. Ashcroft Ave, Fresno, CA 93722

	04/24/2023
Subcontractor Signature	**Date**
Whitney Reynolds	Sales & Service Representative
Print Name	**Title**

DBKO Design+Build, LLC – 3406 Via Lido, Suite 1a #24, Newport Beach, CA 92663

Signature-DBKO Design+Build	**Date**
Printed Name	Title

ALLIED DOCK PRODUCTS, INC.
3444 W. Ashcroft Avenue, Fresno, CA 93722
Ph: (559) 276-6505
E-mail: whitney@allieddock.com

DBKO+BUILD
3406 Via Lido, Suite 1a #24, Newport Beach, CA 92663
Ph: (559)930-3256

PROJECT# 2 1107
Maderal Industrial WHSE
325 S. Schnoor Ave, Madera CA 93637

INSTALLATION / OWNERS MANUALS

PORVENE MODEL 324
Rolling Commercial Slat Door

WARRANTY

ALLIED DOCK PRODUCTS, INC.
PORVENE DOORS

SHOP DRAWINGS / AS BUILTS

PORVENE DOORS
DOORS MODEL# 324

INSTALLATION INSTRUCTIONS

MODEL: 300 COMMERCIAL SLAT DOOR C-BRACKET

MORENO VALLEY, CA 92553

USE PORVENE DOORS PARTS ONLY - ALL OTHERS SHALL VOID WARRANTY

ALL PORVENE PRODUCTS MUST BE INSTALLED BY A LICENSED QUALIFIED PROFESSIONAL DOOR COMPANY TO QUALIFY FOR OUR WARRANTY. INSTALLATION WITHOUT PROPER TOOLS AND KNOWLEDGE CAN RESULT IN PERSONAL INJURY. THIS PAMPHLET IS DESIGNED TO ASSIST A PROFESSIONAL IN THE INSTALLATION OF PORVENE MODEL 300 SERIES DOORS. SAFETY IS FOREMOST. INSTALLATION SHOULD BE EXECUTED BY LICENSED QUALIFIED DOOR PROFESSIONALS. INSPECT ALL OF THE SHIPPED PARTS AND ACCOUNT FOR EVERYTHING BEFORE COMMENCING ANY WORK. FOR QUESTIONS AND TECHNICAL ASSISTANCE, CONTACT THE PORVENE ENGINEERING DEPARTMENT.

MAIN OFFICE & MANUFACTURING PLANT
14241 GRANT STREET
MORENO VALLEY, CA 92553
TOLL FREE TEL: (877) 906 - 3999
TOLL FREE FAX: (877) 343 - 6677

DISTRIBUTION CENTER
4119 SOUTH MARKET COURT
SACRAMENTO, CA 95834
TEL: (916) 437- 0401
FAX: (916) 437- 0403

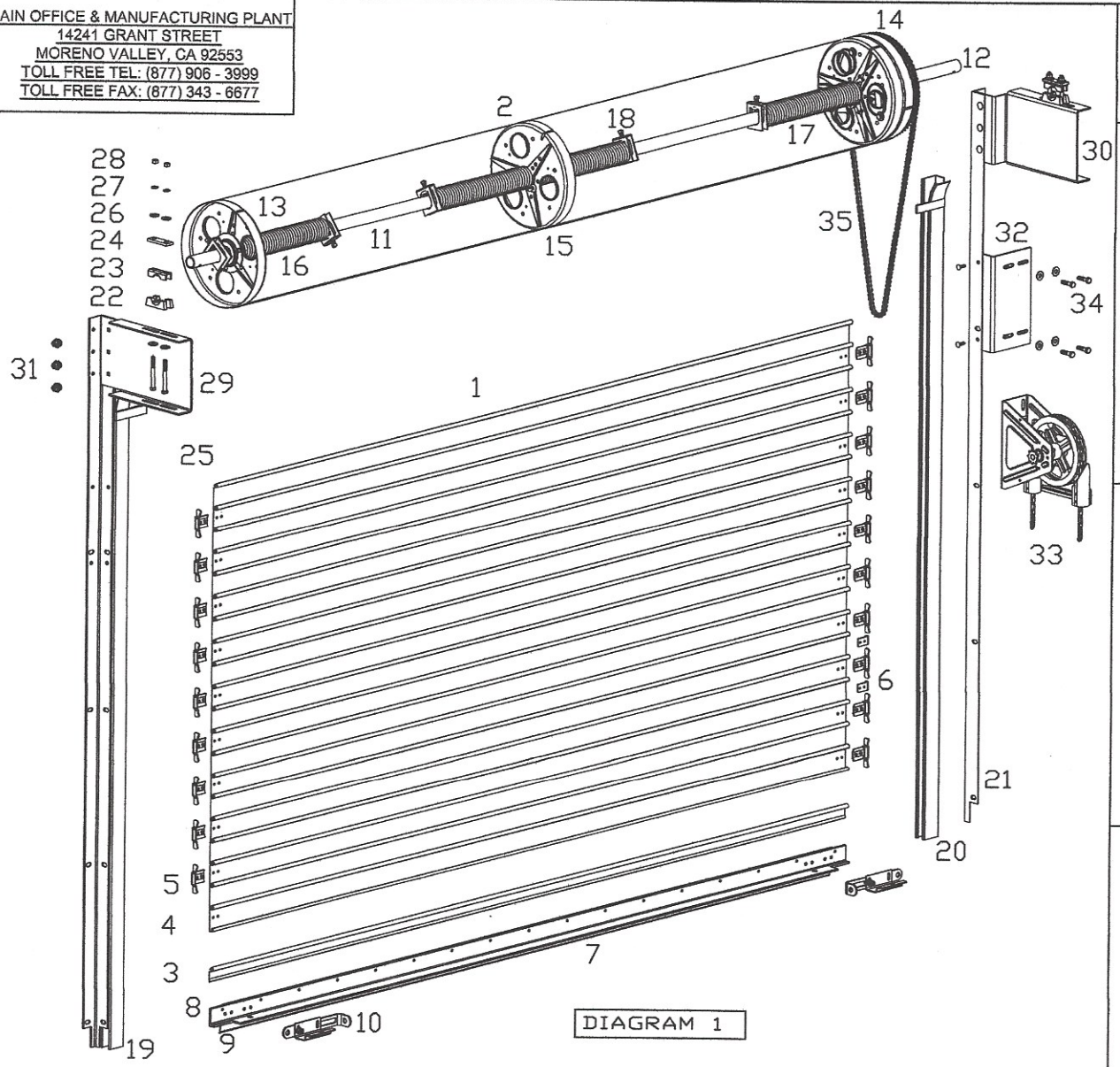

DIAGRAM 2

NON WINDLOCK GUIDE

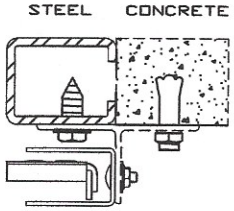

DIAGRAM 3

WINDLOCK GUIDE

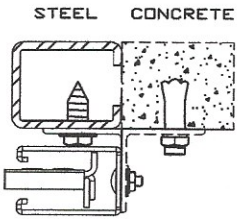

DIAGRAM 4

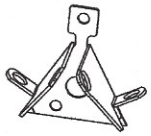

36

1	CURTAIN SUB-ASSEMBLY	VARIES		16	SPRING - L.H.	VARIES		31	BAG,FASTENER, C-BRACKET	710803
2	TOP SHEET	241006		17	SPRING - R.H.	VARIES		32	DNS WALL ANGLE BRKT	450152
3	STARTER/ENDING SLAT	VARIES		18	SPRING CLAMP ASSEMBLY	230003		33	DNS: OUTSIDE SPROCKET	460671
4	SLAT, CURVED/FLAT	VARIES		19	GUIDE CHANEL	VARIES		34	BAG, FASTENER DNS W. A.	710805
5	ENDLOCK	450103		20	GUIDE CHANEL, WINDLOCK	VARIES		35	CHAIN #41	440004
6	CLIP WINDLOCK	270504		21	WALL ANGLE	VARIES		36	CHAIN KEEPER 3-HOLE	420405
7	BOTTOM BAR SUB ASSEMBLY	VARIES		22	AXLE SADDLE CASTING	310101		37	LOCK, SLIDE BOLT: SLOTED	280104
8	BOTTOM ANGLE, 2"X2"X3/16"	VARIES		23	CLAMP AXLE	310103		38	CLIP, LIFT: SLIDE BOLT	280301
9	ASTRAGAL	270201		24	KEPPER PLATE	310102		39	SCREW PHILLIPS 1/4"-20X1	730301
10	SLIDE BOLT LOCK ASSY.	280105		25	BOLT, 3/8"-24 X 3 1/2"	730103		40	NUT, HEX 5/16"-18	740102
11	AXLE SUB-ASSEMBLY	VARIES		26	FLAT, WASHER	750103		41	NUT, SELF LOCKING NYLON	740201
12	AXLE PIPE	VARIES		27	LODK, WASHER	750203		42	WASHER, FLAT 1/4"	750101
13	FLANGE BEARING DRUM ASSY	220306		28	NUT, 3/8"-24	740104		43		
14	ELECTRIC OPERATOR KIT	440000		29	C - BRKT, NON DRIVE SIDE	450148		44		
15	DRUM INTERGRAL	220300		30	C-BRKT, DRIVE SIDE	450149		45		

IMPORTANT REMARKS

DO NOT CUT THE STEEL BANDS WHICH HOLD THE DOOR IN A ROLL. YOU WILL BE TOLD AT A LATER TIME EXACTLY WHEN TO CUT THEM. NO GUARANTEE WILL BE GIVEN OR RESPONSIBILITY ACCEPTED BY THE MANUFACTURER IF THE DOOR IS NOT INSTALLED AS INSTRUCTED. FOR PERFECT OPERATION, FOLLOW THE INSTRUCTIONS AS GIVEN. PLEASE REVIEW ALL THE STEPS BEFORE BEGINNING.

STEP 1 - PREPARATION

1.1- CHECK THE WIDTH AND HEIGHT OF THE DOOR OPENING WITH THE PACKING LIST.
1.2- CHECK IF THE DOOR JAMBS ARE PLUMB.
1.3- CHECK IF THE FLOOR AND HEADER ARE LEVEL.
1.4- CHECK DIMENSIONS FOR APPROPRIATE SIDE ROOM AND HEADROOM REQUIREMENTS.
1.5- THE WALL ANGLES IN STEP 2 MUST BE INSTALLED PLUMB AND LEVELTO EACH OTHER EVEN IF JAMB NOT PLUM AND FLOOR SLOPED.

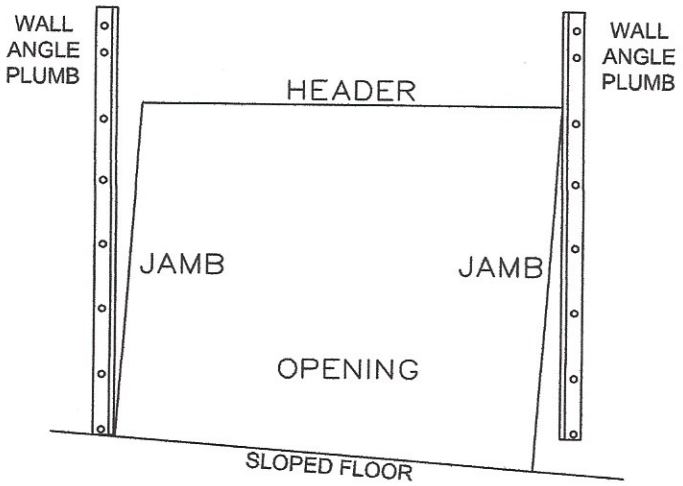

DIAGRAM 5

STEP 2 - WALL ANGLES

2.1- EVENLY SPACE WALL ANGLES OUTSIDE OPENING SO THAT THE DISTANCE BETWEEN THEM IS AS SHOWN BELOW.

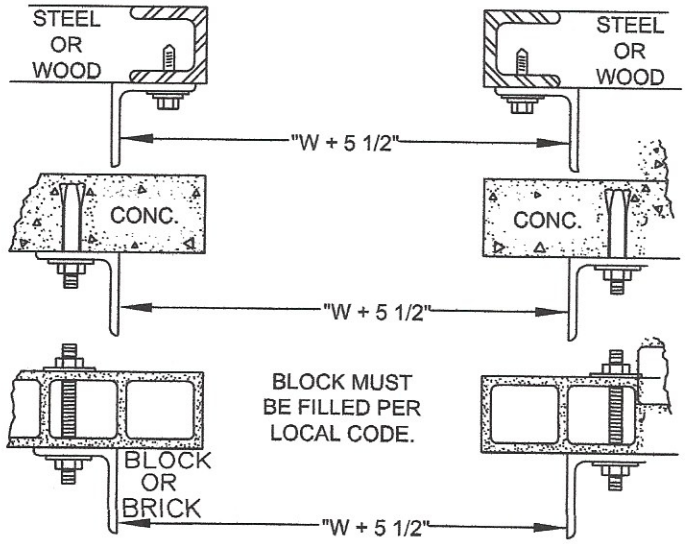

DIAGRAM 6

STEP 3 - INSTALL SUPPORT BRACKETS

3.1 - INSTALL C-BRACKETS TO WALL ANGLE:
FASTEN C-BRACKET DRIVE SIDE (30) TO C-BRACKET MOUNT DRIVE SIDE (450149-0) AND C-BRACKET NON-DRIVE SIDE (450148-0) TO WALL ANGLES AS SHOWN IN DIAGRAM 7

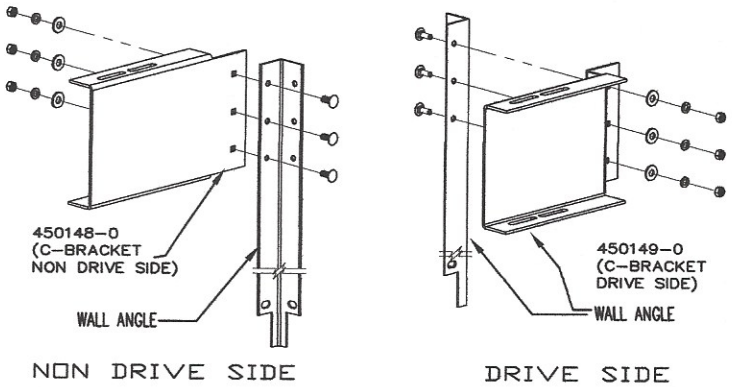

DIAGRAM 7

3.2- INSTALL DNS ANGLE MOUNT ONTO WALL ANGLE:
DRILL TWO 3/8" DIA. HOLES ON CHANNEL TO MATCH HOLES ON WALL ANGLE AND MOUNTING BRACKET. THEN FASTEN DNS ANGLE MOUNT TO WALL ANGLE. (DIAGRAM 8)

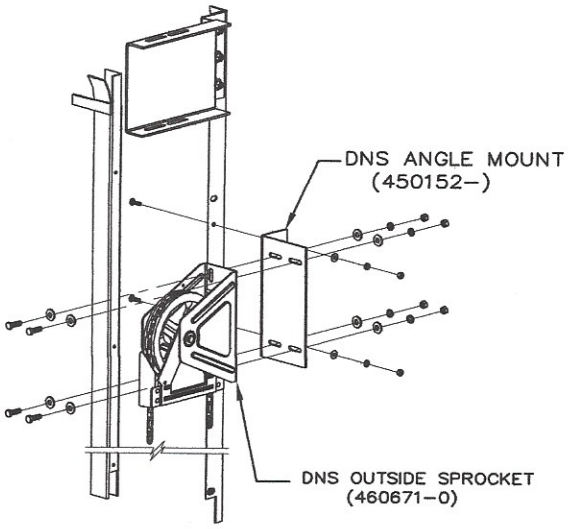

DIAGRAM 8

3.3- FASTEN DNS OUTSIDE SPROCKET (33) TO ANGLE MOUNT, FASTEN DNS WALL ANGLE BRACKET (32) AS SHOWN.

STEP 4 - INSTALL DOOR ASSEMBLY

4.1- LIFT THE DOOR ASSEMBLY UP ONTO THE DOOR SUPPOR BRACKETS, AS SHOWN IN DIAGRAM 9

DRIVE SIDE

4.2- PLACE THE SADDLE CASTING (22) UNDER THE AXLE. CENTER THE DOOR IN THE OPENING. IF SIDEWAYS MOVEMENT IS NECESSARY, BE CERTAIN THE DOOR CURTAIN AND THE AXLE MOVE TOGETHER.

4.3- AFTER PLACING AXLE SADDLES UNDER AXLE, PLACE THE TWO AXLE CLAMPS (23) KEEPER PLATES ON TOP OF THE AXLE. INSTALL 3/8" BOLTS (25) , FLAT WASHER (26), LOCK WASHER (27) AND NUT (28) AS SHOWN IN DIAGRAM 9

NON DRIVE SIDE

SAME PROCEDURE FOR NON DRIVE SIDE .

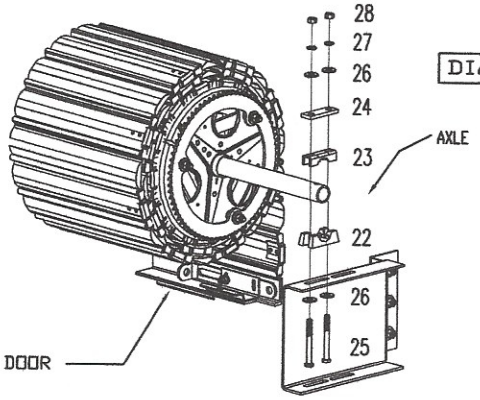

DIAGRAM 9

STEP 5 - PRE-TENSION SPRINGS

5.1- LOCATE AND SECURE CHAIN KEEPER (36) APPROXIMATELY 4'-0" ABOVE FLOOR, SEE DIAGRAM 4.

CAUTION: FAILURE TO SECURE CHAIN KEEPER OR FAILURE TO SECURE BOTH LEADS OF THE HAND CHAIN MAY RESULT IN PROPERTY DAMAGE AND/OR INJURY.

CAUTION: **DO NOT CUT THE BANDS** WHICH HOLD DOOR IN A ROLL. YOU WILL BE TOLD AT A LATER TIME EXACTLY WHEN TO CUT THEM. NO GUARANTEE WILL BE GIVEN OR RESPONSIBILITY ACCEPTED BY THE MANUFACTURER IF THE DOOR IS NOT INSTALLED AS INSTRUCTED

5.2- TENSION THE SPRINGS BY USING PIPE WRENCHES. TO ADD TENSION ROTATE THE AXLE 2 TURNS IN THE CLOCK-WISE DIRECTION (SEE DIAGRAM 10). DO NOT ALLOW BARREL TO ROTATE.

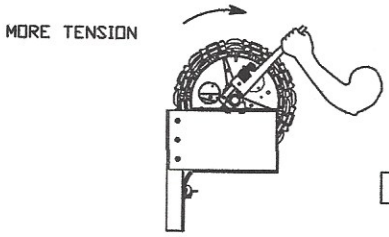

DIAGRAM 10

NOTE: YOU WILL REQUIRE TWO TECHNICIANS TO ADJUST THE DOOR TENSION SAFELY. (SEE FIGURE ABOVE - DIAGRAM 10)

WARNING: DO NOT RELEASE PIPE WRENCHES UNTIL AXLE CLAMPS ARE TIGHTENED SECURELY.

5.3- TIGHTEN BOTH AXLE CLAMPS SECURELY.

CAUTION: FAILURE TO SECURELY TIGHTEN BOTH AXLE CLAMPS WILL RESULT IN LOSS OF SPRING TENSION WHICH MAY CAUSE PROPERTY DAMAGE AND/OR INJURY.

5.4- WITH BOTTOM ANGLE IN THE DOWN POSITION, SECURELY TAKE HOLD OF THE BOTTOM ANGLE. CUT THE BANDS AND SLOWLY BRING THE CURTAIN TO GROUND LEVEL. SECURE THE CHAIN ON THE CHAIN KEEPER. MAKE SURE THE CURTAIN IS HANGING STRAIGHT UP AND DOWN , FOR IT MAY SHIFT DURING TRANSPORTATION. IF THE CURTAIN HAS SHIFTED, LIGHTLY TAP ENDLOCKS WITH HAMMER UNTIL THE CURTAIN IS STRAIGHT. ROLL THE CURTAIN BACK UP TO ABOUT 1/4 OPEN AND SECURE THE CHAIN ON THE CHAIN KEEPER.

STEP 6 - INSTALL DOOR STOPS AND SLIDE BOLT LOCKS

DIAGRAM 11

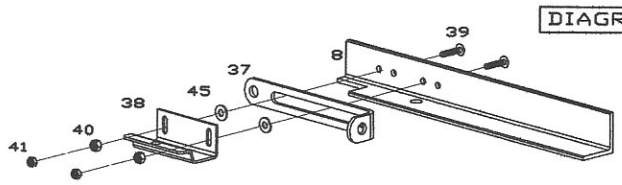

FOR STRUCTURAL GUIDES
USE NEXT SET OF HOLES

6.1 INSTALL THE DOOR STOP AND THE SLIDE BOLT LOCK (37) TO THE BOTTOM ANGLE (8) ON EACH SIDE OF THE DOOR USING THE APPROPRIATE HARDWARE AS SHOWN. (SEE DIAGRAM 11)

6.2 BRING DOOR BACK UP TO ABOUT ONE FOOT BELOW HEAD. SECURE CHAIN ON CHAIN KEEPER.

STEP 7 - INSTALL DOOR GUIDES

7.1 DETERMINE THE GUIDE TYPE PROVIDED. SELECT PROPER MOUNTING FOR STEEL, WOOD, OR CONCRETE AND NOTE THE CLEARANCE DIMENSIONS SHOWN IN DIAGRAM 6 .

7.2 GUIDES WILL BE FACTORY ASSEMBLED FOR CONCRETE JAMBS. TO RECONFIGURE FOR STEEL OR WOOD JAMBS, REMOVE ALL FASTENERS FROM WALL ANGLE AND REINSTALL THE U-CHANNEL AND ALL FASTENERS ON OPPOSITE SIDE OF WALL ANGLE.

7.3 SLIDE GUIDE ASSEMBLY OVER ENDS OF THE CURTAIN SO THAT THE HEAD STOP IS ABOVE BOTTOM ANGLE. MAINTAIN THE CLEARANCE BETWEEN CURTAIN AND GUIDE SHOWN IN DIAGRAM 6.
LOCATE POSITION OF TOP FASTENER ON WALL ANGLE AND INSTALL FASTENER. BRING CURTAIN DOWN TO 6" ABOVE FLOOR. LOCATE AND INSTALL BOTTOM FASTENER. THE GUIDE SHOULD BE PLUMB AT THIS POINT. LOCATE, DRILL, AND SECURE REMAINDER OF FASTENERS.

7.4 ALL GUIDE TYPES MOUNTING TO STEEL OR WOOD: INSTALL WALL ANGLE ONLY WITH FASTENERS PROVIDED AT THE DIMENSION SHOWN IN DIAGRAM 3. NEXT, SLIDE CHANNEL OR INNER & OUTER ANGLES AT THE ENDS OF CURTAIN AS EXPLAINED AT STEP 7.1. INSTALL FASTENERS TO WALL ANGLES.

NOTE: THE DOOR SHOULD MOVE UP AND DOWN EASILY. THE CLEARANCES BETWEEN THE GUIDE AND THE CURTAIN SHOULD BE APPROXIMATELY AS SHOWN. USE ADJUSTMENT IN WALL ANGLE TO OBTAIN THE PROPER CLEARANCES.

STEP 8 - CHECK AND ADJUST BALANCE

8.1 IF THE DOOR LOWERS EASILY AND IS DIFFICULT TO RAISE, MORE TENSION IS REQUIRED. IF THE DOOR LOWERS HARD AND RAISES EASILY, LESS TENSION IS REQUIRED (SEE DIAGRAM 12.)

CAUTION: BEFORE ADJUSTING THE SPRINGS, RAISE THE DOOR INTO THE UP POSITION.

8.2 SECURE THE DOOR IN THE UP POSITION BY ONE OF THE FOLLOWING METHODS:

1) TIE ROPES AROUND THE DOOR ROLL.
2) PLACE A CLAMP AT THE TOP OF THE GUIDE CHANNEL, BEFORE STOP, TO SECURE THE CURTAIN IN THE GUIDE.

WARNING: WHEN THE AXLE CLAMPS ARE LOOSENED, THE SPRING WILL BE VERY STRONG. YOU WILL REQUIRE TWO PEOPLE TO ADJUST THE DOOR TENSION SAFELY.

8.3 EACH TECHNICIAN SHOULD FIRMLY PLACE A LARGE PIPE WRENCH ON THE AXLE AS SHOWN IN DIAGRAM 10. LOOSEN THE AXLE CLAMPS AND PULL DOWN FOR MORE TENSION AND UP FOR LESS TENSION.

8.4 RE-TIGHTEN THE AXLE CLAMP HARDWARE.

8.5 REPEAT THE ABOVE STEPS IF FURTHER ADJUSTEMENT IS NECESSARY BEGINNING AT STEP 8.1.

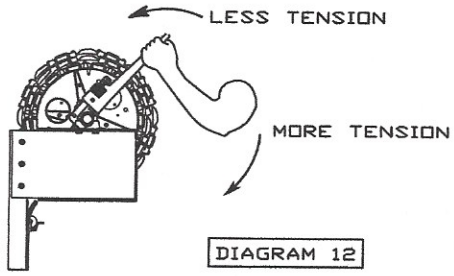

DIAGRAM 12

TROUBLESHOOTING

DOOR CURTAIN DRAGS IN GUIDES

- CHECK DOOR MOUNTING BRACKETS FOR LEVEL.
- ADJUST LOCATION OF GUIDES, SEE DIAGRAM 3
- DOOR DRUM ASSEMBLY MAY BE SET TOO CLOSE OR TOO FAR FROM WALL. THERE ARE SLOTS IN THE PIPE FOR ADJUSTMENT.
- ADJUST LEAD-IN BEND AT TOP OF GUIDES

DOOR DOES NOT CONTACT FLOOR LEVEL

- USE A SPIRIT LEVEL TO CHECK WHETHER THE DOOR OR THE FLOOR IS OUT OF LEVEL.
- CHECK THAT AXLE IS LOCATED IN THE SAME POSITION IN THE SLOTS ON THE MOUNTING BRACKETS.

STEP 9 - TOP DRAFT STOP

(*OPTIONAL)

9.1 PULL THE DOOR DOWN AND LOCK SECURELY. GO OUTSIDE AND MARK A LINE ON THE DOOR CURTAIN AS SHOWN.
(SEE DIAGRAM 13)

RAISE DOOR 2'-6" FROM FLOOR OR UNTIL THE MARKED LINE IS ACCESSIBLE.
PLACE TOP DRAFT STOP (63) IN POSITION AS SHOWN AND SECURE WITH SUPPLIED FASTENERS. STRETCH RUBBER SLIGHTLY AND SECURE OTHER END. LOCATE AND INSTALL THE REMAINDER OF FASTENERS AT 6" O.C.

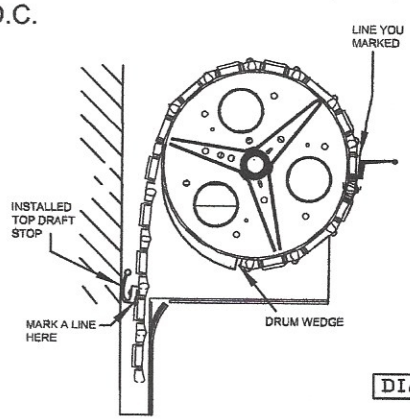

DIAGRAM 13

ALLIED DOCK PRODUCTS, INC.
3444 W. Ashcroft Avenue, Fresno, CA 93722
Ph: (559) 276-6505 Fax: (559) 271-0788
www.allieddock.com
tracy@allieddock.com

GUARANTEE/WARRANTY for DBKO+Build -Maderal Industrial WHSE Job #21107

We hereby warrant and guarantee that the Porvene Model 324 Rolling Commercial Slat Doors which we have installed in the Madera Industrial WHSE-DBKO Job #21107 has been done in accordance with the drawings and specifications and that the work as installed will fulfill the requirements of the guarantee/warranty included in the specifications. We agree to repair or replace any or all of our work, together with any other adjacent work which may be displaced by so doing, that may prove to be defective in its workmanship or materials within a period of one (1) year from the date of acceptance of the above-named structure by the owner, without any expense whatsoever to said owner, except for normal wear and tear and unusual abuse or neglect.

In the event of our failure to comply with the above-mentioned conditions within ten (10) days after being notified in writing by the Owner or General Contractor, we collectively or separately do hereby authorize the Owner or General Contractor to proceed to have said defects repaired and corrected at our expense and we will honor and pay the costs and charges therefore upon demand.

The date of filing the Notice of Completion will be considered the date of acceptance for the purpose of guarantees required, unless otherwise stated in the contract documents.

Allied Dock Products Inc. – 3444 W. Ashcroft Ave, Fresno, CA 93722

Subcontractor Signature	04/17/2023 **Date**
Whitney Reynolds **Print Name**	Sales & Service Representative **Title**

DBKO Design+Build, LLC – 3406 Via Lido, Suite 1a #24, Newport Beach, CA 92663

Signature-DBKO Design+Build	**Date**
Printed Name	Title

Limited Warranty

Series 100 / PV-Polyurethane / PV-Full View Aluminum / Series 200 / Series 300

Porvene Doors, Inc. warrants its Series 100, PV, 200, 233 and Series 300 Doors including Windlock doors and components to be free from defects in materials and workmanship for a period of 15 months from date of delivery to the original purchaser. PV-Polyurethane series warrants against delamination of the panels for 10 years from the date of delivery to the original purchaser. Porvene reserves the right to inspect any part alleged to be defective and to refuse any returned material unless the return was previously authorized by Porvene. Porvene's liability is limited hereunder to replacement of any part to be found defective, not including shipping, installation or labor charges and shall not be liable for any consequential or incidental damages. Porvene does not warranty damages resulting from any circumstances beyond the direct control of Porvene. All other warranties expressed or implied, including any implied warranty of merchantability, are hereby expressly excluded. Paint is baked on polyester for a commercial prime finish and might have superficial scratches which are considered as normal.

Series 400 / Series 500 / Series 600

Porvene Doors, Inc. warrants its Series 400, Series 500 and Series 600 doors including Windlock doors and components to be free from defects in materials and workmanship for a period of 24 months from date of delivery to the original purchaser. High cycle doors (50,000 to 75,000 cycles) must have a cycle counter. Porvene reserves the right to inspect any part alleged to be defective and to refuse any returned material unless the return was previously authorized by Porvene. Porvene's liability is limited hereunder to replacement of any part to be found defective, not including shipping, installation or labor charges and shall not be liable for any consequential or incidental damages. Porvene does not warranty damages resulting from any circumstances beyond the direct control of Porvene. All other warranties expressed or implied, including any implied warranty of merchantability, are hereby expressly excluded. Paint is baked on polyester for a commercial prime finish and might have superficial scratches which are considered as normal. Porvene does not warranty any grille or rolling steel door installed in apartment parking garage under a living area due to noise and vibration.

High Performance Doors / Springless Doors

Porvene Doors, Inc. warrants its HPD Grille, HPD 422 and 420 Rolling Steel and HPD 622 Insulated Rolling Steel and components to be free from defects in materials and workmanship for a period of 24 monts from date of delivery to the original purchaser. High cycle doors (100,000 to 300,000 cycles) must have a cycle counter. Porvene reserves the right to inspect any part alleged to be defective and to refuse any returned material unless the return was previously authorized by Porvene. Porvene's liability is limited hereunder to replacement of any part to be found defective, not including shipping, installation or labor charges and shall not be liable for any consequential or incidental damages. Porvene does not warranty damages resulting from any circumstances beyond the direct control of Porvene. All other warranties expressed or implied, including any implied warranty or merchantability, are hereby expressly excluded. Paint is baked on plyester for a commercial prime finish and might have superficial scratches which are considered as normal. Porvene does not warranty any High Performance Doors installed in apartment parking garage under a living area due to noise and vibration.

COPYRIGHT PORVENE DOORS, INC 8/13/2018

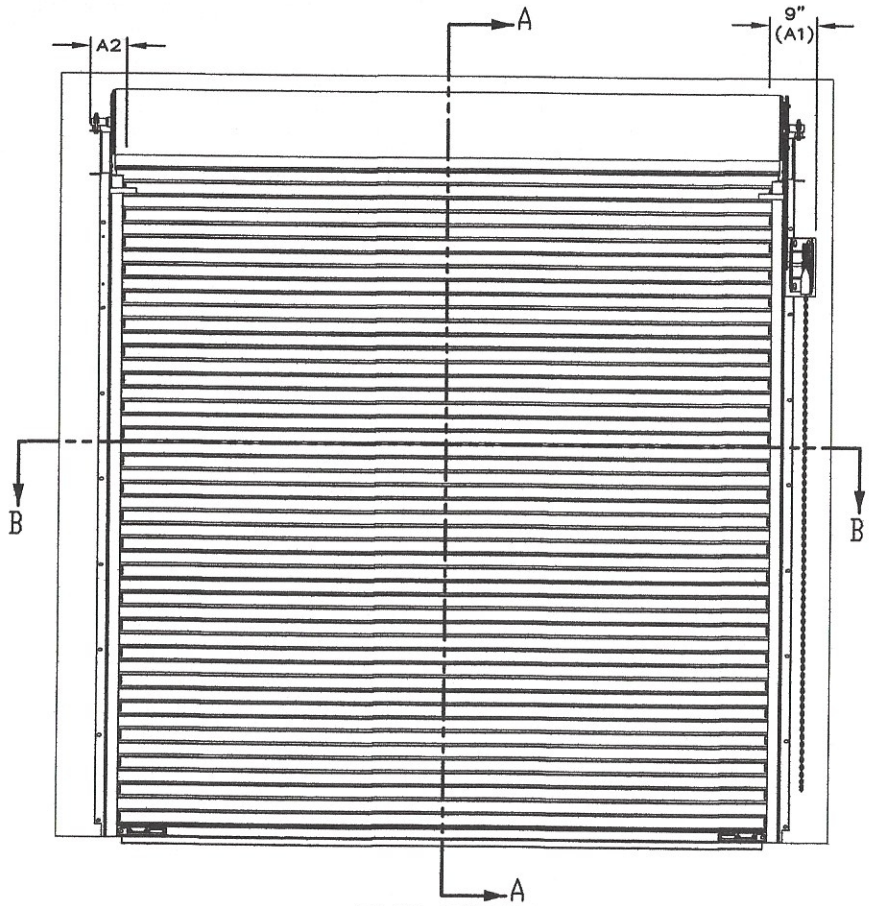

ELEVATION

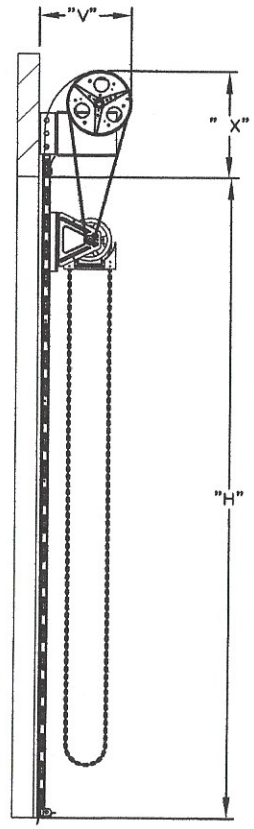

SECTION A-A

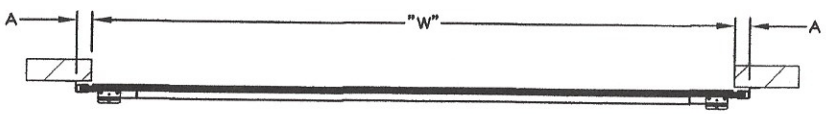

SECTION B-B

300ZCU-DNS

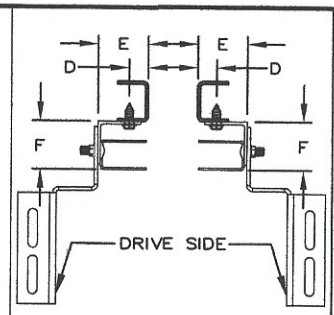

☐ E-GUIDE FOR STEEL/WOOD

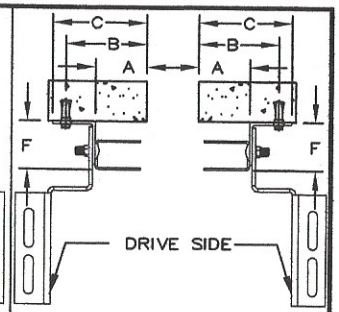

☐ Z-GUIDE FOR CONCRETE/MASONRY

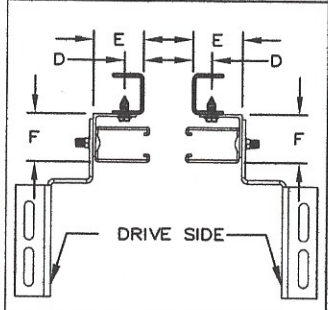

☐ E-GUIDE FOR WINDLOCK STEEL/WOOD

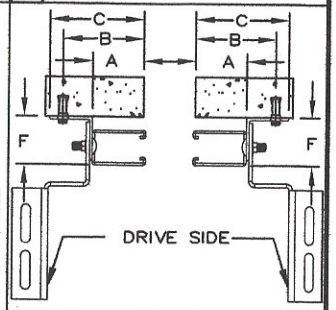

☐ Z-GUIDE FOR WINDLOCK CONCRETE/MASONRY

2 PC. GUIDE	A"	B"	C"	D"	E"	F"
	2 3/4		4 3/4		2 7/8	2 1/4
W. L. GUIDE	A"	B"	C"	D"	E"	F"
	2 3/4		4 3/4		2 7/8	2 1/4

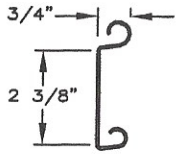

☐ ___ GAUGE FLAT SLAT

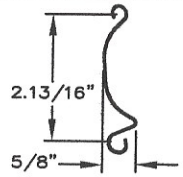

☐ ___ GAUGE CURVED SLAT

GENERAL NOTES RIGHT HAND SHOWN, LEFT HAND OPPOSITE

OPERATION	DNS REDUCTION	H MOTOR	MHS MOTOR	GH MOTOR
A1	9"	18"	18"	18"
A2	6 3/4"	6 3/4"	6 3/4"	6 3/4"

MRK.	QTY.	OPENING SIZE		OPERATION	RH / LH	CLEARANCES		OPTION
		WIDTH "W"	HEIGHT "H"			"X"	"V"	

PROJECT:
ARCHITECT:
CONTRACTOR:
DISTRIBUTOR:
DATE: SHEET: OF: BY: REF. #.

PORVENE® DOORS
MORENO VALLEY, CA 92553
(951) 653-3727

MODEL 300-COMMER. SLAT DOOR-C BRKT UNIVERSAL

NOTE: Porvene Doors is not responsible for improper installation procedures, structural backing, or field inspections of the project itself.

APPROVAL SIGNATURE: DATE:

SUBCONTRACTOR WARRANTY FORM

PROJECT: Madera Industrial WHSE (MIW)

LOCATION: 325 S. Schnoor Ave., Madera, Ca 93637

OWNER: Madera Industrial WHSE, LLC

GENERAL CONTRACTOR: DBKO Design+Build

We, Arreola Concrete, Subcontractor for DBKO Design+Build, do hereby warrant that all labor and materials furnished and work performed in conjunction with the above referenced project are in accordance with the Contract Documents and authorized modifications thereto, and will be free from defects due to defective materials or workmanship for a period of 1 year(s) from the Date of Substantial Completion.

Should any defect develop during the warranty period due to improper materials, workmanship or arrangement, the defect, including adjacent work displaced, shall be made good by the undersigned at no expense to the Owner.

The Owner will give Subcontractor written notice of defective work. Should Subcontractor fail to correct defective work within 60 days after receiving written notice, the Owner may, at his option, correct defects and charge Subcontractor costs for such correction. Subcontractor agrees to pay such charges upon demand.

FOR: Madera Industrial WHSE, LLC	FOR:
BY: David Arreola	BY:
TITLE: Owner	TITLE:
DATE: 4/24/23	DATE:

SUBCONTRACTOR WARRANTY FORM

PROJECT: Madera Industrial WHSE

LOCATION: 200 S Schnoor Ave Madera ca 93638

OWNER: Madera Industrial WHSE

GENERAL CONTRACTOR: DBKO DESIGN+BUILD

We, Cen Cal Steel Erectors, Inc., Subcontractor for DBKO DESIGN+BUILD, do hereby warrant that all labor and materials furnished and work performed in conjunction with the above referenced project are in accordance with the Contract Documents and authorized modifications thereto, and will be free from defects due to defective materials or workmanship for a period of 4/24/2023 year(s) from the Date of Substantial Completion.

Should any defect develop during the warranty period due to improper materials, workmanship or arrangement, the defect, including adjacent work displaced, shall be made good by the undersigned at no expense to the Owner.

The Owner will give Subcontractor written notice of defective work. Should Subcontractor fail to correct defective work within 60 days after receiving written notice, the Owner may, at his option, correct defects and charge Subcontractor costs for such correction. Subcontractor agrees to pay such charges upon demand.

FOR: Madera Industrial WHSE

BY: Robert Reynoso

TITLE: Principal

DATE: 4/24/2023

MANUFACTURER'S WARRANTY AND GUARANTEE

Project: DBKO Design Build
S. Schooner Ave. & W. Almond Ave.
Madera, CA 93637

Owner: DBKO Design Build
S. Schooner Ave. & W. Almond Ave.
Madera, CA 93637

Contractor: Custom Curb, Inc.
1731 Walter St., Ste. A
Ventura, CA 93003

Trade: Manufactured Skylights

Period: 10 YEARS

Warranty Begins: 4/24/2023

This Warranty inures to the benefit of the original purchaser of the skylight(s) only, is non-transferable and is subject to the terms and conditions set forth below.
ACRALIGHT SOLAR warrants the product listed above as supplied to the above-referenced project in the following capacity: This product is guaranteed to be free from defects in workmanship and material for the guarantee period noted above from the date of substantial completion and to be free from uncontrolled water penetration for the same period when installed in accordance with ACRALIGHT SOLAR'S recommendations.

The sole liability of ACRALIGHT SOLAR under this warranty is to repair or replace the defective product only, at a cost not to exceed the original purchase price of the product.

This warranty does not cover normal wear and tear or damage caused by misuse, neglect or accident. This warranty is void if the purchaser makes any alteration to the product. This warranty does not cover incidental or consequential damages to persons or property.

ACRALIGHT SOLAR reserves the right to make any changes or improvements to its products without incurring any obligation to similarly alter products previously purchased.

This Warranty gives the original purchaser specific legal rights. Although the original purchaser may have additional rights that vary from state-to-state.

THERE IS NO IMPLIED WARRANTY OF MERCHANTABILITY. THERE ARE NO WARRANTIES THAT EXTEND BEYOND THE DESCRIPTION ON THE FACE HEREOF. ALL OF ACRALIGHT SOLAR'S PRODUCTS ARE SOLD AS-IS.

ACRALIGHT SOLAR, LLC

Amy Conway

Amy Conway / Project Manager

4/20/23

Date:

Reference #

California Office
11932 Baker Place
Santa Fe Springs CA 90670

Phone: 562-696-1570
Fax: 562-945-8979
Web Site: www.acralight.com

SUBCONTRACTOR WARRANTY FORM

PROJECT: Madera Industrial

LOCATION: South Schnoor Ave Madera

OWNER: Madera Industrial Warehouse LLC

GENERAL CONTRACTOR:

We, DSE Steel, Subcontractor for DBKO, do hereby warrant that all labor and materials furnished and work performed in conjunction with the above referenced project are in accordance with the Contract Documents and authorized modifications thereto, and will be free from defects due to defective materials or workmanship for a period of 1 year(s) from the Date of Substantial Completion.

Should any defect develop during the warranty period due to improper materials, workmanship or arrangement, the defect, including adjacent work displaced, shall be made good by the undersigned at no expense to the Owner.

The Owner will give Subcontractor written notice of defective work. Should Subcontractor fail to correct defective work within 60 days after receiving written notice, the Owner may, at his option, correct defects and charge Subcontractor costs for such correction. Subcontractor agrees to pay such charges upon demand.

FOR: _____

BY: Angel Del Toro

TITLE: Owner

DATE: 4/24/23

SUBCONTRACTOR WARRANTY FORM

PROJECT: MADERA INDUSTRIAL WHSE (MIW)

LOCATION: 325 S. SCHNOOR AVE, MADERA CA 93637

OWNER: MADERA IMDUSTRIAL WHSE, LLC

GENERAL CONTRACTOR: DBKO Design + Build

We, GT PLUMBING, Subcontractor for DBKO Design + Build, do hereby warrant that all labor and materials furnished and work performed in conjunction with the above referenced project are in accordance with the Contract Documents and authorized modifications thereto, and will be free from defects due to defective materials or workmanship for a period of 1 year(s) from the Date of Substantial Completion.

Should any defect develop during the warranty period due to improper materials, workmanship or arrangement, the defect, including adjacent work displaced, shall be made good by the undersigned at no expense to the Owner.

The Owner will give Subcontractor written notice of defective work. Should Subcontractor fail to correct defective work within 60 days after receiving written notice, the Owner may, at his option, correct defects and charge Subcontractor costs for such correction. Subcontractor agrees to pay such charges upon demand.

FOR: GT PLUMBING

BY: Hans gah

TITLE: OWNER

DATE: 04/ 24/2023

Warranty

Henson General Engineering, Inc.

We the undersigned, do hereby warranty and guarantee that the work we have furnished and/or installed for

232 South Schnoor Ave. Madera, Ca. 93637

Is in accordance with Contract Documents and that all said work as installed meets or exceeds all the warranty and guarantee requirements. We agree to repair or replace any or all work installed by us, together with any adjacent work which is displaced or damaged by doing so, that proves to be defective in workmanship, material, or operation within a period of one (1) year from the date of acceptance of the project by owner, Substantial Completion Date is __4/24/23___. In the event of our failure to comply with the above-mentioned conditions within three (3) days after being notified by the General Contractor and/or Owner, General Contractor and/or Owner may elect to proceed to have said defects repaired and made good at our expense and we will honor and pay costs and charges therefore upon demand.

_____	Henson General Engineering, Inc,
Signature	Company
President / CEO	4/13/23
Title	Date

Local Representative for repair or replacement:

Name: **Henson General Engineering, Inc.**

Representative: **Bryan Henson**

Address: **PO Box 8123, Fresno, Ca. 93747**Phone Number: **559-859-5899**

SUBCONTRACTOR WARRANTY FORM

PROJECT: Madera Industrial WHSE (MIW)

LOCATION: 325-355 S. Schnoor, Madera, CA 93637

OWNER: Madera Industrial WHSE, LLC

GENERAL CONTRACTOR: DBKO DESIGN+BUILD

We, **Kerb Appeal Inc.**, subcontractor for **DBKO Design+Build** does hereby warrant that all labor and materials furnished and work performed in conjunction with the above referenced project are in accordance with the Contract Documents and authorized modifications thereto, and will be free from defects due to workmanship for **1-year** from the Date of Substantial Completion.
Ornamental Iron Gates **3-year** limited manufacturer warranty.
Liftmaster auto openers **5-year** limited manufacturer warranty.
Privacy Chain Link **10-year** limited manufacturer warranty against fading, breakage and red rust under normal use.

Should any defect develop during the warranty period due to improper materials, workmanship or arrangement, the defect, including adjacent work displaced, shall be made good by the undersigned at no expense to the Owner.

The Owner will give Subcontractor written notice of defective work. Should Subcontractor fail to correct defective work within 60 days after receiving written notice, the Owner may, at his option, correct defects and charge Subcontractor costs for such correction. Subcontractor agrees to pay such charges upon demand.

Signed:	Signed:
By: Tim Kerber	By:
Title: Owner	Title:
Date: 4/24/23	Date:

COMMERCIAL DC
VEHICULAR SLIDE GATE OPERATOR

INSTALLATION MANUAL

Model **CSL24UL**

OPERATOR REQUIRES A LIFTMASTER EXTERNAL MONITORED ENTRAPMENT PROTECTION DEVICE BE INSTALLED IN ALL ENTRAPMENT ZONES

- THIS PRODUCT IS TO BE INSTALLED AND SERVICED BY A TRAINED GATE SYSTEMS TECHNICIAN ONLY.
- This model is for use on vehicular passage gates ONLY and not intended for use on pedestrian passage gates.
- This model is intended for use in Class I, II, III and IV vehicular slide gate applications.
- Visit LiftMaster.com to locate a professional installing dealer in your area.
- This gate operator is compatible with MyQ® and Security+ 2.0® accessories.

Access installation and technical support guides or register this product

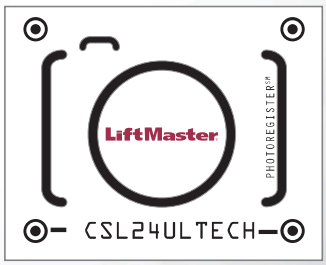

1. **Take a photo** of the camera icon including the points (⊙).
2. **Send it in** by texting the photo to 71403.

c UL US LISTED

LiftMaster
300 Windsor Drive
Oak Brook, IL 60523

LiftMaster® ELITE SERIES®

TABLE OF CONTENTS

SAFETY 2
Safety Symbol and Signal Word Review....2
Usage Class....3
UL325 Entrapment Protection Requirements....3
Safety Installation Information....4
Gate Construction Information....5

INTRODUCTION 6
Carton Inventory....6
Operator Specifications....7
Site Preparation....8

INSTALLATION 9
Types of Installations....9
Step 1 Determine Location for Operator....10
Step 2 Install the Operator....11
Step 3 Attach the Chain....12
Step 4 Install Entrapment Protection....14
Step 5 Earth Ground Rod....16
Step 6 Power Wiring....16
Step 7 Connect Batteries....18
Step 8 Dual Gate Setup....20
Step 9 Install the Cover....22

ADJUSTMENT 23
Limit and Force Adjustment....23
Obstruction Test....24

PROGRAMMING 25
Remote Controls (Not Provided)....25
LiftMaster Internet Gateway (not provided)....26
Erase All Codes....26
Erase Limits....26
Constant Pressure Override (CPO)....26
Gate Hold Open Feature....26
To Remove and Erase Monitored Entrapment Protection Devices....26

OPERATION 27
Gate Operator Setup Examples....27
Control Board Overview....28
Manual Disconnect....29
Reset Switch....29
Operator Alarm....29
Remote Control....29

ACCESSORY WIRING 30
External Control Devices....30
Locks....31
Miscellaneous Wiring....31

EXPANSION BOARD 32
Expansion Board Overview....32
Auxiliary Relay 1 and 2....33
Wiring Accessories to the Expansion Board....34

MAINTENANCE 35
Important Safety Instructions....35
Maintenance Chart....35
Batteries....36
Drive Train....36

TROUBLESHOOTING 37
Diagnostic Codes....37
Diagnostic Codes Table....38
Control Board LEDs....40
Troubleshooting Chart....41

APPENDIX 44
Step 6 Solar Panel(s)....44
SAMS Wiring With Relays Not Energized....48
Dual Gate Settings....48
Limit Setup With a Remote Control....49

WIRING DIAGRAM 50
REPAIR PARTS 51
ACCESSORIES 52
WARRANTY 54

SAFETY

Safety Symbol and Signal Word Review

When you see these Safety Symbols and Signal Words on the following pages, they will alert you to the possibility of ***Serious Injury or Death*** if you do not comply with the warnings that accompany them. The hazard may come from something mechanical or from electric shock. Read the warnings carefully.

When you see this Signal Word on the following pages, it will alert you to the possibility of damage to your gate and/or the gate operator if you do not comply with the cautionary statements that accompany it. Read them carefully.

IMPORTANT NOTE:

- *BEFORE attempting to install, operate or maintain the operator, you must read and fully understand this manual and follow all safety instructions.*
- *DO NOT attempt repair or service of your gate operator unless you are an Authorized Service Technician.*

⚠ WARNING

MECHANICAL

⚠ WARNING

ELECTRICAL

⚠ CAUTION

WARNING: This product can expose you to chemicals including lead, which are known to the State of California to cause cancer or birth defects or other reproductive harm. For more information go to *www.P65Warnings.ca.gov*.

Usage Class

Class I - Residential Vehicular Gate Operator

A vehicular gate operator (or system) intended for use in garages or parking areas associated with a residence of one-to four single families.

Class II - Commercial/General Access Vehicular Gate

A vehicular gate operator (or system) intended for use in a commercial location or building such as a multi-family housing unit (five or more single family units), hotel, garages, retail store, or other buildings accessible by or servicing the general public.

Class III - Industrial/Limited Access Vehicular Gate

A vehicular gate operator (or system) intended for use in an industrial location or building such as a factory or loading dock area or other locations not accessible by or intended to service the general public.

Class IV - Restricted Access Vehicular Gate Operator

A vehicular gate operator (or system) intended for use in a guarded industrial location or building such as an airport security area or other restricted access locations not servicing the general public, in which unauthorized access is prevented via supervision by security personnel.

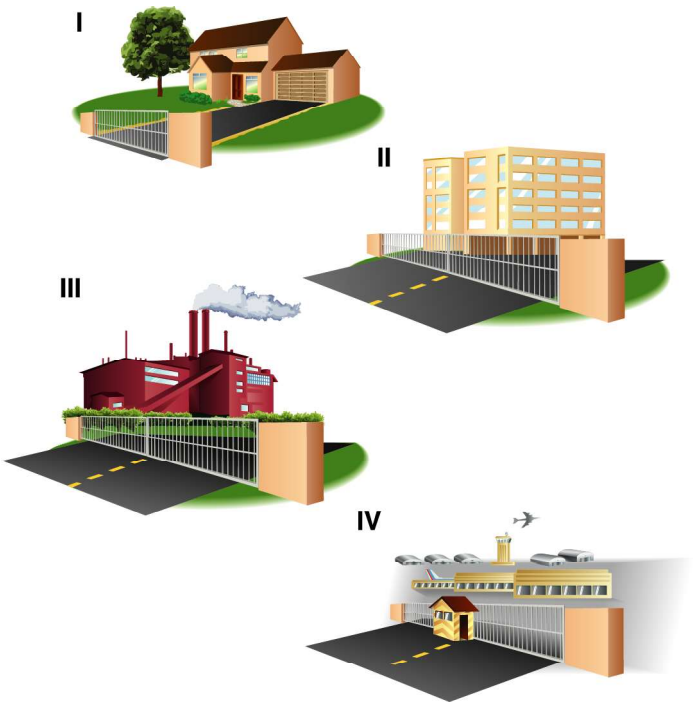

UL325 Entrapment Protection Requirements

- A **minimum of two** independent* monitored entrapment protection devices are required to be installed at each entrapment zone
- Every installation is unique. It is the responsibility of the installer to install external monitored entrapment protection devices in **each entrapment zone**
- This vehicular slide gate operator will operate only after installation of a **minimum of two** independent* monitored entrapment protection devices in each direction; two in the open direction and two in the close direction.
- Entrapment protection device types include inherent (built into the operator), monitored external photoelectric sensors or monitored external edge sensors
- This operator is provided with an inherent entrapment protection device built into the operator that serves as one of the two independent devices

* Independent - the same type of device shall NOT be used for both entrapment protection devices.

IMPORTANT SAFETY INSTRUCTIONS

⚠ WARNING

To reduce the risk of INJURY or DEATH:

- READ AND FOLLOW ALL INSTRUCTIONS.
- NEVER let children operate or play with gate controls. Keep the remote control away from children.
- ALWAYS keep people and objects away from the gate. NO ONE SHOULD CROSS THE PATH OF THE MOVING GATE.
- Test the gate operator monthly. The gate MUST reverse on contact with an object or reverse when an object activates the noncontact sensors. After adjusting the force or the limit of travel, retest the gate operator. Failure to adjust and retest the gate operator properly can increase the risk of INJURY or DEATH.
- Use the emergency release ONLY when the gate is not moving.
- KEEP GATES PROPERLY MAINTAINED. Read the owner's manual. Have a qualified service person make repairs to gate hardware.
- The entrance is for vehicles ONLY. Pedestrians MUST use separate entrance.
- **SAVE THESE INSTRUCTIONS.**

Safety Installation Information

1. Vehicular gate systems provide convenience and security. Gate systems are comprised of many component parts. The gate operator is only one component. Each gate system is specifically designed for an individual application.
2. Gate operating system designers, installers and users must take into account the possible hazards associated with each individual application. Improperly designed, installed or maintained systems can create risks for the user as well as the bystander. Gate systems design and installation must reduce public exposure to potential hazards.
3. A gate operator can create high levels of force in its function as a component part of a gate system. Therefore, safety features must be incorporated into every design. Specific safety features include:
   - Edges Sensors (contact)
   - Guards for Exposed Rollers
   - Photoelectric Sensors
   - Screen Mesh
   - Vertical Posts
   - Instructional and Precautionary Signage
4. Install the gate operator only when:
   a. The operator is appropriate for the construction and the usage class of the gate.
   b. All openings of a horizontal slide gate are guarded or screened from the bottom of the gate to a minimum of 6 feet (1.8 m) above the ground to prevent a 2-1/4 inches (6 cm) diameter sphere from passing through the openings anywhere in the gate, and in that portion of the adjacent fence that the gate covers in the open position.
   c. All exposed pinch points are eliminated or guarded, and guarding is supplied for exposed rollers.
5. The operator is intended for installation only on gates used for vehicles. Pedestrians must be supplied with a separate access opening. The pedestrian access opening shall be designed to promote pedestrian usage. Locate the gate such that persons will not come in contact with the vehicular gate during the entire path of travel of the vehicular gate.
6. The gate must be installed in a location so that enough clearance is supplied between the gate and adjacent structures when opening and closing to reduce the risk of entrapment.
7. The gate must be properly installed and work freely in both directions prior to the installation of the gate operator.
8. Permanently mounted access controls intended for users to activate, must be located at least 6 feet (1.8 m) away from any moving part of the gate and where the user is prevented from reaching over, under, around or through the gate to operate the controls. Outdoor or easily accessible controls shall have a security feature to prevent unauthorized use. Exception: Emergency access controls only accessible by authorized personnel (e.g. fire, police) may be placed at any location in the line-of-sight of the gate.
9. The Stop and/or Reset (if provided separately) must be located in the line-of-sight of the gate. Activation of the reset control shall not cause the operator to start.
10. A minimum of two (2) WARNING SIGNS shall be installed in the area of the gate. Each placard is to be visible by persons located on the side of the gate on which the placard is installed.
11. For a gate operator utilizing a non-contact sensor:
    a. Reference owner's manual regarding placement of non-contact sensor for each type of application. See Install Entrapment Protection section.
    b. Care shall be exercised to reduce the risk of nuisance tripping, such as when a vehicle trips the sensor while the gate is still moving.
    c. One or more non-contact sensors shall be located where the risk of entrapment or obstruction exists, such as the perimeter reachable by a moving gate or barrier.
12. For a gate operator utilizing a contact sensor such as an edge sensor:
    a. One or more contact sensors shall be located where the risk of entrapment or obstruction exists, such as at the leading edge, trailing edge and post mounted both inside and outside of a vehicular horizontal slide gate.
    b. A hard wired contact sensor shall be located and its wiring arranged so the communication between the sensor and the gate operator is not subject to mechanical damage.
    c. A wireless device such as one that transmits radio frequency (RF) signals to the gate operator for entrapment protection functions shall be located where the transmission of the signals are not obstructed or impeded by building structures, natural landscaping or similar obstruction. A wireless device shall function under the intended end-use conditions.

Gate Construction Information

Vehicular gates should be installed in accordance with ASTM F2200: Standard Specification for Automated Vehicular Gate Construction. For a copy, contact ASTM directly at 610-832-9585 or www.astm.org.

1. General Requirements

1.1 Gates shall be constructed in accordance with the provisions given for the appropriate gate type listed, refer to ASTM F2200 for additional gate types.

1.2 Gates shall be designed, constructed and installed to not fall over more than 45 degrees from the vertical plane, when a gate is detached from the supporting hardware.

1.3 Gates shall have smooth bottom edges, with vertical bottom edged protrusions not exceeding 0.50 inches (12.7 mm) when other than the exceptions listed in ASTM F2200.

1.4 The minimum height for barbed tape shall not be less than 8 feet (2.44 m) above grade and for barbed wire shall not be less than 6 feet (1.83 m) above grade.

1.5 An existing gate latch shall be disabled when a manually operated gate is retrofitted with a powered gate operator.

1.6 A gate latch shall not be installed on an automatically operated gate.

1.7 Protrusions shall not be permitted on any gate, refer to ASTM F2200 for Exceptions.

1.8 Gates shall be designed, constructed and installed such that their movement shall not be initiated by gravity when an automatic operator is disconnected, in accordance with the following.

1.8.1 Vehicular horizontal slide gate. Shall not result in continuous, unimpeded movement in either lineal direction of its travel.

1.9 For pedestrian access in the vicinity of an automated vehicular gate, a separate pedestrian gate shall be provided. The pedestrian gate shall be installed in a location such that a pedestrian shall not come in contact with a moving vehicular access gate. A pedestrian gate shall not be incorporated into an automated vehicular gate panel.

2. Specific Applications

2.1 Any non-automated gate that is to be automated shall be upgraded to conform to the provisions of this specification.

2.2 This specification shall not apply to gates generally used for pedestrian access and to vehicular gates not to be automated.

2.3 When the gate operator requires replacement, the existing gate shall be upgraded to conform to the provisions of this specification.

2.4 When the gate of an automated gate system requires replacement, the new gate shall conform to the provisions of this specification.

3. Vehicular Horizontal Slide Gates

3.1 The following provisions shall apply to Class I, Class II and Class III vehicular horizontal slide gates:

3.1.1 All weight bearing exposed rollers 8 feet (2.44 m), or less, above grade shall be guarded or covered.

3.1.2 All openings shall be designed, guarded, or screened from the bottom of the gate to the top of the gate or a minimum of 6 ft. (1.83 m) above grade, whichever is less, to prevent a 2 1⁄4 in. (57 mm) diameter sphere from passing through the openings anywhere in the gate, and in that portion of the adjacent fence that the gate covers in the open position. The gate panel shall include the entire section of the moving gate,including any back frame or counterbalance portion of the gate.

3.1.3 A gap, measured in the horizontal plane parallel to the roadway, between a fixed stationary object nearest the roadway, (such as a gate support post) and the gate frame when the gate is in either the fully open position or the fully closed position, shall not exceed 2 1/4 inches (57 mm). Exception: All other fixed stationary objects greater than 16 in. (406 mm) from the gate frame shall not be required to comply with this section.

3.1.4 Positive stops shall be required to limit travel to the designed fully open and fully closed positions. These stops shall be installed at either the top of the gate, or at the bottom of the gate where such stops shall horizontally or vertically project no more than is required to perform their intended function.

3.1.5 All gates shall be designed with sufficient lateral stability to assure that the gate will enter a receiver guide, refer to ASTM F2200 for panel types.

3.2 The following provisions shall apply to Class IV vehicular horizontal slide gates:

3.2.1 All weight bearing exposed rollers 8 feet (2.44 m), or less, above grade shall be guarded or covered.

3.2.2 Positive stops shall be required to limit travel to the designed fully open and fully closed positions. These stops shall be installed at either the top of the gate, or at the bottom of the gate where such stops shall horizontally or vertically project no more than is required to perform their intended function.

Carton Inventory

NOT SHOWN: Documentation Packet, Chain #41 - 30 feet, Eye Bolt Kit

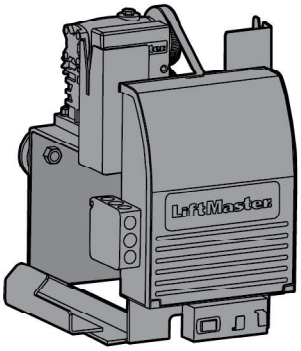

Operator

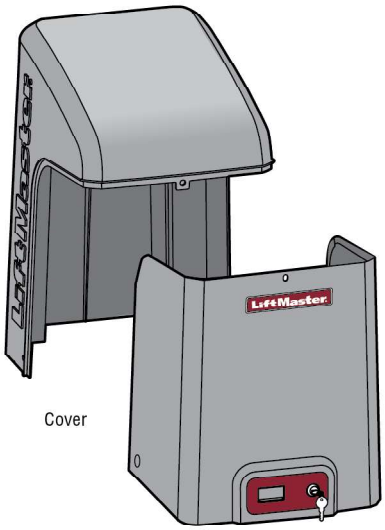

Cover

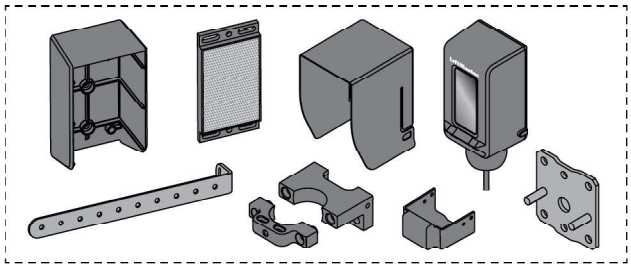

LiftMaster Monitored Retro-Reflective Photoelectric Sensor Model LMRRUL

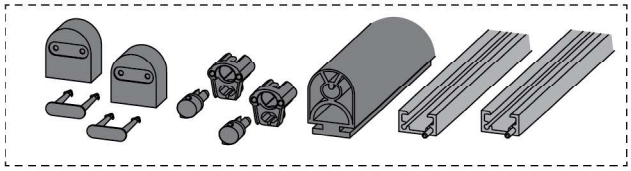

5 ft. Edge sensor kit

Warning Signs (2) and Warranty Card

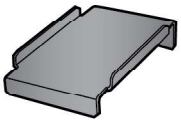

Battery Tray

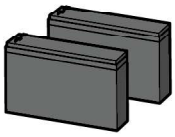

Battery 12 Vdc 7AH (2)

Key (2)

Operator Specifications

Usage Classification	Class I, II, III, & IV
Main AC Supply	120 Vac, 4 Amps (10 Amps including Accessory Outlets) **OR** 240 Vac, 2 Amps When Optional Transformer Kit Model 3PHCONV is installed in the field, operator is rated 208/240/480/575 VAC, 4.8/4.2/2.1/1.7 A, 60 Hz, 1 PH
System Operating Voltage	24 Vdc Transformer Run / Battery Backup
Accessory Power	24 Vdc, 500mA max. for ON + SW (switched)
Solar Power Max	24 Vdc at 60 watts max.
Maximum Gate Weight	1500 lbs. (680.4 kg)
Minimum Gate Travel Distance	4 feet (1.2 m)
Maximum Gate Travel Distance	50 feet (15.24 m)
Maximum Gate Travel Speed	1 foot/second
Maximum Daily Cycle Rate	Continuous
Maximum Duty Cycle	Continuous
Operating Temperature	Without Heater: -20°C to 60°C (-4°F to 140°F) With Optional Heater: -40°C to 60°C (-40°F to 140°F)
Expansion Board	Provided
External Entrapment Protection Device Inputs (non-contact and/or contact)	Main board - up to 2 close entrapment protection devices and 1 open entrapment protection device. Expansion board - up to 3 entrapment protection devices configurable to either close or open and up to 4 edge sensors using wireless edge sensor kit model LMWEKITU .

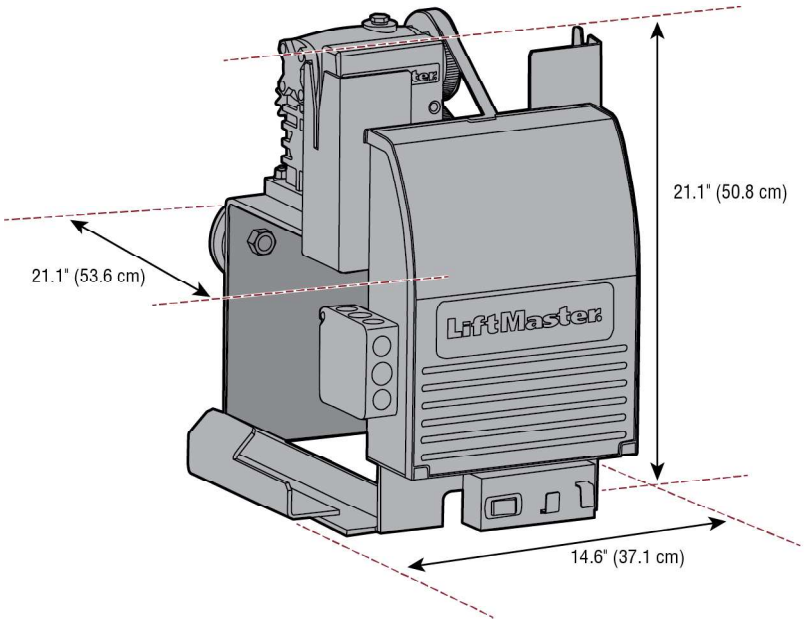

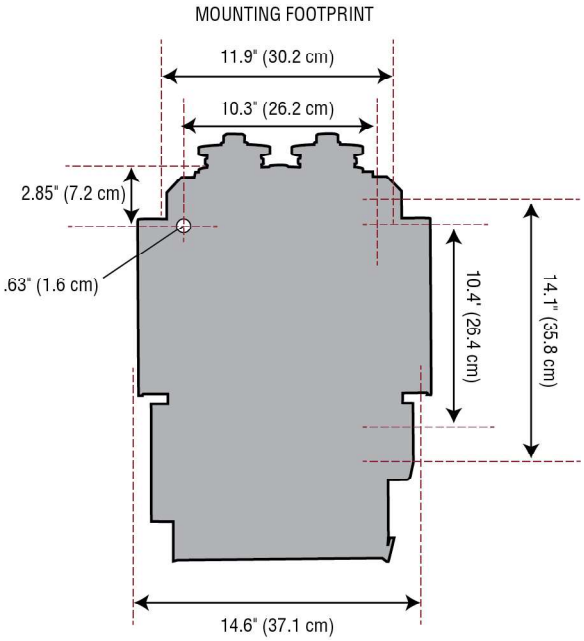

Site Preparation

Check the national and local building codes **BEFORE** installation.

Conduit and Concrete Pad

Trench and install conduit. Before trenching, contact underground utility locating companies. Conduit must be UL approved for low and high voltage. Consider the operator placement BEFORE installing the pad or post.

Safety

Entrapment protection devices are required to protect against any entrapment or safety conditions encountered in your gate application. Install a warning sign (two provided) on the inside and outside of the property, where easily visible.

Gate

Gate must be constructed and installed according to ASTM F2200 standards (refer to page 4). Gate must fit specifications of operator (refer to specifications).

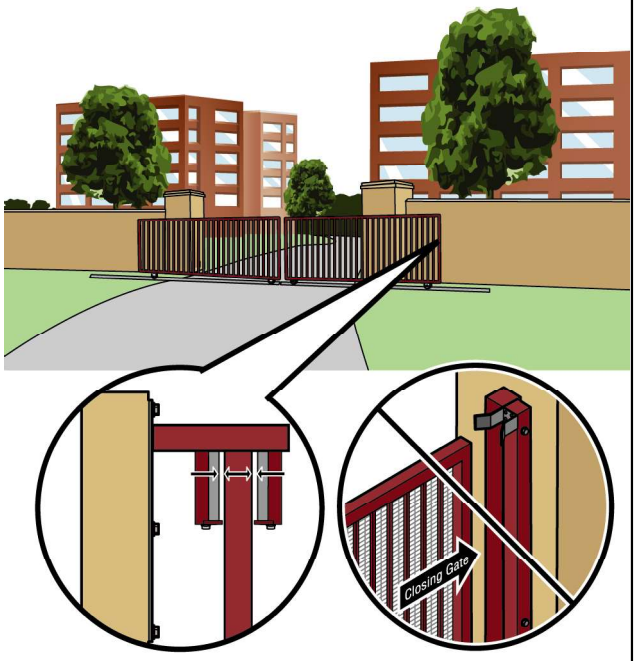

SAFETY CATCH ROLLERS
Install catch rollers with safety covers on the side of a post or wall with a minimal distance of half an inch between the rollers and gate

DO NOT use a gate catch post. Because the coasting distance may vary due to changes in temperature, it is NOT recommended to install a catch post in front of the gate's path. To do so will cause the gate to hit the post in certain instances.

Additional Accessories

The vehicle loops allow the gate to stay open when vehicles are obstructing the gate path. Suggested for vehicles 14 feet (4.27 m) or longer. Vehicle loops are not required but are recommended. Before installing your Access Control Device(s) be sure to complete a site survey and determine the best device for your site needs.

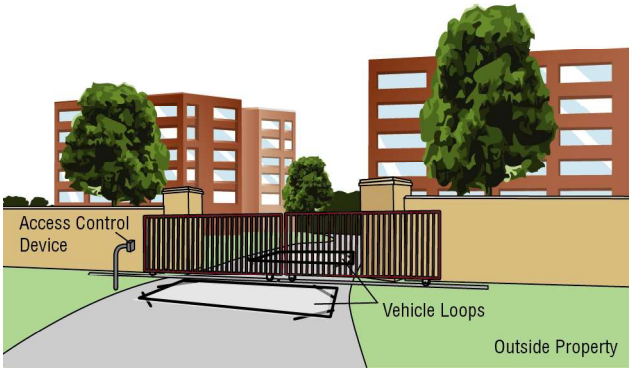

⚠ CAUTION

- To AVOID damaging gas, power or other underground utility lines, contact underground utility locating companies BEFORE digging more than 18 inches (46 cm) deep.
- ALWAYS wear protective gloves and eye protection when changing the battery or working around the battery compartment.

Types of Installations

Standard Installation

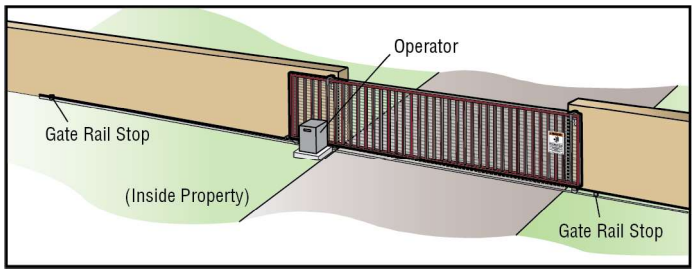

Rear Installation

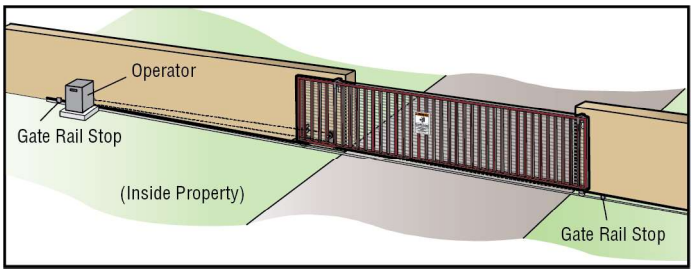

Step 1 Determine Location for Operator

Check the national and local building codes before installation.

Standard Installation

1. The gate operator should be installed near the front roller of the gate. Lay out the concrete pad.
2. Install the electrical conduit.
3. Pour a concrete pad (reinforced concrete is recommended).

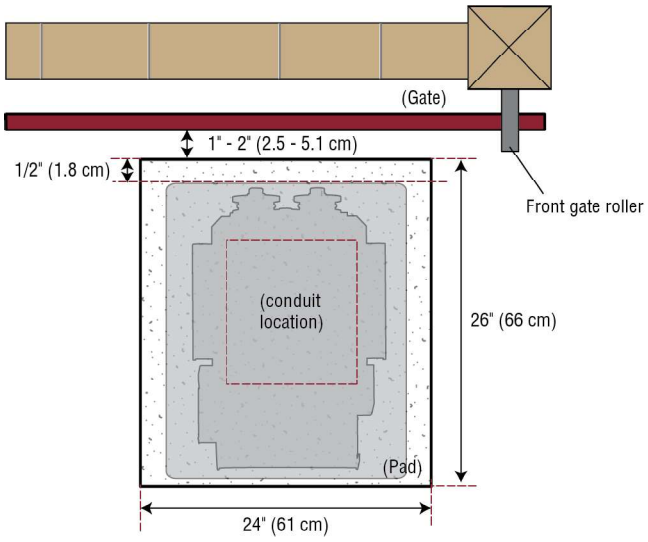

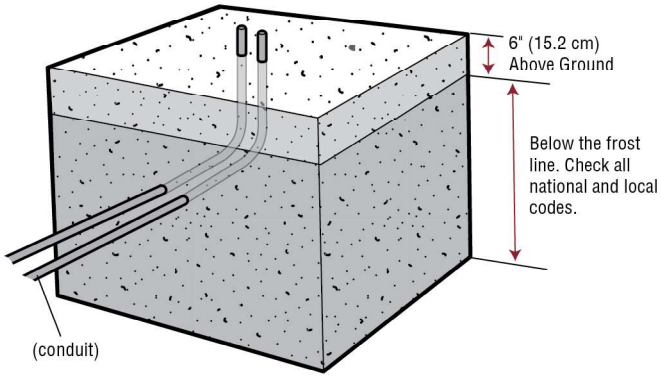

Rear Installation

1. The gate operator should be installed near the back of the gate in the OPEN position. Lay out the concrete pad.
2. Install the electrical conduit.
3. Pour a concrete pad (reinforced concrete is recommended).

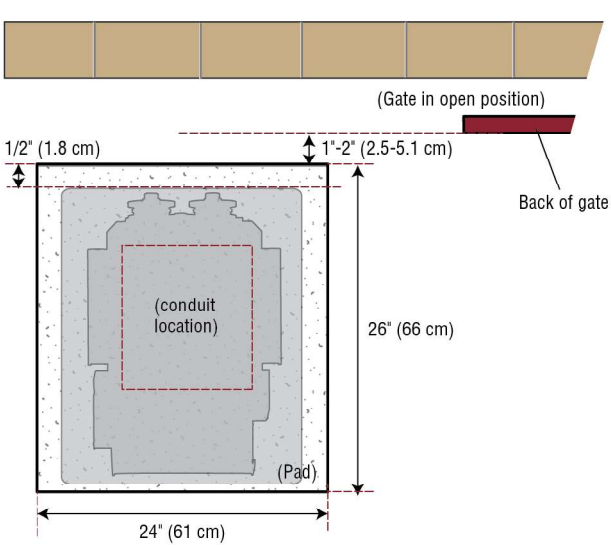

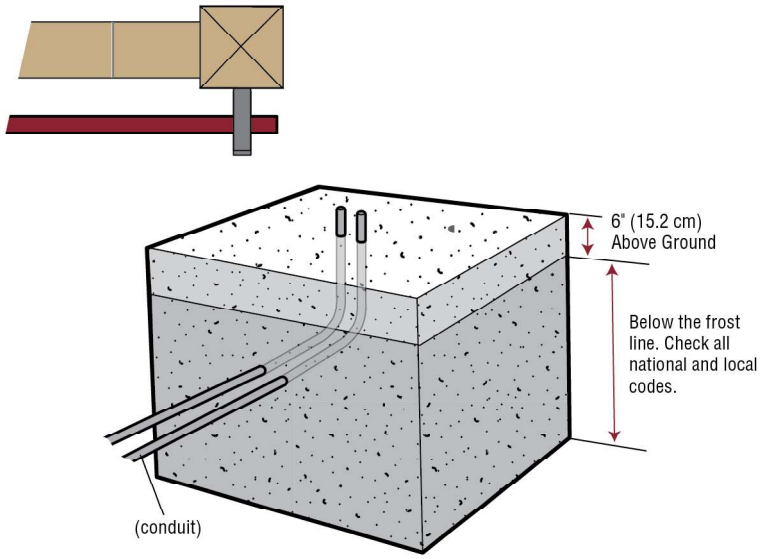

Step 2 Install the Operator

Attach the operator to the concrete pad with appropriate fasteners. The gate operator should be installed near the front roller of the gate or near the back of the gate (in the OPEN position). The space between the gate and the output sprocket must be a minimum of 4 inches (10.2 cm). ***NOTE:*** *An alternative to a concrete pad is to post mount the operator (refer to Accessories).*

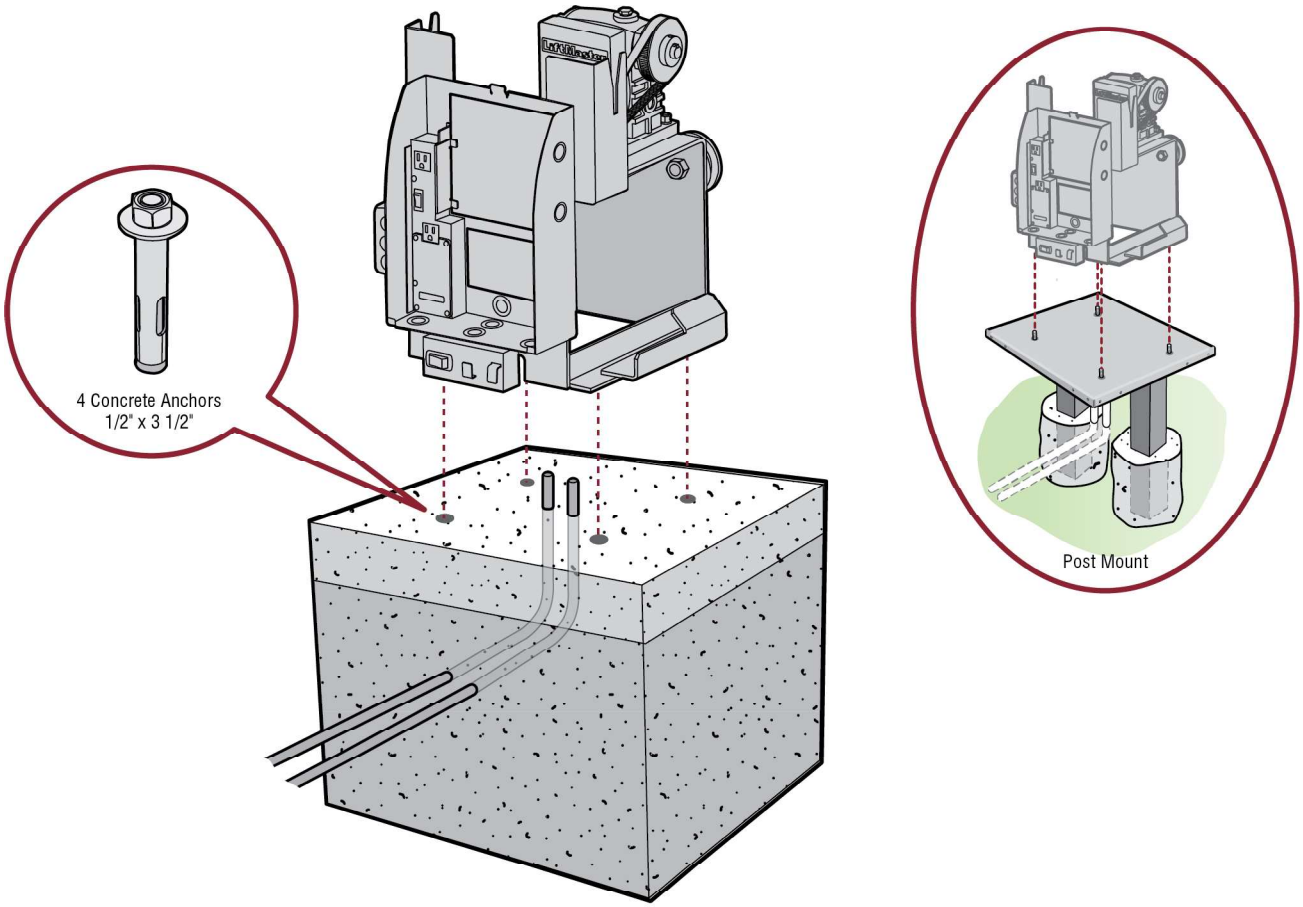

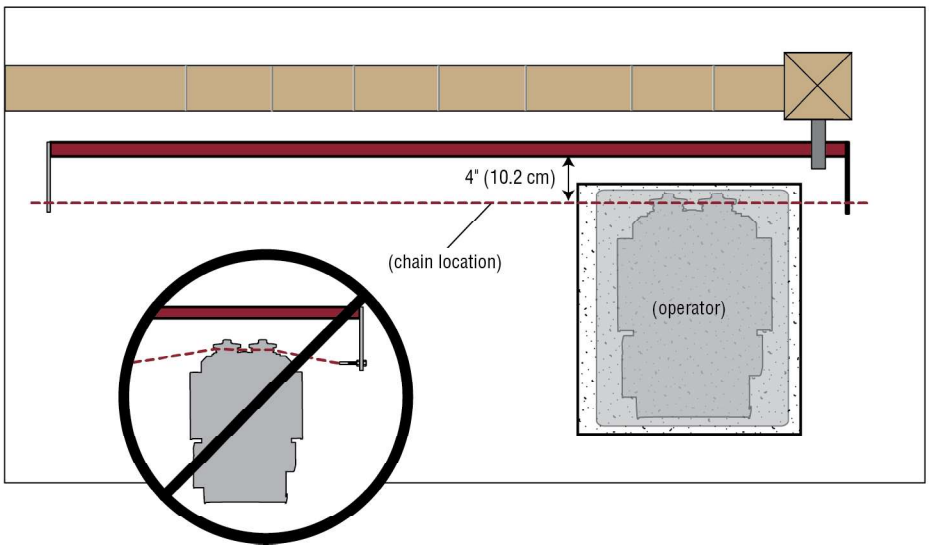

Step 3 Attach the Chain

Standard Installation

DO NOT run the operator until instructed.

1. Manually open the gate and line up the front bracket so the chain will be level with the idler pulley and parallel to the ground. Weld the front bracket in this position.
2. Manually close the gate and line up the rear bracket so the chain will be level with the idler pulley and parallel to the ground. Weld the rear bracket in this position.
3. Route the chain through the operator.
4. Connect the chain to the brackets using the eye bolt hardware. Chain should not be too tight or have excessive slack.
5. Remove the pin from the vent plug on the gear box.

NOTE: *The chain should have no more than 1 inch (2.5 cm) of sag for every 10 feet (3 m) of chain length.*

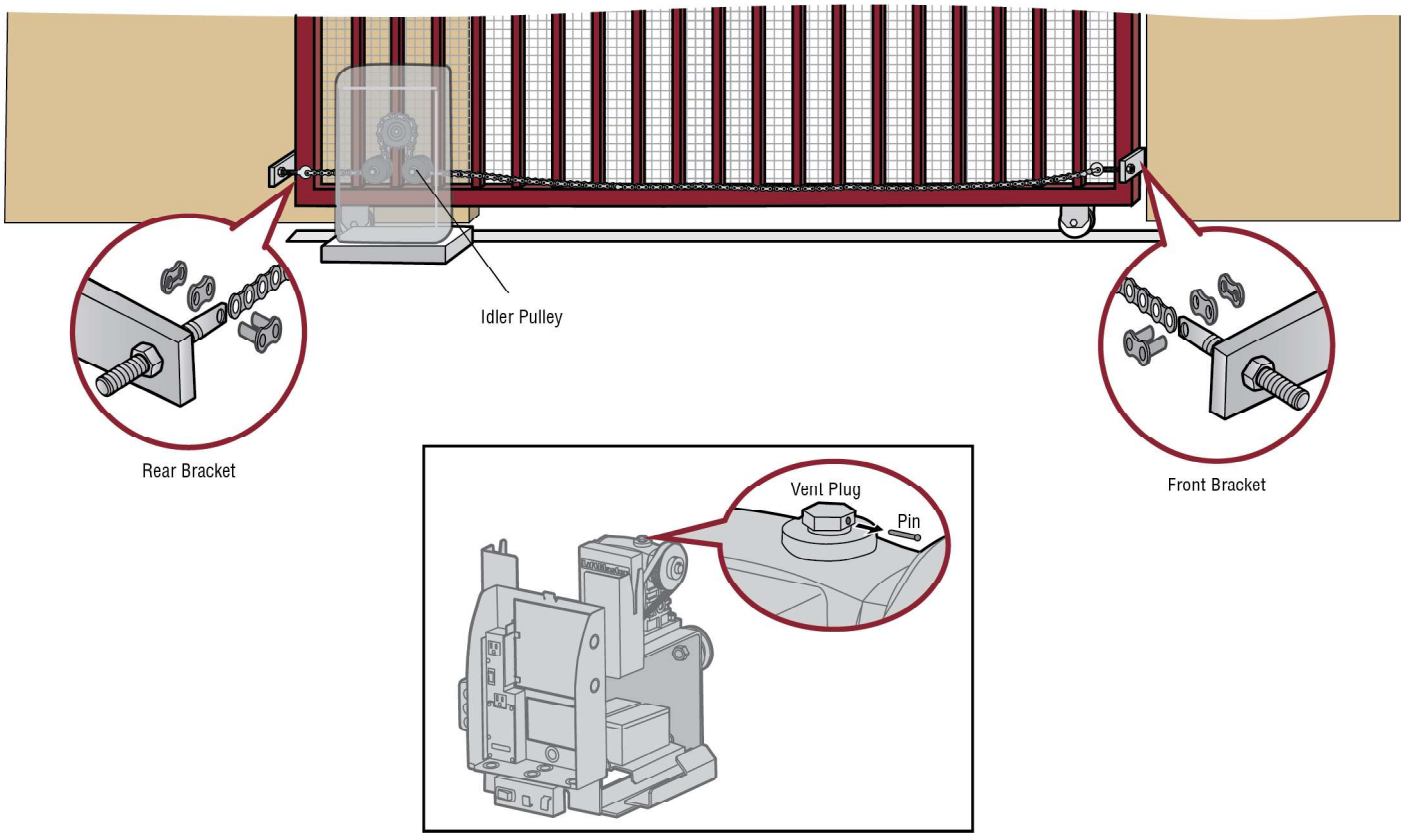

Rear Installation

DO NOT run the operator until instructed.

NOTE: *This installation will require two extra idler pulleys. Make sure all exposed pinch points are guarded. Refer to Gate Construction Information on page 4.*

1. Move the back pulley to the bottom hole in the operator.
2. Manually close the gate and align the bottom bracket so the chain will be level with the bottom idler pulley and parallel to the ground. Weld the bottom bracket in this position.
3. Align the top bracket so the chain will be level with the top idler pulley and parallel to the ground. Weld the upper bracket in this position.
4. Route the chain through the operator.
5. Connect the chain to the brackets using the eye bolt hardware. Chain should not be too tight or have excessive slack.
6. Remove the pin from the vent plug on the gear box.

NOTE: *The chain should have no more than 1 inch (2.5 cm) of sag for every 10 feet (3 m) of chain length.*

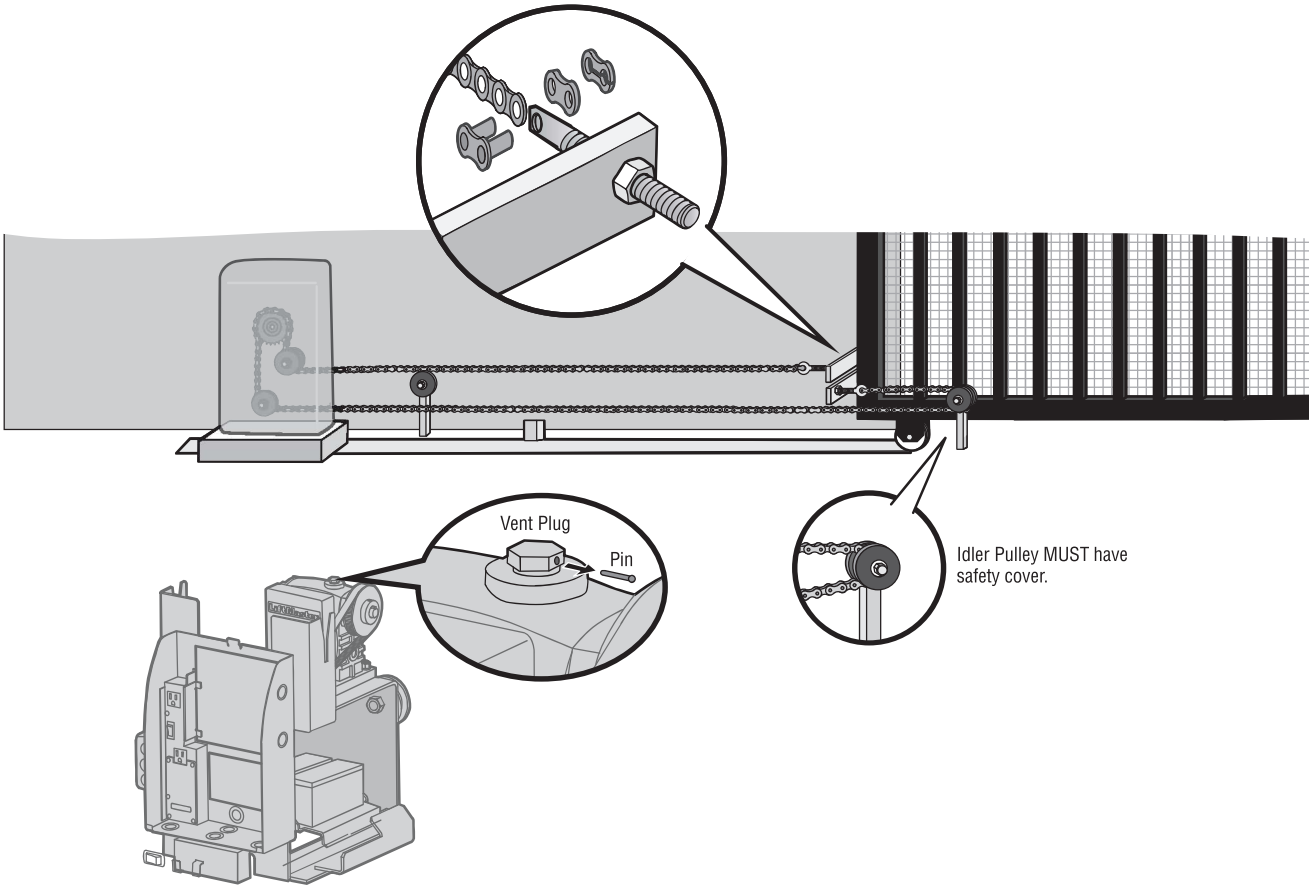

⚠ WARNING

To prevent SERIOUS INJURY or DEATH from a moving gate:

- ALL gate operator systems REQUIRE two independent entrapment protection systems for each entrapment zone.
- Entrapment protection devices MUST be installed to protect anyone who may come near a moving gate.
- Locate entrapment protection devices to protect in BOTH the open and close gate cycles.
- Locate entrapment protection devices to protect between moving gate and RIGID objects, such as posts, walls, pillars, columns, or operator itself.

Step 4 Install Entrapment Protection

Entrapment protection MUST be installed according to the following UL 325 requirements:

- Slide gate operators require a **minimum of two** external monitored entrapment protection devices to function; one in the open direction and one in the close direction.
- Every installation is unique. It is the responsibility of the installer to ensure that ALL entrapment zones are protected with an external monitored entrapment protection device, protecting both the open and close gate cycles.
- **LiftMaster monitored external entrapment protection devices MUST be used with LiftMaster operators to meet UL325 requirements, see *Accessories*.**
- Test ALL entrapment protection devices after completing installation of the operator. For testing instructions, refer to the manual provided with your entrapment protection device.

Definitions

ENTRAPMENT: The condition when a person is caught or held in a position that increases the risk of injury.

SLIDE GATE ENTRAPMENT ZONE: An entrapment zone exists if at any point during travel, the gap between the gate and any opposing fixed edge or surface such as posts, walls, pillars, columns or operator itself, is less than 16" (406 mm) in a location up to 6 ft. (1.8 m) above grade.

Illustrations provided by DASMA Gate Systems Safety Guide

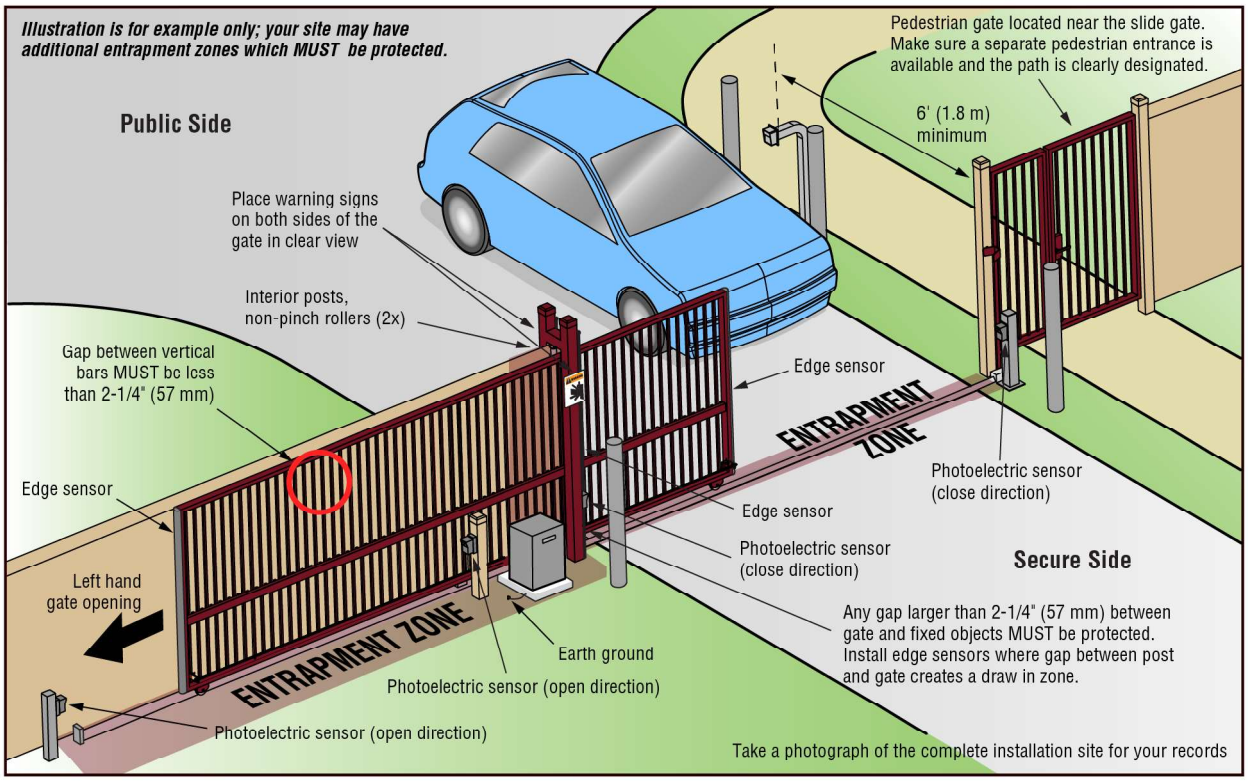

Wire Entrapment Protection Devices

There are three options for wiring the entrapment protection devices depending on the specific device and how the device will function. Refer to the specific entrapment protection device manual for more information. These entrapment protection device inputs are for monitored devices, which include pulsed photoelectric sensors, resistive edge sensors, and pulsed edge sensors. **Only one monitored entrapment protection device may be wired to each input.** Additional entrapment protection devices may be wired to the expansion board.

Control Board

CLOSES EYES/INTERRUPT

(2 Terminals) The CLOSE EYES/INTERRUPT input is for photoelectric sensor entrapment protection for the close direction. When an obstruction is sensed during gate closing the gate will open to the full open position and resets the Timer-to-Close. This input will be disregarded during gate opening.

CLOSE EDGE

(2 Terminals) The CLOSE EDGE input is for edge sensor entrapment protection for the close direction. When an obstruction is sensed during gate closing the gate will reverse to the full open position, disengaging the Timer-to-Close. This input will be disregarded during gate opening.

OPEN EYES/EDGE

(2 Terminals) The OPEN EYES/EDGE input is for photoelectric sensor or edge sensor entrapment protection for the open direction. When an obstruction is sensed during gate opening the gate will reverse for 4 seconds then stop. This input will be disregarded during gate closing.

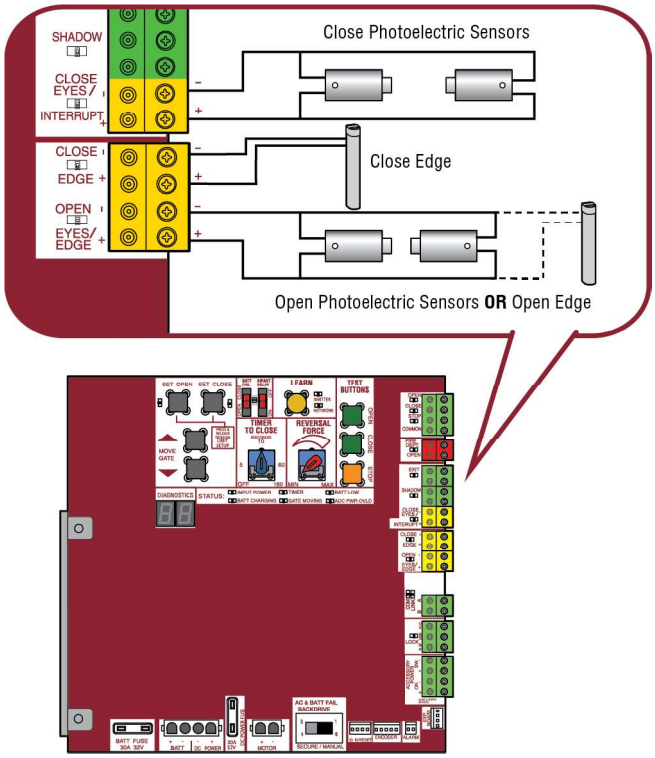

Expansion Board

EYE ONLY and COM

Open or Close Direction Photoelectric Sensors, the functionality is based on the switch settings (located next to the terminals)

Switch set to CLOSE: gate reverses fully when an obstruction is sensed

Switch set to OPEN: gate reverses 4 seconds when an obstruction is sensed

EYE/EDGE and COM

Open or Close Direction Photoelectric Sensors or Edge Sensor, the functionality is based on the switch settings (located next to the terminals)

Switch set to CLOSE: gate reverses fully when an obstruction is sensed

Switch set to OPEN: gate reverses 4 seconds when an obstruction is sensed

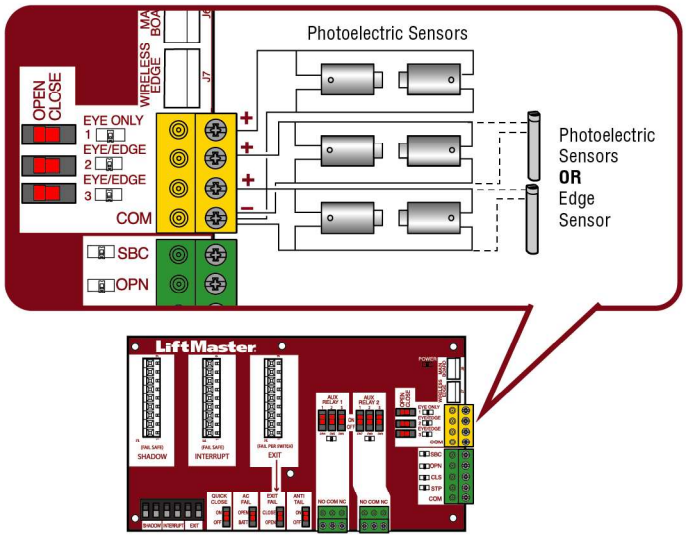

Step 5 Earth Ground Rod

Use the proper earth ground rod for your local area. The ground wire must be a single, whole piece of wire. Never splice two wires for the ground wire. If you should cut the ground wire too short, break it, or destroy its integrity, replace it with a single wire length.

1. Install the earth ground rod within 3 feet (.9 m) of the operator.
2. Run wire from the earth ground rod to the operator.

NOTE: *If the operator is not grounded properly the range of the remote controls will be reduced and the operator will be more susceptible to lightning and surge damage.*

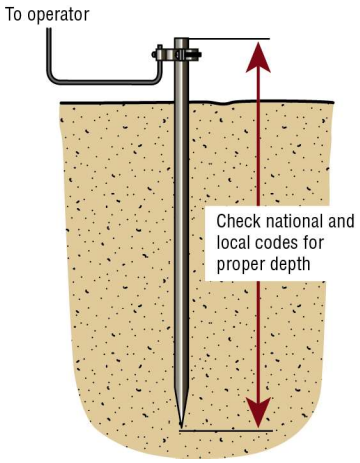

Step 6 Power Wiring

⚠ ⚠ WARNING

To reduce the risk of SEVERE INJURY or DEATH:

- ANY maintenance to the operator or in the area near the operator MUST NOT be performed until disconnecting the electrical power (AC or solar and battery) and locking-out the power via the operator power switch. Upon completion of maintenance the area MUST be cleared and secured, at that time the unit may be returned to service.
- Disconnect power at the fuse box BEFORE proceeding. Operator MUST be properly grounded and connected in accordance with national and local electrical codes. ***NOTE:*** *The operator should be on a separate fused line of adequate capacity.*
- ALL electrical connections MUST be made by a qualified individual.
- DO NOT install ANY wiring or attempt to run the operator without consulting the wiring diagram.
- ALL power wiring should be on a dedicated circuit and well protected. The location of the power disconnect should be visible and clearly labeled.
- ALL power and control wiring MUST be run in separate conduit.

The operator can be wired for either 120 Vac or 240 Vac or a solar panel (not provided). Follow the directions according to your application. An optional Transformer Kit (Model 3PHCONV) can be used to change the input voltage (208/240/480/575 Vac) to an output voltage of 120 Vac (refer to Accessories). For dual gate applications, power will have to be connected to each operator. Main power supply and control wiring MUST be run in separate conduits.

SOLAR APPLICATIONS: For solar applications refer to *Solar Panels* section in the Appendix. Follow the directions according to your application.

NOTE: *If using an external receiver use shielded wire for the connections and mount the receiver away from the operator to avoid interference from the operator.*

MAXIMUM WIRE LENGTH							
AMERICAN WIRE GAUGE (AWG)	STANDARD OPERATOR			OPERATOR + ACCESSORIES POWERED BY TRANSFORMER KIT			
	120 VAC, 10A (includes fully loaded outlets)	120 VAC, 4A	240 VAC, 2A	208 VAC, 4.8A	240 VAC, 4.2A	480 VAC, 2.1A	575 VAC, 1.7A
14	100 (30.5 m)	250 (76.2 m)	1,000 (304.8 m)	360 (109.7 m)	480 (146.3 m)	1,900 (579.1 m)	2,800 (853.4 m)
12	160 (48.8 m)	400 (121.9 m)	1,600 (487.7 m)	570 (173.7 m)	750 (228.6 m)	3,000 (914.4 m)	4,500 (1,371.6 m)
10	250 (76.2 m)	630 (192 m)	2,500 (762 m)	900 (274.3 m)	1,200 (365.8 m)	4,800 (1,463 m)	7,100 (2,164.1 m)
8	400 (121.9 m)	1,000 (304.8 m)	4,000 (1,219.2 m)	1,400 (426.7 m)	1,900 (579.1 m)	7,600 (2,316.5 m)	11,300 (3,444.2 m)
6	636 (193.9 m)	1,600 (487.7 m)	6,400 (1950.7 m)	2,300 (701 m)	3,000 (914.4 m)	12,100 (3,688.1 m)	18,000 (5,486.4 m)
4	1,000 (304.8 m)	2,500 (762 m)	10,100 (3,078.5 m)	3,700 (1,127.8 m)	4,800 (1,463 m)	19,300 (5,882.6 m)	28,500 (8,686.8 m)
Chart assumes: copper wire, 65°C, 5% drop							

All control wiring used to connect external devices to Class 2 circuits of the operator must be (QPTZ) Power-Limited Circuit Cables, Type CL2, CL2P, CL2R, or CL2X or other cable with equivalent or better electrical, mechanical, and flammability ratings.

240 VAC only

The accessory outlet is disabled and cannot be used with the 240 Vac option.

1. Remove the outlet housing from the electrical box by removing the screws (2).
2. Pull the outlet housing out and locate the power wiring connector on the EMI board.
3. Unplug the power wiring connector from the 120 Vac socket (factory default location) and plug it into the 240 Vac socket.
4. Replace the outlet housing by securing with the screws. The operator is now set for 240 Vac operation.

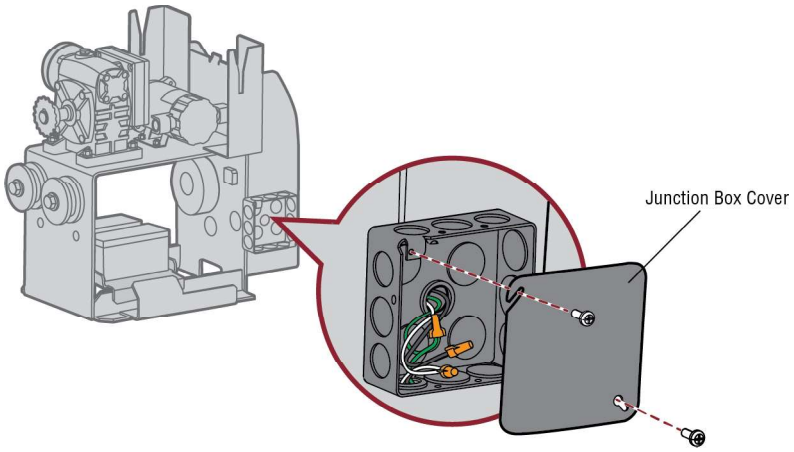

120 VAC and 240 VAC

1. Turn off the AC power from the main power source circuit breaker.
2. Run the AC power wires to the operator.
3. Remove the junction box cover.
4. Connect the green wire to the earth ground rod and AC ground using a wire nut. ***NOTE:*** *The earth ground rod can be grounded to the chassis.*
5. Connect the white wire to NEUTRAL using a wire nut.
6. Connect the black wire to HOT using a wire nut.
7. Replace the junction box cover. Ensure the wires are not pinched.

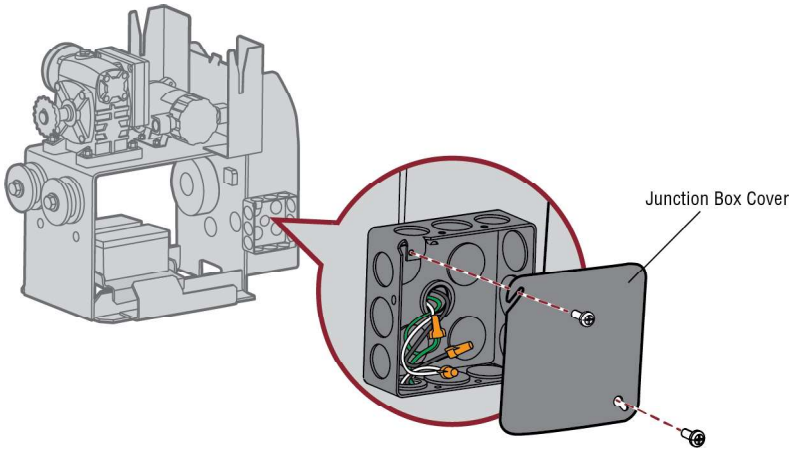

AC power switch

The AC Power switch on the operator will turn the incoming 120/240 Vac power ON or OFF. The operator's AC Power switch ONLY turns off AC power to the control board and DOES NOT turn off battery power.

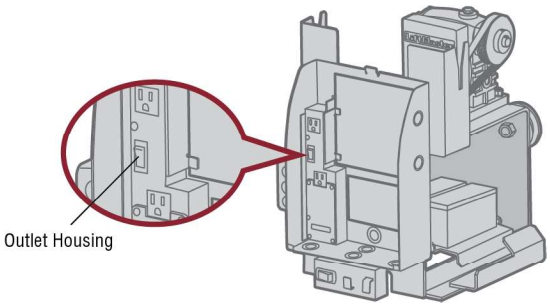

Step 7 Connect Batteries

7AH battery

The batteries are charged in the circuit by the integrated transformer. The batteries are for battery backup.

1. Turn OFF AC power to the operator.
2. Unplug the J15 plug labeled BATT on the control board by squeezing the plug and pulling it from the control board. This disconnects the ac/dc power to the control board.
3. Connect a jumper between the positive (+) terminal of one battery to the negative terminal (-) of the other battery.
4. Connect the red wire from the J15 plug to the positive (+) terminal of the battery.
5. Connect the black wire from the J15 plug to the negative (-) terminal of the battery.
6. Plug the J15 plug back into the control board. This will power up the control board. ***NOTE:*** *You may see a small spark when plugging the J15 plug into the board.*
7. Turn ON AC power to the operator.
8. Turn ON the AC power switch on the operator.

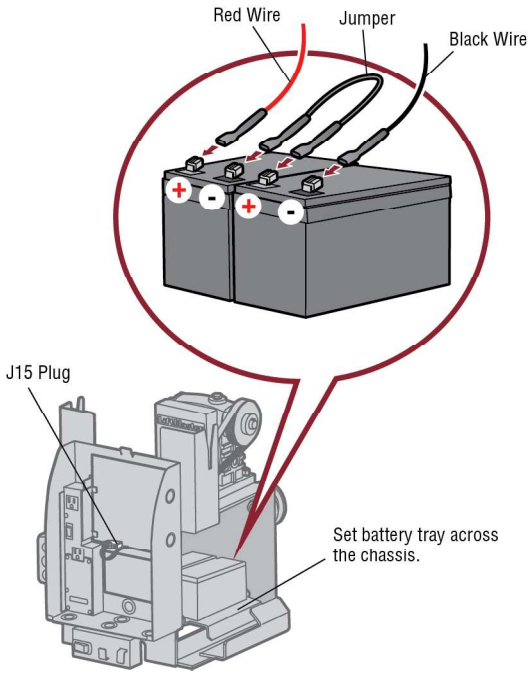

33AH battery

The batteries are charged in the circuit by the integrated transformer. The batteries are for battery backup or solar installation. The 33AH application requires the Solar Harness Kit (Model K94-37236) and an additional battery tray (Model K10-34758-2).

1. Locate the J15 plug on the control board and disconnect it.
2. Connect the white jumper from the Solar Harness Kit between the positive (+) terminal of one battery and the negative (-) terminal of the other battery.
3. Connect one end of the red (+) wire from the Solar Harness Kit to the red wire from the J15 plug as shown. Connect the other end of the red (+) wire to the positive (+) terminal on the battery as shown.
4. Connect one end of the black (-) wire from the Solar Harness Kit to the black wire from the J15 plug as shown. Connect the other end of the black (-) wire to the negative (-) terminal on the battery as shown.
5. Turn ON AC power to the operator.
6. Turn ON the AC power switch on the operator.
7. Reconnect the J15 plug to the control board. ***NOTE:*** *You may see a small spark when plugging the J15 plug into the board.*

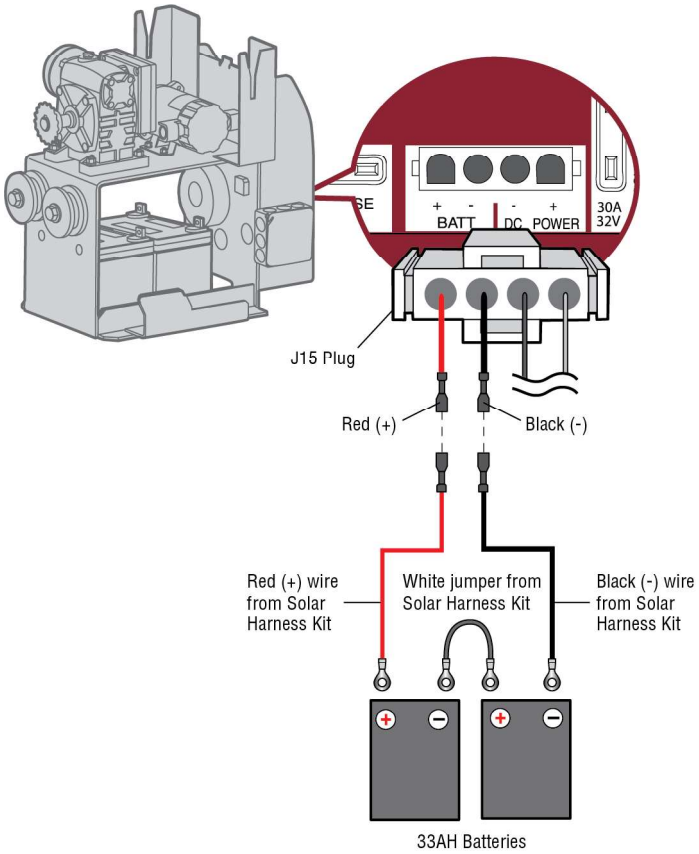

Step 8 Dual gate setup

There are two options for dual gate communication: wired or wireless. Follow the directions according to your application. Do not use wired and wireless communication simultaneously. Wired dual gate applications will have a longer battery standby time than wireless applications.

Wireless setup

To activate the wireless feature:

1. Choose an operator to be the network primary operator. All wireless accessories will need to be programmed to the primary operator. ***NOTE:*** *We recommend that all accessories and board configurations are set on the primary operator.*
2. Press and release the LEARN button on the primary operator. The green XMITTER LED will light. ***NOTE:*** *The operator will time out of programming mode after 180 seconds.*
3. Press and release the LEARN button again on the primary operator. The yellow NETWORK LED will light.
4. Press and release the OPEN test button to assign this operator as network primary.
5. Press and release the LEARN button on the second operator. The green XMITTER LED will light.
6. Press and release the LEARN button again on the second operator. The yellow NETWORK LED will light.
7. Press and release the CLOSE test button to assign this operator as network second.

Both operators will beep and the yellow NETWORK LEDs will turn off indicating programming is successful.

To deactivate the wireless feature:

1. Press and release the LEARN button on either operator. The green XMITTER LED will light.
2. Press and release the LEARN button again on the same operator. The yellow NETWORK LED will light.
3. Press and hold the LEARN button for 5 seconds. The yellow NETWORK LED will blink (operator will beep) then turn off indicating successful deactivation.
4. Repeat the steps for the other operator.

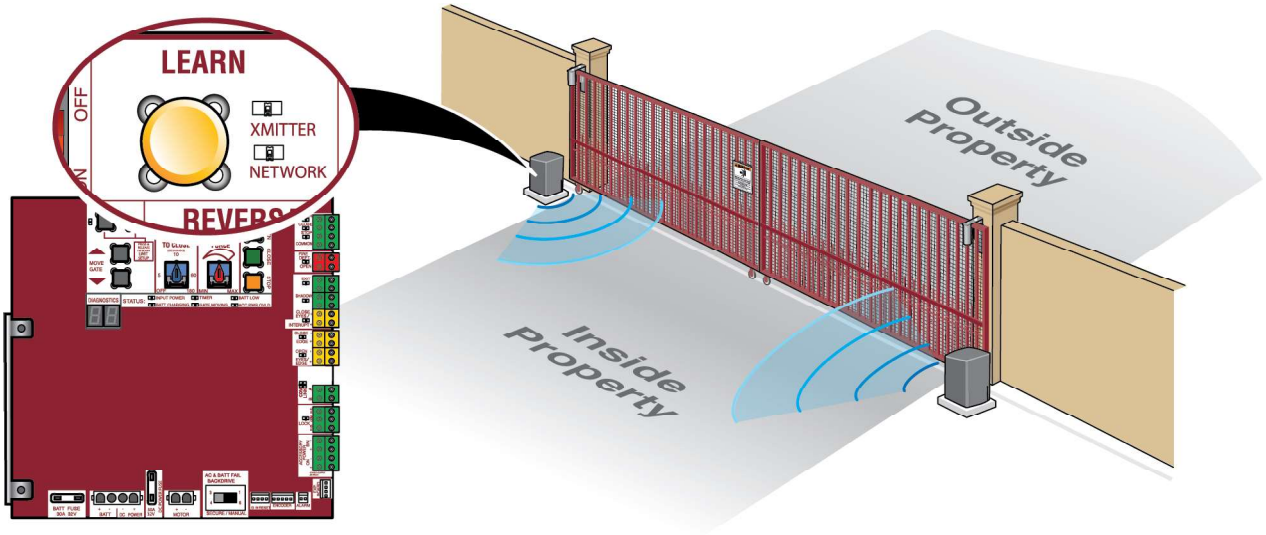

Wired setup

Before digging, contact local underground utility locating companies. Use PVC conduit to prevent damage to cables.

1. **Disconnect ALL power to the operator and unplug the J15 plug from the control board.**
2. Trench across driveway to bury the shielded twisted pair cable.
3. Connect the wires from the shielded twisted pair cable to the Com Link terminals on the primary gate operator control board. ***NOTE:*** *We recommend that all accessories and board configurations are set on the primary operator.*
4. Route the shielded twisted pair cable to the secondary gate operator's control board.
5. Connect the wires from the shielded twisted pair cable to the Com Link terminals on the secondary control board (Com Link A to Com Link A and Com Link B to Com Link B). Ground the shield of the cable to the chassis ground of one operator.
6. **Connect ALL power to the operator and plug the J15 plug into the control board.**

DUAL GATE WIRE TYPE (SHIELDED TWISTED PAIR CABLE)	
22AWG up to 200 feet (61 m)	18AWG - 200-1000 feet (61-305 m)
Wire must be rated at 30 Volt minimum	

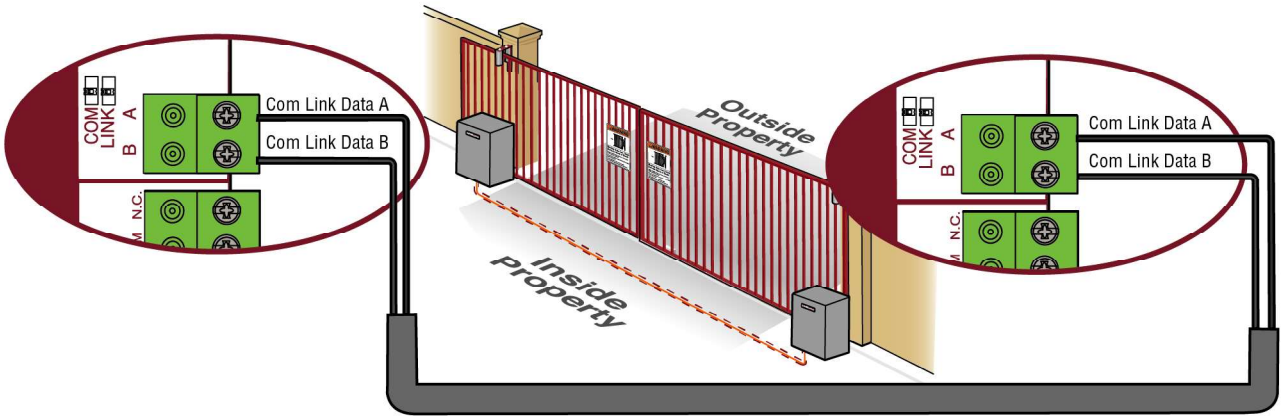

Bipart delay/synchronized close

The LOCK/BIPART DELAY switch is used only with dual gate applications and serves two functions:

- **BIPART DELAY**
  SWING GATE APPLICATIONS: The BIPART DELAY is used in applications where a mag-lock, solenoid lock, or decorative overlay would require one gate to close before the other. The operator with the LOCK/BIPART DELAY switch ON will delay from the close limit when opening and be the first to close from the open limit.
  SLIDE GATE APPLICATIONS: Not applicable, set to OFF.
- **SYNCHRONIZED CLOSE**
  The BIPART DELAY is also used in applications where one gate travels a longer distance than the other. To synchronize the closing of the gates, set the LOCK/BIPART DELAY switch to ON for both operators.

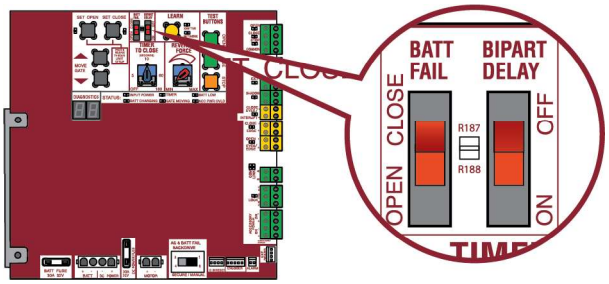

Step 9 Install the cover

Before installing the cover, follow the instructions in the Adjustment section to adjust the limits and force.

The operator cover consists of two pieces: a rear cover and a front cover. The front cover can easily be removed to access the electrical box. To access the reset switch slide the access door up. The front cover and access door can be locked with the key.

1. Align the tabs on the rear cover with the slots on the chassis and place the cover over the operator.
2. Secure both sides of the rear cover to the chassis with two 5/16-18 lead in screws.
3. Align the front cover with the back cover, making sure the grooves line up.
4. Secure the front cover to the chassis with two 5/16-18 lead in screws.
5. Secure the front cover to the rear cover using the 5/16-18 lead in screw.

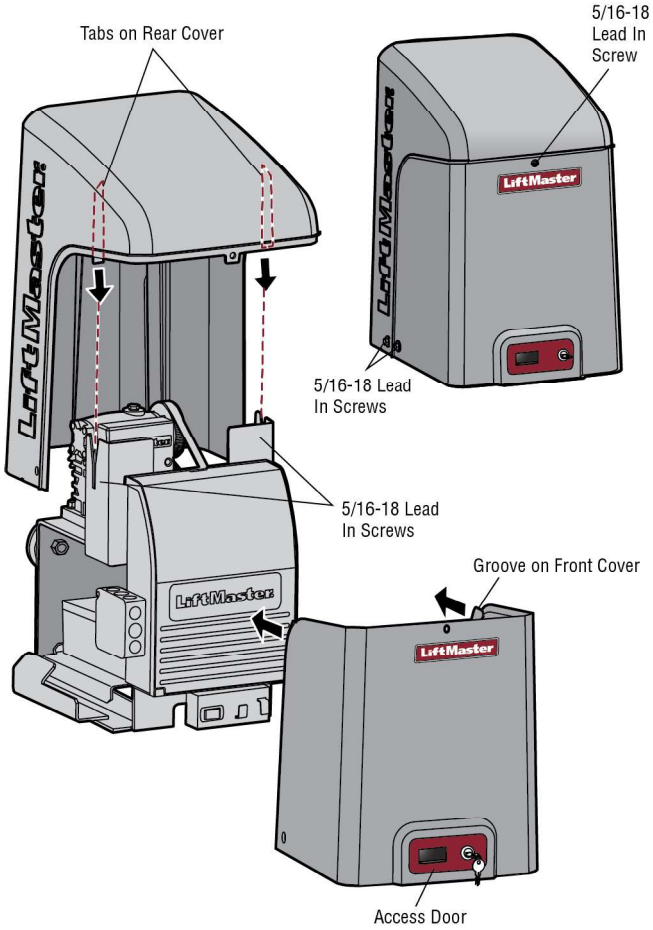

To Lock the Access Door

From the factory the access door for the reset switch will not be locked. To lock the access door follow the steps below:

1. Locate the lock tab on the back of the front cover and remove the screw securing the tab to the cover.
2. Turn the tab 180 degrees, then secure with the screw. The access door can now be locked.

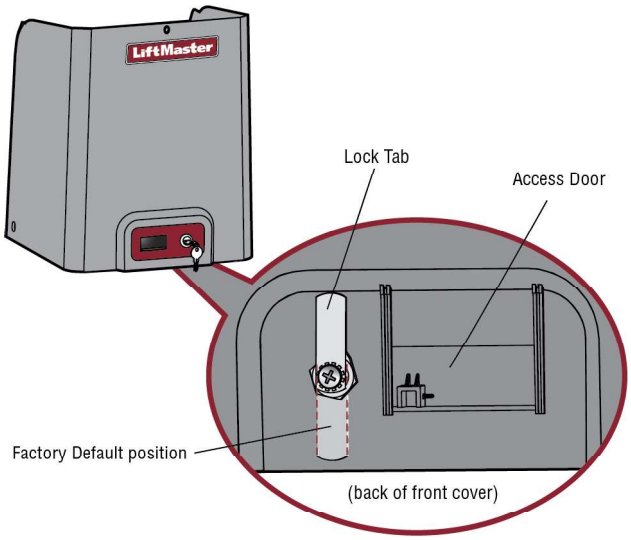

The basic installation is complete.

Limit and Force Adjustment

⚠ WARNING

To reduce the risk of SEVERE INJURY or DEATH:

- Without a properly installed safety reversal system, persons (particularly small children) could be SERIOUSLY INJURED or KILLED by a moving gate.
- Too much force on gate will interfere with proper operation of safety reversal system.
- NEVER increase force beyond minimum amount required to move gate.
- NEVER use force adjustments to compensate for a binding or sticking gate.
- If one control (force or travel limits) is adjusted, the other control may also need adjustment.
- After ANY adjustments are made, the safety reversal system MUST be tested. Gate MUST reverse on contact with an object.

Introduction

Your operator is designed with electronic controls to make travel limit and force adjustments easy. The adjustments allow you to program where the gate will stop in the open and close position. The electronic controls sense the amount of force required to open and close the gate. The force is adjusted automatically when you program the limits but should be fine tuned using the REVERSAL FORCE dial on the control board (refer to *Fine Tune the Force* section) to compensate for environmental changes. The limit setup LEDs (located next to the SET OPEN and SET CLOSE buttons) indicate the status of the limits, refer to the table to the right.

The limits can be set using the control board (below) or a remote control (refer to *Limit Setup with a Remote Control* in the Appendix). Setting the limits with a remote control requires a 3-button remote control programmed to OPEN, CLOSE, and STOP.

NOTE: *The TEST buttons on the control board will not work until the limits have been set and the required entrapment protection devices are installed.*

LIMIT SETUP LEDS			
SET OPEN LED	**SET CLOSE LED**	**OPERATOR MODE**	**EXPLANATION**
OFF	OFF	NORMAL MODE	Limits are set
BLINKING	BLINKING	LIMIT SETTING MODE	Limits are not set
BLINKING	ON	LIMIT SETTING MODE	Open limit is not set
ON	BLINKING	LIMIT SETTING MODE	Close limit is not set
ON	ON	LIMIT SETTING MODE	Limits are set

Initial Limits and Force Adjustment

For dual gate applications the limits will have to be set for each operator. The gate MUST be attached to the operator before setting the limits and force.

For slide gate applications the open limit and closed limit MUST be set at least four feet apart.

1. Press and release the SET OPEN and SET CLOSE buttons simultaneously to enter limit setting mode.
2. Press and hold one of the MOVE GATE buttons to move the gate to the open or close limit.
3. Press and release the SET CLOSE or SET OPEN button depending on which limit is being set.
4. Press and hold one of the MOVE GATE button to move the gate to the other limit.
5. Press and release the SET CLOSE or SET OPEN button depending on which limit is being set.
6. Cycle the gate open and close. This automatically sets the force.

When limits are set properly the operator will automatically exit limit setting mode.

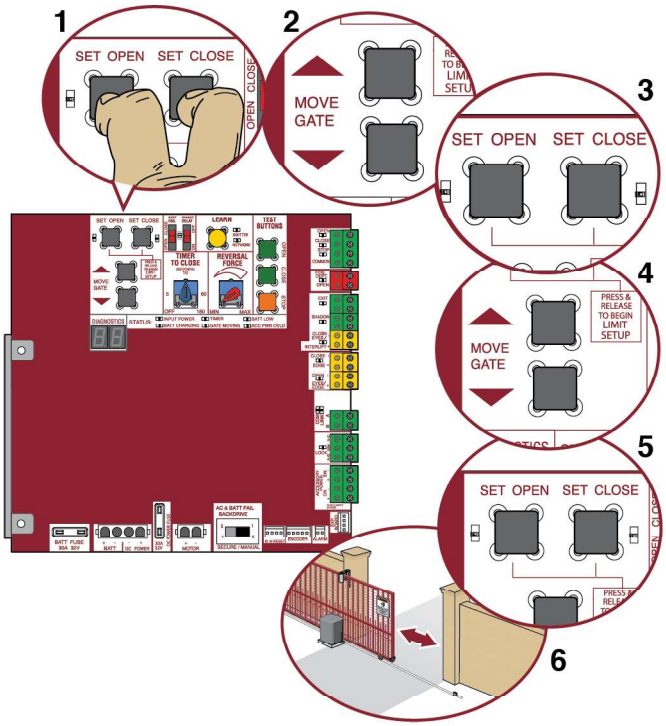

Fine Tune the Force

Once the initial limits have been set, the REVERSAL FORCE DIAL on the control board is used for fine tuning the force where wind or environmental changes may affect the gate travel. The REVERSAL FORCE DIAL is set to minimum at the factory.

Based on the length and weight of the gate it may be necessary to make additional force adjustments. The force setting should be high enough that the gate will not reverse by itself nor cause nuisance interruptions, but low enough to prevent serious injury to a person. The force setting is the same for both the open and close gate directions.

1. Open and close the gate with the TEST BUTTONS.
2. If the gate stops or reverses before reaching the fully open or closed position, increase the force by turning the force control slightly clockwise.
3. Perform the "Obstruction Test" after every limit and force setting adjustment (see below).

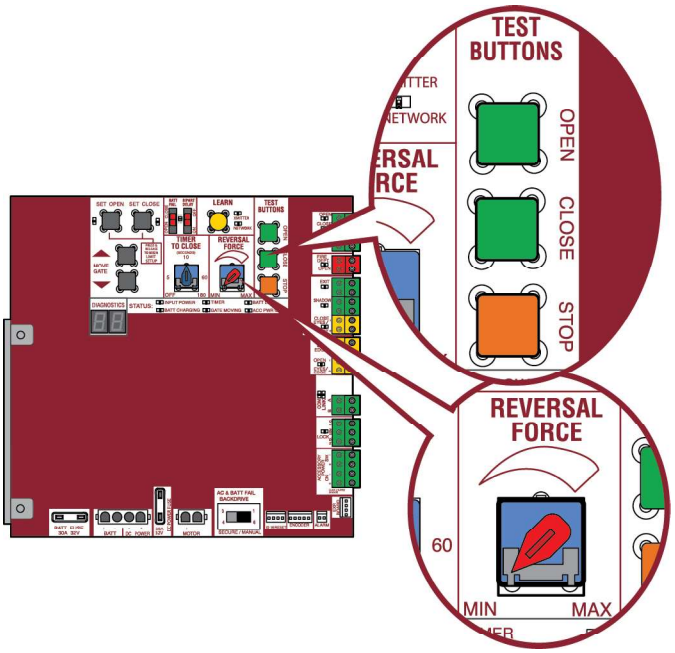

Adjust the Limits

After both limits are set and the operator is ready to run, one limit can be adjusted independently from the other by following steps 1-3 of the Initial Limit and Force Adjustment section.

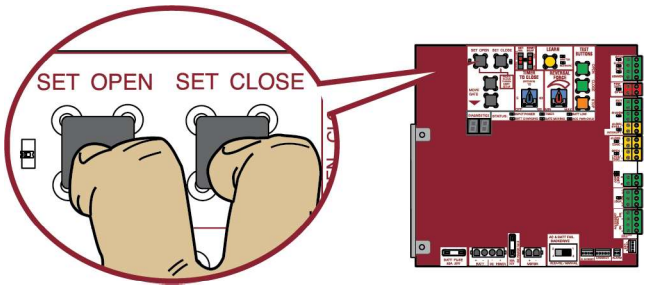

Obstruction Test

The operator is equipped with an inherent (built in to the operator) obstruction sensing device. If the gate encounters an obstruction during motion, the operator will reverse direction of the gate and then stop. The following procedure will test ONLY the inherent (built in to the operator) obstruction sensing device:

1. Open and close the gate with the TEST BUTTONS, ensuring that the gate is stopping at the proper open and close limit positions.
2. Place an object between the open gate and a rigid structure. Make sure that any external entrapment protection devices will NOT be activated by the object.
3. Run the gate in the close direction. The gate should stop and reverse upon contact with the object. If the gate does not reverse off the object, reduce the force setting by turning the force control slightly counter-clockwise. The gate should have enough force to reach both the open and close limits, but MUST reverse after contact with an object.
4. Repeat the test for the open direction.

Test the operator after any adjustments are made.

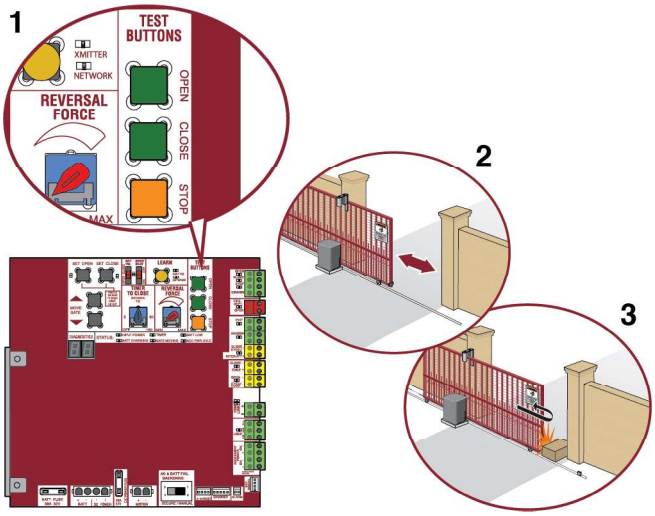

Remote Controls (Not Provided)

A total of 50 Security+ 2.0® remote controls or KPW250 keypads and 2 keyless entries (1 PIN for each keyless entry) can be programmed to the operator. When programming a third keyless entry to the operator, the first keyless entry will be erased to allow the third keyless entry to be programmed. When the operator's memory is full it will exit the programming mode and the remote control will not be programmed. The memory will need to be erased before programming any additional remote controls. ***NOTE:*** *If installing an 86LM to extend the range of the remote controls DO NOT straighten the antenna.*

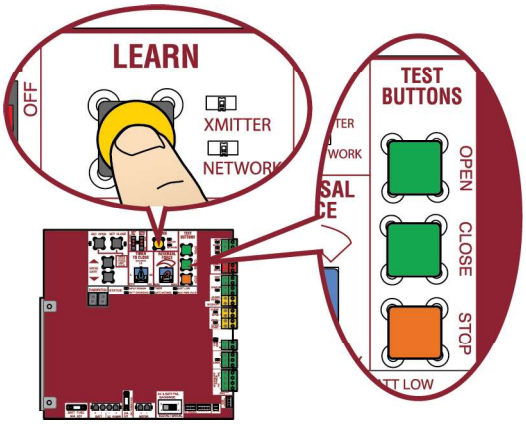

There are 3 different options for programming the remote control depending on how you would like the remote control to function. Choose a programming option:

OPTION	DESCRIPTION	PROGRAMMING STEPS
Single button as OPEN only	Program a single button on the remote control for open only. The Timer-to-Close can be set to close the gate.	1. Press and release the LEARN button (operator will beep and green XMITTER LED will light). ***NOTE:*** *The operator will time out of programming mode after 30 seconds.* 2. Press the OPEN button. 3. Press the remote control button that you would like to program.
Single button (SBC) as OPEN, CLOSE, and STOP	Program one remote control button as an open, close, and stop.	1. Press and release the LEARN button (operator will beep and green XMITTER LED will light). ***NOTE:*** *The operator will time out of programming mode after 30 seconds.* 2. Press the remote control button that you would like to program.
Three separate buttons as OPEN, CLOSE, and STOP	Program each remote control button as an open, close, and stop.	1. Press and release the LEARN button (operator will beep and green XMITTER LED will light). ***NOTE:*** *The operator will time out of programming mode after 30 seconds.* 2. Press the OPEN, CLOSE, or STOP button, depending on the desired function. 3. Press the remote control button that you would like to program.

The operator will automatically exit learn mode (operator will beep and green XMITTER LED will go out) if programming is successful. To program additional Security+ 2.0® remote controls or remote control buttons, repeat the programming steps above.

Entering programming mode using external reset button or 3-button control station:

1. Make sure gate/door is closed.
2. Give the operator an OPEN command.
3. Within 30 seconds, when the gate/door is at the open limit press and release the RESET/STOP button twice to put the operator into programming mode. ***NOTE:*** *The operator will time out of programming mode after 30 seconds.*

NOTICE: This device complies with Part 15 of the FCC rules and Industry Canada's license-exempt RSSs. Operation is subject to the following two conditions: (1) this device may not cause harmful interference, and (2) this device must accept any interference received, including interference that may cause undesired operation.
Any changes or modifications not expressly approved by the party responsible for compliance could void the user's authority to operate the equipment.
This device must be installed to ensure a minimum 20 cm (8 in.) distance is maintained between users/bystanders and device.
This device has been tested and found to comply with the limits for a Class B digital device, pursuant to part 15 of the FCC rules and Industry Canada ICES standard. These limits are designed to provide reasonable protection against harmful interference in a residential installation. This equipment generates, uses and can radiate radio frequency energy and, if not installed and used in accordance with the instructions, may cause harmful interference to radio communications. However, there is no guarantee that interference will not occur in a particular installation. If this equipment does cause harmful interference to radio or television reception, which can be determined by turning the equipment off and on, the user is encouraged to try to correct the interference by one or more of the following measures:
- Reorient or relocate the receiving antenna.
- Increase the separation between the equipment and receiver.
- Connect the equipment into an outlet on a circuit different from that to which the receiver is connected.
- Consult the dealer or an experienced radio/TV technician for help.

LiftMaster Internet Gateway (not provided)

To program the operator to the LiftMaster Internet Gateway:

Using the learn button on the opertaor's control board

1. Connect the ethernet cable to the LiftMaster Internet Gateway and the router.
2. Connect power to the LiftMaster Internet Gateway.
3. Create an online account by visiting www.myliftmaster.com.
4. Register the LiftMaster Internet Gateway.
5. Use an internet enabled computer or smartphone to add devices. The LiftMaster Internet Gateway will stay in learn mode for three minutes.
6. Press the Learn button twice on the primary operator (the operator will beep as it enters learn mode). The LiftMaster Internet Gateway will pair to the operator if it is within range and the operator will beep if programming is successful.

Using the reset button on the operator

1. Connect the ethernet cable to the LiftMaster Internet Gateway and the router.
2. Connect power to the LiftMaster Internet Gateway.
3. Create an online account by visiting www.myliftmaster.com.
4. Register the LiftMaster Internet Gateway.
5. Use an internet enabled computer or smartphone to add devices. The LiftMaster Internet Gateway will stay in learn mode for three minutes.
6. Ensure gate is closed.
7. Give the operator an OPEN command.
8. Within 30 seconds, when the gate is at the open limit press and release the reset button 3 times (on primary gate) to put primary operator into High Band Learn Mode (the operator will beep as it enters learn mode). The LiftMaster Internet Gateway will pair to the operator if it is within range and the operator will beep if programming is successful.

The status as shown by the LiftMaster Internet Gateway app will be either “open” or “closed”. The gate operator can then be controlled through the LiftMaster Internet Gateway app.

Erase All Codes

1. Press and release the LEARN button (operator will beep and green XMITTER LED will light).
2. Press and hold the LEARN button again until the green XMITTER LED flashes and then release the button (approximately 6 seconds). All remote control codes are now erased.

Erase Limits

1. To erase the limits, press and hold the SET OPEN and SET CLOSE buttons simultaneously (5 seconds) until both the SET OPEN and SET CLOSE LEDs blink rapidly and the operator beeps.
2. Release the buttons and the SET OPEN and SET CLOSE LEDs will blink slowly indicating the limits will need to be set.

Constant Pressure Override (CPO)

Constant Pressure Override is for use with KPW5 and KPW250 keypads (not provided). The KPW5/KPW250 wireless commercial keypads are security keypads and can only be programmed to ONE gate operator (see the KPW5/KPW250 manual for complete programming instructions).

The Constant Pressure Override feature is intended to temporarily override a fault in the entrapment protection system, in order to operate the gate until the external entrapment protection device is realigned or repaired. Use the feature only in line of sight of the gate when no obstructions to travel are present. External entrapment protection devices include LiftMaster monitored photoelectric sensors and LiftMaster monitored wired and wireless edge sensors. Be sure to repair or replace these devices promptly if they are not working properly.

To use Constant Pressure Override:

1. Enter a valid 4-digit PIN.
2. Press and hold # for 5 seconds to enter CPO. Continue to hold # to keep the operator in motion. A continuous tone will sound until limit is met and/or # is released.
3. The operator will stop when either the operator reaches a limit or the user releases #.

Gate Hold Open Feature

The gate hold open feature will disable the timer and keep the gate at the open limit. The gate hold open feature can be activated through the Reset Button as described on Page 29 or through the KPW5 and KPW250 keypads (not provided).

To use the gate hold open feature:

1. Enter a valid 4-digit PIN when the gate is at the Open Limit and the timer is running
2. The Operator will chirp indicating the timer is canceled.

To restart the gate:

1. Re-enter the 4-digit PIN
2. Activate a Hard input or a programmed remote

To Remove and Erase Monitored Entrapment Protection Devices

1. Remove the entrapment protection device wires from the terminal block.
2. Press and release the SET OPEN and SET CLOSE buttons simultaneously. The SET OPEN and SET CLOSE LEDs will turn on (entering learn limit mode).
3. Press and release both SET OPEN and SET CLOSE buttons again to turn off the SET OPEN and SET CLOSE LEDs (exiting learn limit mode).

Gate operator setup examples

The following are example setups for the gate operator. Your specific site requirements may be different. Always setup the operator system to the site requirements, including all necessary entrapment protection devices.

RESIDENTIAL: One to four residential homes sharing a gated entrance/exit, allowing vehicle access trumps security concerns

COMMERCIAL/GENERAL ACCESS: A residential community (more than four homes) having one or more gated entrances/exits, allowing vehicle access trumps security concerns

COMMERCIAL: Business site where security (gate closed) is important

INDUSTRIAL: Large business site where security is required

SETTING	RESIDENTIAL	COMMERCIAL/GENERAL ACCESS	COMMERCIAL	INDUSTRIAL
Quick Close switch setting	Normally set to OFF. Normal gate close (timer or control).	Normally set to OFF. Normal gate close (timer or control).	Normally set to OFF. Normal gate close (timer or control).	Set to ON, so that gate closes immediately after vehicle passes CLOSE EYES/Interrupt loop.
AC Fail Open switch setting	Normally set to BATT. Run on battery if AC power fails.	Normally set to BATT. For local jurisdiction requirement, set to OPEN so that the gate will open approximately 15 seconds after AC power fail.	Normally set to BATT. Run on battery if AC power fails.	Normally set to BATT. Run on battery if AC power fails.
Low Battery switch setting	Normally set to OPEN. If powered from battery and battery is low, gate automatically opens and stays open.	Normally set to OPEN. If powered from battery and battery is low, gate automatically opens and stays open.	Normally set to CLOSE. If powered from battery and battery is low, gate stays closed.	Normally set to CLOSE. If powered from battery and battery is low, gate stays closed.
Anti-Tail switch setting	Normally set to OFF. CLOSE EYES/Interrupt loop reverses a closing gate.	Normally set to OFF. CLOSE EYES/Interrupt loop reverses a closing gate.	Set to ON. In attempt to prevent vehicle tail-gating, CLOSE EYES/ Interrupt loop pauses a closing gate.	Set to ON. In attempt to prevent vehicle tail-gating, CLOSE EYES/ Interrupt loop pauses a closing gate.
Bipart Delay switch setting	For DUAL-GATE site, set to ON for gate that delays upon opening.	For DUAL-GATE site, set to ON for gate that delays upon opening.	For DUAL-GATE site, set to ON for gate that delays upon opening.	For DUAL-GATE site, set to ON for gate that delays upon opening.
Aux Relay Out – Open Limit Switch	Typically not required.	Use with SAMS (Sequence Access Management System).	1. Use with SAMS (Sequence Access Management System). 2. Connect "Gate Open" indicator (e.g. light).	1. Use with SAMS (Sequence Access Management System). 2. Connect "Gate Open" indicator (e.g. light).
Aux Relay Out – Close Limit Switch	Typically not required.	Typically not required.	Connect "Gate Close/Secure" indicator (e.g. light).	Connect "Gate Close/Secure" indicator (e.g. light).
Aux Relay Out – Gate Motion	Attach alert signal (audible or visual alert system).	Attach alert signal (audible or visual alert system).	Attach alert signal (audible or visual alert system).	Attach alert signal (audible or visual alert system).
Aux Relay Out – Pre-Motion Delay	Attach alert signal (audible or visual alert system).	Attach alert signal (audible or visual alert system).	Attach alert signal (audible or visual alert system).	Attach alert signal (audible or visual alert system).
Aux Relay Out – Power	Attach visual alert to know when system is charging batteries (i.e. not running on batteries).	Attach visual alert to know when system is charging batteries (i.e. not running on batteries).	Attach visual alert to know when system is charging batteries (i.e. not running on batteries).	Attach visual alert to know when system is charging batteries (i.e. not running on batteries).
Aux Relay Out – Tamper (Slide Gates Only)	Attach alert signal (audible or visual alert system) to indicate if gate is manually tampered with by being pushed off of close limit.	Attach alert signal (audible or visual alert system) to indicate if gate is manually tampered with by being pushed off of close limit.	Attach alert signal (audible or visual alert system) to indicate if gate is manually tampered with by being pushed off of close limit.	Attach alert signal (audible or visual alert system) to indicate if gate is manually tampered with by being pushed off of close limit.
Cycle Quantity Feedback	Use during servicing only to determine operator cycles.	Use during servicing only to determine operator cycles.	Use during servicing only to determine operator cycles.	Use during servicing only to determine operator cycles.
Fire Dept Open Input	Typically not required.	Connect emergency access system (Knox box switch, SOS system, etc.).	Typically not required.	Typically not required.
Heater Accessory (Model HTR)	The heater keeps the gearbox and batteries at a suitable temperature when the outside temperature is below -4°F. The thermostat MUST be set between 45°F and 60°F to ensure proper gate operation.	The heater keeps the gearbox and batteries at a suitable temperature when the outside temperature is below -4°F. The thermostat MUST be set between 45°F and 60°F to ensure proper gate operation.	The heater keeps the gearbox and batteries at a suitable temperature when the outside temperature is below -4°F. The thermostat MUST be set between 45°F and 60°F to ensure proper gate operation.	The heater keeps the gearbox and batteries at a suitable temperature when the outside temperature is below -4°F. The thermostat MUST be set between 45°F and 60°F to ensure proper gate operation.

Control Board Overview

1 SET OPEN Button: The SET OPEN button sets the OPEN limit. See *Adjust Limits* section.

2 SET CLOSE Button: The SET CLOSE button sets the CLOSE limit. See *Adjust Limits* section.

3 MOVE GATE Buttons: The MOVE GATE buttons will either open or close the gate when the operator is in Limit setting mode. See Adjust Limits section.

4 BATT FAIL:

- When AC power is OFF and battery voltage is critically low the gate will latch at a limit until AC power is restored or batteries voltage increases.
- Option select switch set to OPEN forces gate to automatically open and then latch at the OPEN limit until AC power is restored or battery voltage increases.
- Option select switch set to CLOSE forces gate to latch at CLOSE limit if at CLOSE limit or on next CLOSE command until AC power restored or battery voltage increases.
- Constant pressure on a hard command input overrides to open or close the gate.
- Critically low battery is less than 23 V

5 BIPART DELAY Switch: The LOCK/BIPART DELAY switch is used only for dual gates. See Bipart Delay section.

6 LEARN Button: The LEARN button is for programming remote controls and the network.

7 TIMER-TO-CLOSE dial: The TIMER-TO-CLOSE (TTC) dial can be set to automatically close the gate after a specified time period. The TTC is factory set to OFF. If the TTC is set to the OFF position, then the gate will remain open until the operator receives another command from a control. Rotate the TIMER-TO-CLOSE dial to the desired setting. The range is 0 to 180 seconds, 0 seconds is OFF. ***NOTE:*** *Any radio command, single button control, or CLOSE command on the control board prior to the TTC expiring will close the gate. The TTC is reset by any signals from the open controls, loops, close edges, and close photoelectric sensors (IR's).*

8 REVERSAL FORCE dial: The REVERSAL FORCE dial fine tunes the force. See *Force Adjustment* section.

9 TEST BUTTONS: The TEST BUTTONS will operate the gate (OPEN, STOP and CLOSE).

10 STATUS LEDs: The STATUS LEDs indicate the status of the operator. See Status LED Chart in the Troubleshooting section.

11 DIAGNOSTICS Display: The diagnostics display will show the operator type, firmware version, and codes. The operator type will display as "SL" followed by a "24" which indicates the operator type as CSL24UL. The firmware version will show after the operator type, example "1.2".

12 BACKDRIVE Switch: Set to MANUAL will allow the gate to be manually pushed open or closed if there is a loss of AC and battery power. Set to SECURE makes the gate difficult to push open or closed if there is a loss of AC and battery power.

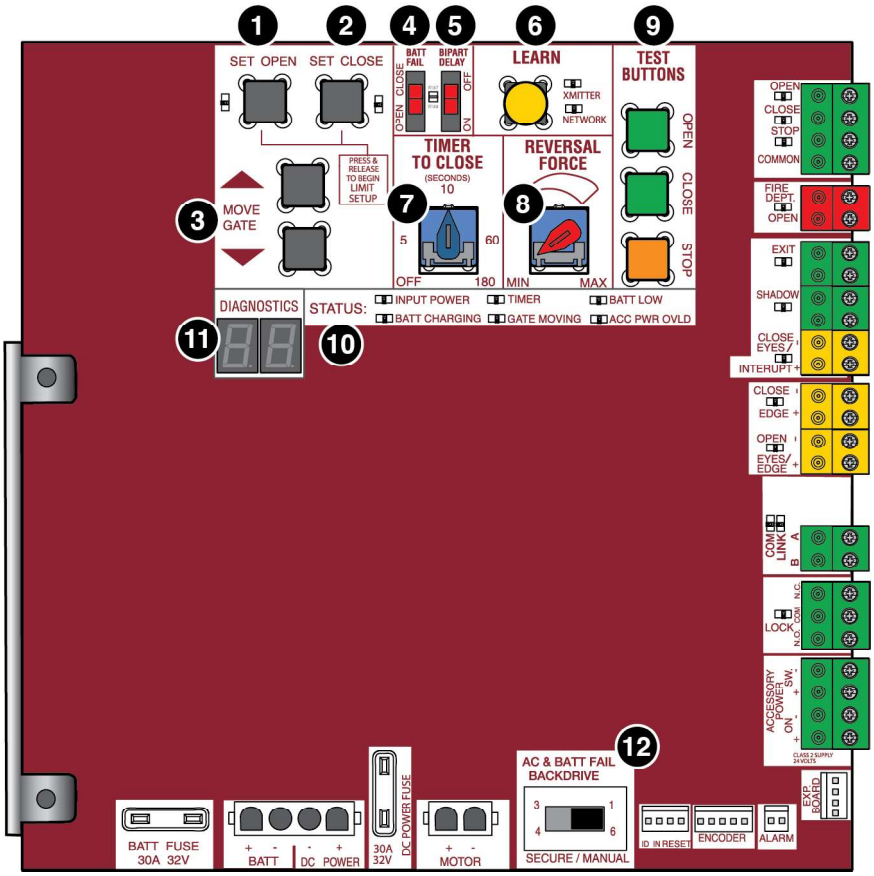

Manual Disconnect

Press the reset switch to RESET/DISCONNECT. Release the handle on the operator arm to allow the gate to be opened and closed manually. On a dual gate application the handle must be released on both operators. To resume normal function tighten the handle by pushing it down.

Reset Switch

The reset switch is located on the front of the operator and serves several functions.

Toggling the reset switch will stop a moving gate during a normal open/close cycle, like a stop button. The operator does not need to be reset after doing this. The reset switch will disable the gate in the present position and will energize the solenoid lock for two minutes and disable the maglock for two minutes.

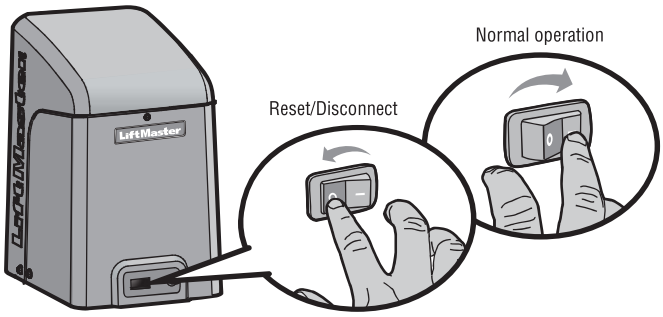

Operator Alarm

If a contact sensor detects an obstruction twice consecutively the alarm will sound (up to 5 minutes) and the operator will need to be reset.

When the inherent force of the operator (RPM/current sensor) detects the following (twice consecutively) the alarm will sound (up to 5 minutes) and the operator will need to be reset.

A. The gate is hitting a wall or vehicle.
B. The gate does not meet specifications.
C. Debris is on the gate's track such as mud, rocks, dirt, etc.
D. The gate has one or more broken axles or wheels.
E. The gate wheel is off the gate rail.

Remove any obstructions. Press the reset button to shut off the alarm and reset the operator. After the operator is reset, normal functions will resume.

The operator alarm will beep 3 times with a command if the battery is low.

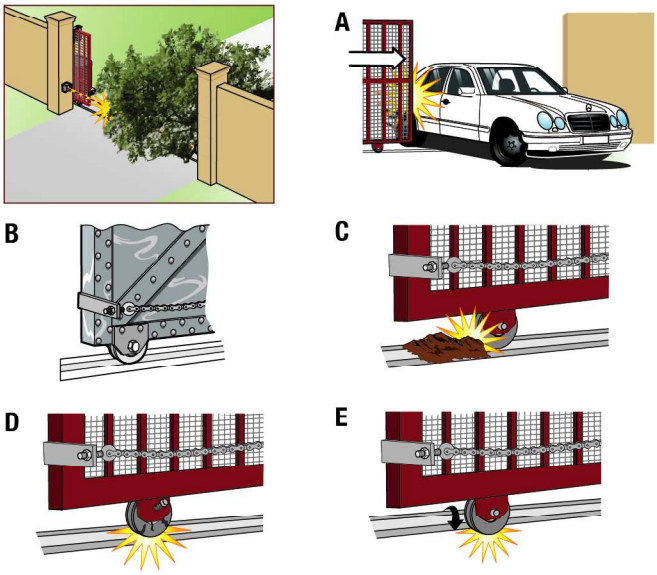

Remote control

Single Button Control (SBC) Functionality

Once the remote control has been programmed the operator will operate as follows:

When gate is in the closed position, activation of the remote control button will open the gate. During the open cycle another activation of the remote control will stop the gate and the next activation of the remote control will close the gate.

When the gate is in the open position, activation of the remote control button will close the gate. If the remote control is activated while the gate is closing, the gate will stop and the next activation will open the gate.

ACCESSORY WIRING

All control wiring used to connect external devices to Class 2 circuits of the operator must be (QPTZ) Power-Limited Circuit Cables, Type CL2, CL2P, CL2R, or CL2X or other cable with equivalent or better electrical, mechanical, and flammability ratings.

External control devices

EXIT (2 Terminals)

This input is a soft open command (maintained switch does not override external safeties and does not reset alarm condition). Used for exit probe, telephone entry, external exit loop detector, or any device that would command the gate to open.

- Opens a closing gate and holds open an open gate, if maintained, pauses Timer-to-Close at OPEN limit.

SHADOW (2 Terminals)

This input is used for external shadow loop detector when loop is positioned under the swing of the gate.

- Holds open gate at open limit
- Only active when the gate is at the OPEN limit, disregarded at all other times
- Pauses Timer-to-Close at OPEN limit

INTERRUPT (2 Terminals)

This input is used for photoelectric sensors and external interrupt loop detector when loop is on the outside of the gate.

- Holds open gate at open limit
- Stops and reverses a closing gate to open limit
- Pauses Timer-to-Close at OPEN limit, activates quick close and anti-tailgate features when enabled on the expansion board

Access control device wiring

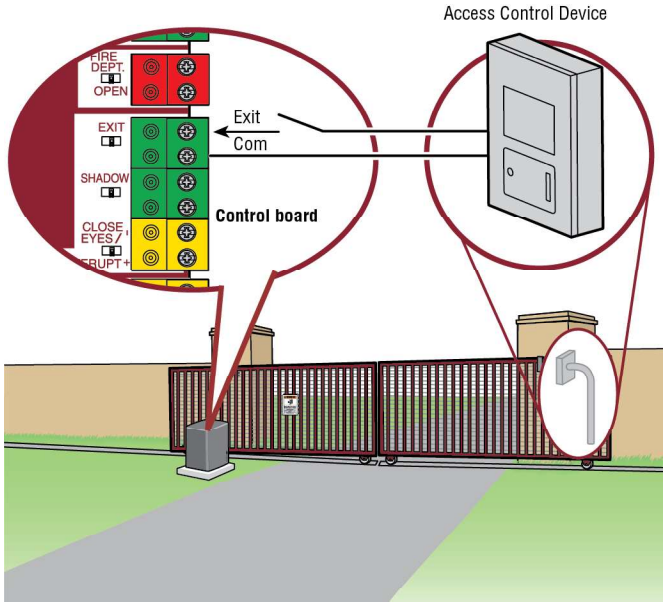

Loop wiring

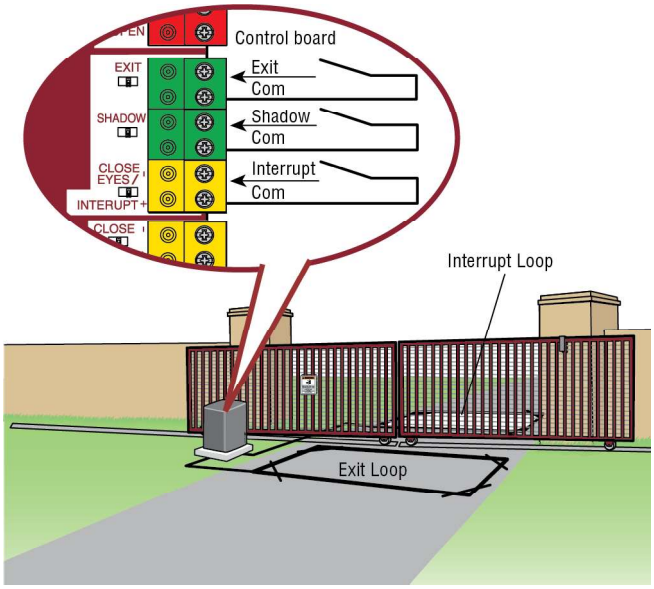

Locks

Maglock (2 Terminals, N.C. and COM)

Relay contact output, Normally - closed (N.C.) output for maglocks.

Relay activates prior to motor activation and during motor run. Relay is off when motor is off.

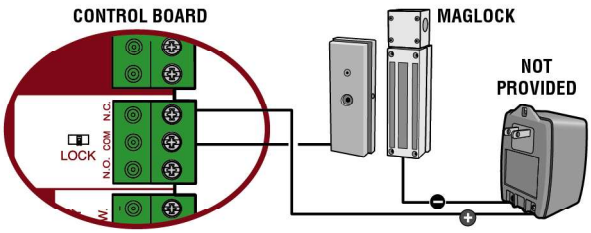

Miscellaneous wiring

Three button control station (4 Terminals)

- OPEN and COM: Opens a closed gate. Hard open (maintained switch overrides external safeties and resets alarm condition). If maintained, pauses Timer-to-Close at OPEN limit. Opens a closing gate and holds open an open gate (within line-of-sight).
- CLOSE and COM: Closes an open gate. Hard close (maintained switch overrides external safeties and resets alarm condition within line-of-sight)
- STOP and COM: Stops a moving gate. Hard stop (maintained switch overrides Open and Close commands and resets alarm condition). If maintained, pauses Timer-to-Close at OPEN limit. Overrides Open and Close commands (within line-of-sight).

Fire department open input (2 Terminals)

Acts as hard open.

Maintained input overrides (ignores) external safeties (photoelectric sensor and edge), pauses Timer-to-Close momentary input logic as single button control and safeties remain active, re-enables Timer-to-Close.

Accessory power 24 VDC, MAX 500 mA (4 Terminals)

- SWITCHED: Switched ON with gate motion and at the open limit when Timer-to-Close is active. Turns off 5 seconds after motion.
- UNSWITCHED: 24 Vdc voltage out to power accessories, always ON.

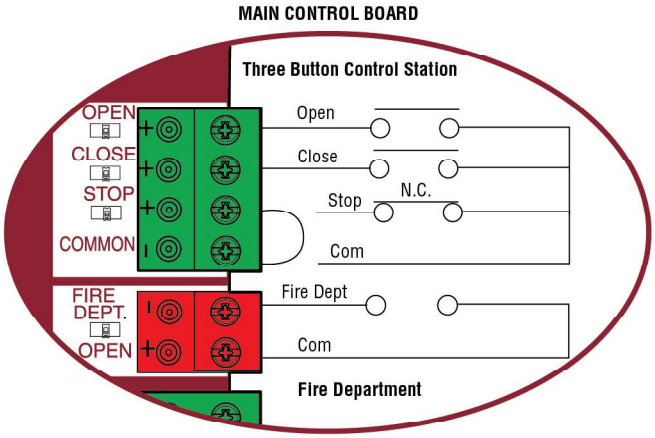

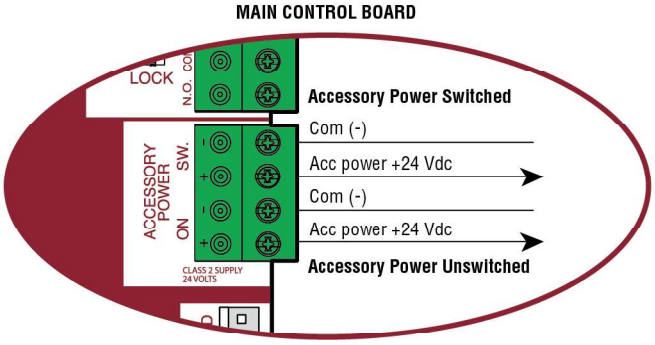

⚠ CAUTION

- To AVOID damaging the circuit board, relays or accessories, DO NOT connect more than 42 Vdc (32 Vac) to the AUX relay contact terminal blocks.

Expansion board overview

1. **QUICK CLOSE switch:**
   OFF: No change to the gate's normal operation.
   ON: When CLOSE EYES/Interrupt loop is deactivated it causes an opening or a stopped gate to close (ignores the Timer-to-Close).
2. **AC FAIL switch:**
   OPEN: Loss of AC power will cause the gate to open approximately 15 seconds after AC power fail and remain OPEN until AC power is restored (enabling the Timer-to-Close).
   BATT: With loss of AC power, gate will remain in present position and operator is powered from batteries.
3. **EXIT FAIL switch:**
   When set to OPEN, if the EXIT plug-in loop detector (Model LOOPDETLM) detects a fault, then the gate will open and remain open until fault is cleared. When set to CLOSE, then plug-in EXIT loop detector faults are ignored (EXIT loop is faulted and inoperative).
4. **ANTI-TAIL switch:**
   OFF: When CLOSE EYES/Interrupt loop is activated it causes a closing gate to stop and reverse.
   ON: When CLOSE EYES/Interrupt loop is activated it causes a closing gate to pause. Once the vehicle is clear the gate will continue to close.
5. **AUX RELAY switches:**
   Set the AUX RELAY switches as needed to obtain the desired function as shown on the following page.
6. **EYE/EDGE switches:**
   Set the EYE/EDGE switches as needed to obtain the desired OPEN or CLOSE functionality.
7. **1, 2, and 3 LEDs:**
   LEDs indicating the status of the EYE/EDGE inputs. Also used to check the firmware version of the expansion board:
   1. Locate the 1, 2, and 3 LEDs on the expansion board.
   2. Disconnect AC/DC power to the main control board for 15 seconds.
   3. Connect power. The 1, 2, and 3 LEDs will flash in sequence until the main control board firmware revision is displayed. When the green POWER LED glows solid the LED 1 will flash the version number, then stop, then the LED 2 will flash the revision number (for example: For version 5.1 when the green POWER LED is solid the LED 1 will flash 5 times, then stop, then the LED 2 will flash once).
8. **MAIN BOARD input:**
   Input Connection for the main board connector.
9. **Input LEDs:**
   LEDs indicating the status of the SBC, OPN, CLS, and STP inputs.
10. **Loop detector inputs:**
    Inputs for the Plug-In Loop Detectors (Model LOOPDETLM)
11. **Wireless edge input:**
    Input for the Wireless Edge Kit (Model LMWEKITU)

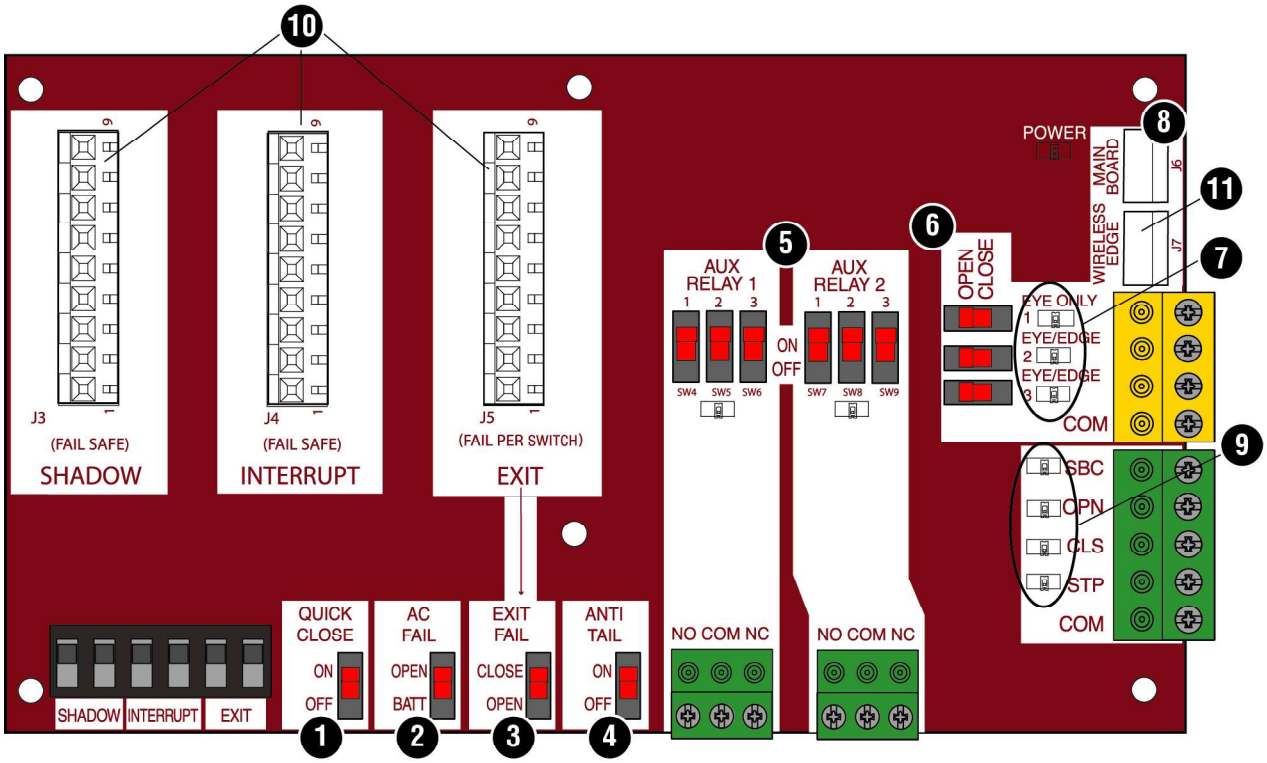

Auxiliary relay 1 and 2

Normally Open (N.O.) and Normally Closed (N.C.) relay contacts to control external devices, for connection of Class 2, low voltage (42 Vdc [34 Vac] max 5 Amps) power sources only. Function of relay contact activation determined by switch settings.

AUX RELAY SETTING	SWITCH SETTINGS			AUX RELAY 1	AUX RELAY 2
	1	2	3		
Off (no feature selected)	OFF	OFF	OFF	Relay always off. Use this Aux Relay setting to conserve battery power.	
Open Limit Switch	OFF	OFF	ON	Energizes at open limit. Use with SAMS (Sequenced Access Management System, jointly with barrier gate).	
Close Limit Switch	OFF	ON	OFF	Energizes when not at close limit. For an additional audible or visual display, connect an external light (low voltage).	
Gate Motion	OFF	ON	ON	Energizes when motor is on (gate in motion). For an additional audible or visual display, connect an external buzzer or light (low voltage).	
Pre-Motion Delay	ON	OFF	OFF	Energizes 3 seconds before gate motion and remains energized during gate motion. The onboard alarm will sound. For an additional audible or visual display, connect an external buzzer or light (low voltage).	Energizes 3 seconds before gate motion and remains energized during gate motion. For an additional audible or visual display, connect an external buzzer or light (low voltage).
Power	ON	ON	OFF	Energizes when AC power or solar power is present. There is approximately a 10-12 second delay before relay cutoff, after AC shutdown.	Energizes when on battery power. There is approximately a 10-12 second delay before relay cutoff, after AC shutdown.
Tamper	ON	OFF	ON	Energizes if gate is manually tampered with by being pushed off of close limit. For an additional audible or visual display, connect an external buzzer or light (low voltage).	
Cycle Quantity Feedback*	ON	ON	ON	The 1, 2, and 3 LEDs will blink out the cycle count (cycle count is stored on the control board). See below.	Red/green light functionality, see below.

* Cycle count

First, note the current Aux Relay switch positions. To determine the actual cycles that the gate operator has run (in thousands), set all three Aux Relay switches to the ON setting for Aux Relay 1. The Expansion Board's 1, 2, and 3 LEDs will blink out the cycle count, with 1 LED blinking 1000's, 2 LED blinking 10,000's, 3 LED blinking 100,000's, and simultaneously all three LED's blink 1,000,000's (e.g. 1 LED blinks 3 times, 2 LED blinks 6 times, and 3 LED blinks once. Cycle count is 163,000.). Cycle count displayed is between 1,000 and 9,999,000 cycles. After servicing, set Aux Relay switches back to their appropriate positions. Cycle count cannot be reset or changed. If under 1,000 cycles the 1, 2, and 3 LEDs will turn on for 10 seconds, then turn off.

NOTE: *The expansion board will flash the cycle count 3 times then all the LEDs will turn on solid for 10 seconds then turn off.*

RED/GREEN LIGHT FUNCTIONALITY						
Red light wired to AUX RELAY 1. Green light wired to AUX RELAY 2.						
GATE STATE	**AUX RELAY 1 SWITCHES**			**AUX RELAY 2 SWITCHES**		
	1 OFF	**2 OFF**	**3 OFF**	**1 ON**	**2 ON**	**3 ON**
Closed	Red light OFF*			Green light OFF		
Opening	Red light ON/Flash			Green light OFF		
Open	Red light OFF			Green light ON		
Closing	Red light ON/Flash			Green light OFF		
Defined Mid Stop	n/a			n/a		
Undefined Mid Stop	Red light ON			Green light OFF		
Timer more than 5 seconds	Red light OFF			Green light ON		
Timer less than 5 seconds	Red light ON/Flash			Green light OFF		
* For red light ON when gate is closed, set switch 1 on AUX RELAY 1 to ON						

Auxiliary relay wiring example

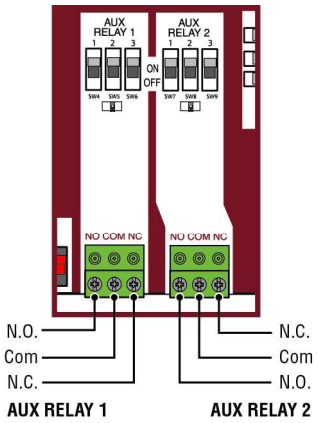

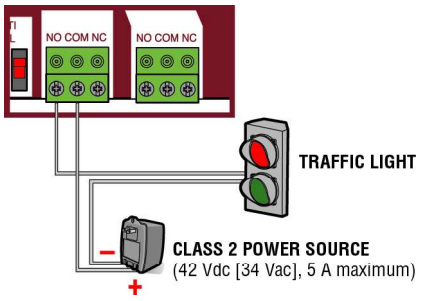

Wiring accessories to the expansion board

Refer to the chart below and the corresponding image for a description of the expansion board inputs.

1	**Wireless edge**	Connection for wireless edge receiver
2	**Entrapment Protection Device Inputs (4 terminals total), Open or Close Direction based on switch setting next to inputs**	EYES ONLY Input: Open or Close Direction Photoelectric Sensors, Close: reverses fully, Open: reverses 4 seconds EYES/EDGE Input(s): Open or Close Direction Photoelectric Sensors, Infra-red detector wired or Edge Sensor, reverses 4 seconds
3	**Single Button Control, SBC (2 terminals)**	Gate command sequence - Open, Stop, Close, Stop, ... Soft Open ,Soft Close, Soft Stop (maintained switch does not override external safeties and does not reset alarm condition)
4	**Open Input (& common) (3-Button Control Station, 4 terminals total)**	Open command - opens a closed gate. Soft open (maintained switch does not override external safeties and does not reset alarm condition) If maintained, pauses Timer-to-Close at OPEN limit. Opens a closing gate and holds open an open gate.
5	**Close Input (& common) (3-Button Control Station, 4 terminals total)**	Close command - closes an open gate. Soft close (maintained switch does not override external safeties and does not reset alarm condition).
6	**Stop Input (& common) (3-PB station, 4 terminals total)**	Stop command - stops a moving gate. Hard stop (maintained switch overrides Open and Close commands and resets alarm condition) If maintained, pauses Timer-to-Close at OPEN limit. Overrides an Open or Close command.
7	**Exit Loop Input (2 terminals)**	Loop wire connection for plug-in loop detector when loop is inside secured area near gate. Open command - opens a closed gate. Soft open (maintained switch does not override external safeties and does not reset alarm condition) If maintained, pauses Timer-to-Close at OPEN limit. Opens a closing gate and holds open an open gate.
8	**Shadow Loop Input (2 terminals)**	Loop wire connection for plug-in loop detector when loop is positioned under the gate. • Holds open gate at open limit • Disregarded during gate motion • Pauses Timer-to-Close at Open Limit
9	**Interrupt Loop Input (2 terminals)**	Loop wire connection for plug-in loop detector when loop is along the side of the gate. • Holds open gate at open limit • Stops and reverses a closing gate • Pauses Timer-to-Close at Open Limit

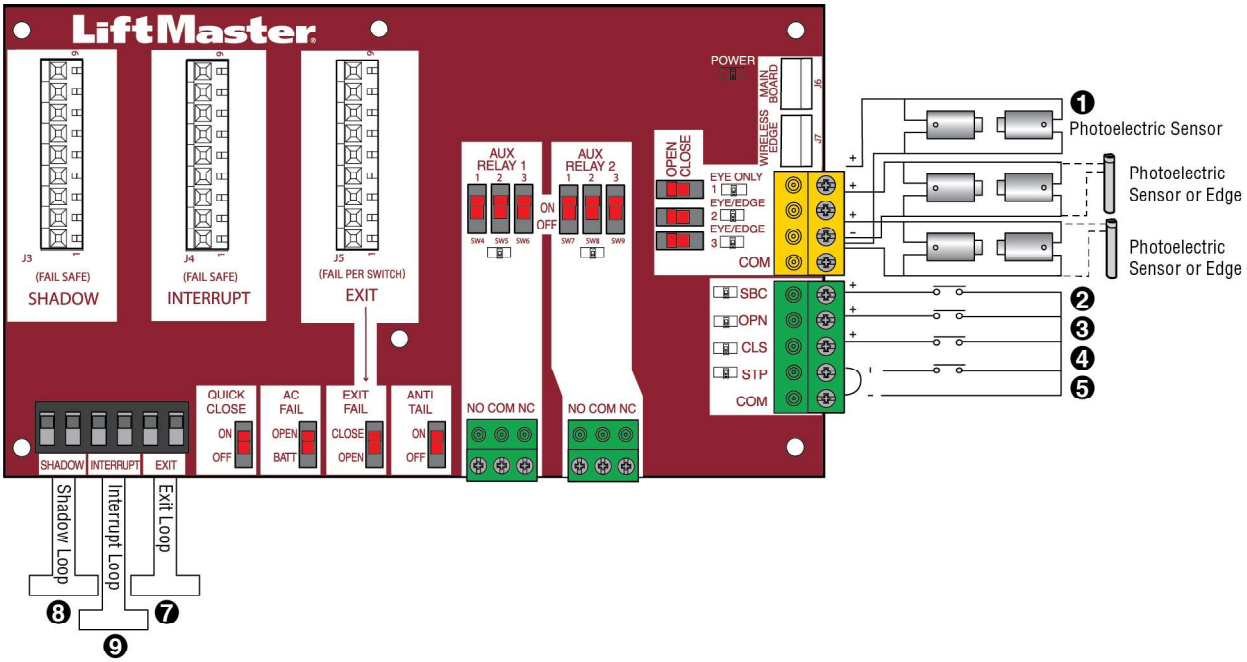

IMPORTANT SAFETY INSTRUCTIONS

⚠ WARNING

To reduce the risk of SEVERE INJURY or DEATH:

- READ AND FOLLOW ALL INSTRUCTIONS.
- ANY maintenance to the operator or in the area near the operator MUST NOT be performed until disconnecting the electrical power (AC or solar and battery) and locking-out the power via the operator power switch. Upon completion of maintenance the area MUST be cleared and secured, at that time the unit may be returned to service.
- Disconnect power at the fuse box BEFORE proceeding. Operator MUST be properly grounded and connected in accordance with national and local electrical codes. ***NOTE:*** *The operator should be on a separate fused line of adequate capacity.*
- NEVER let children operate or play with gate controls. Keep the remote control away from children.
- ALWAYS keep people and objects away from the gate. NO ONE SHOULD CROSS THE PATH OF THE MOVING GATE.
- The entrance is for vehicles ONLY. Pedestrians MUST use separate entrance.
- Test the gate operator monthly. The gate MUST reverse on contact with an object or reverse when an object activates the noncontact sensors. After adjusting the force or the limit of travel, retest the gate operator. Failure to adjust and retest the gate operator properly can increase the risk of INJURY or DEATH.
- Use the manual disconnect release ONLY when the gate is NOT moving.
- KEEP GATES PROPERLY MAINTAINED. Read the owner's manual. Have a qualified service person make repairs to gate hardware.
- ALL maintenance MUST be performed by a LiftMaster professional.
- Activate gate ONLY when it can be seen clearly, is properly adjusted and there are no obstructions to gate travel.
- To reduce the risk of FIRE or INJURY to persons use ONLY LiftMaster part 29-NP712 for replacement batteries.
- **SAVE THESE INSTRUCTIONS.**

⚠ CAUTION

- ALWAYS wear protective gloves and eye protection when changing the battery or working around the battery compartment.

Maintenance Chart

Disconnect all power (AC, solar, battery) to the operator before servicing. The operator's AC Power switch ONLY turns off AC power to the control board and DOES NOT turn off battery power. ALWAYS disconnect the batteries to service the operator.

DESCRIPTION	TASK	CHECK AT LEAST ONCE EVERY		
		MONTH	6 MONTHS	3 YEARS
Entrapment Protection Devices	Check and test inherent (built into the operator) and external devices for proper operation	X		
Warning Signs	Make sure they are present and replace if worn or broken, see *Accessories*	X		
Manual Disconnect	Check and test for proper operation		X	
Sprockets and Chains	Check for excessive slack and lubricate		X	
Gate	Inspect for wear or damage; ensure it still complies with ASTM F2200, see page 5	X		
Accessories	Check all for proper operation		X	
Electrical	Inspect all wire connections		X	
Chassis Mounting Bolts	Check for tightness		X	
Operator	Inspect for wear or damage		X	
Batteries	Replace			X

NOTES:

- *Severe or high cycle usage will require more frequent maintenance checks.*
- *Limits may have to be reset after any major drive chain adjustments.*
- *If lubricating chain, use only lithium spray. Never use grease or silicone spray.*
- *It is suggested that while at the site voltage readings be taken at the operator. Using a digital voltmeter, verify that the incoming voltage to the operator is within ten percent of the operator's rating.*

Batteries

Batteries will degrade over time depending on temperature and usage. The operator alarm will beep 3 times with a command if the battery is low. Batteries do not perform well in extremely cold temperatures. For best performance, the batteries should be replaced every 3 years. Use only LiftMaster part 29-NP712 for replacement batteries. The batteries contain lead and need to be disposed of properly.

The operator comes with two 7AH batteries. Two 33AH batteries (A12330SGLPK), with Solar Harness Kit (K94-37236) may be used in place of the 7AH batteries.

Drive Train

Over time, the drive chain on the operator will stretch and need to be tightened. To tighten the drive chain adjust either of the two chain eye bolts. ***NOTE:*** *The chain should have no more than 1 inch of sag for every 10 feet of chain length.*

⚠ WARNING

To protect against fire and electrocution:

- DISCONNECT power (AC or solar and battery) BEFORE installing or servicing operator.

For continued protection against fire:

- Replace ONLY with fuse of same type and rating.

Diagnostic Codes

NOTE: *When cycling or disconnecting power (ac/dc) to the control board, it is recommended that you unplug the J15 plug.*

To View the Codes

The codes will show on the diagnostic display.

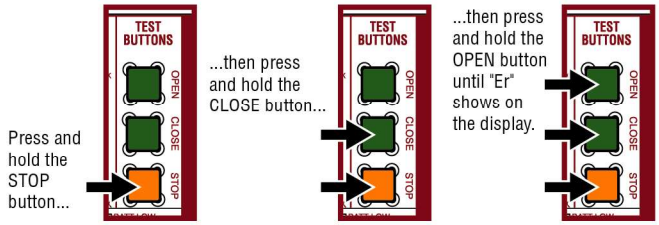

The operator will show the code sequence number followed by the code number:

CODE SEQUENCE NUMBER
The first number shown is the most recent code (example: "01"). The display will show the sequence of codes that occurred starting with "01" and going up to code "20".

A SECOND LATER....

CODE NUMBER
The second number shown after the code sequence number is the code itself (31-99, example" "31"). Refer to the chart on the following page for an explanation of each code.

To Scroll Through the Saved Codes

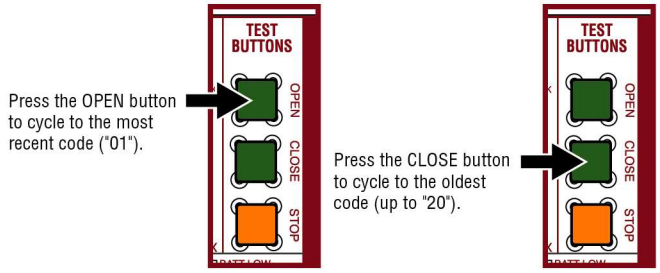

The operator will only keep track of up to 20 codes, then will start saving over the oldest codes as new codes occur.

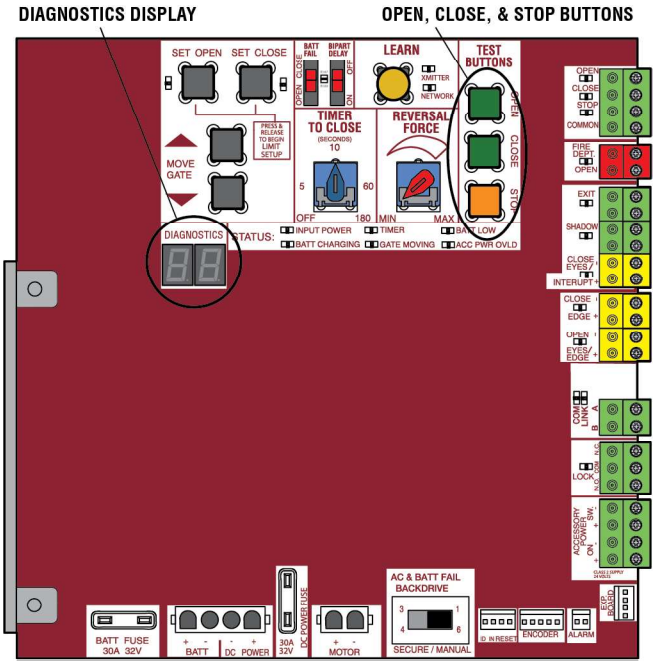

To Exit

Press and release the STOP button to exit. The display will also time out after two minutes of inactivity.

To Reset the Code History

1. Press and hold the STOP button for six seconds. The display will show "Er" then "CL" alternately for six seconds.
2. Release the STOP button. The code history has now been reset and the display will show "- -" until a new code occurs.
3. Press and release the STOP button to exit.

Diagnostic Codes Table

Some codes are saved in the code history and some are not. If a code is not saved it will briefly appear on the display as it occurs, then disappear.

LiftMaster System | Installed System | Informational | External Entrapment Protection | Inherent Entrapment Protection

Code	Meaning	Solution	Saved
31	Main control board has experienced an internal failure.	Disconnect all power, wait 15 seconds, then reconnect power (reboot). If issue continues, replace main control board.	NO
34	Absolute Position Encoder Error, not getting position information from encoder	Check APE assembly and wiring connections. Replace the APE assembly if necessary.	YES
35	Max-Run-Time Exceeded Error	Check for an obstruction, then reprogram the limits.	YES
36	Product ID Error	Was the control board just replaced? If so, erase limits, enter limit setup mode and set limits. If not, disconnect all power, wait 15 seconds, then reconnect power before changing product ID harness.	YES
37	Product ID Failure	Unplug product ID harness then plug back in. Disconnect all power, wait 15 seconds, then reconnect power before replacing product ID harness.	YES
38	Hard Stop Limit (Arm 1)	Limit may be set too tightly against a non-resilient hard stop (re-adjust limit). Operator may be at end of travel (re-adjust mounting).	NO
40	Battery overvoltage	Too much voltage on the battery. Check harness. Make sure there is NOT a 24V battery on a 12V system.	YES
41	Battery overcurrent	Possible short of the battery charge harness. Check harness. Make sure you do NOT have a 12V battery on a 24V system.	YES
42	No battery at boot up	Check battery connections and installation. Replace batteries if depleted to less than 20V on a 24V system or less than 10V on a 12V system. Make sure there is NOT a single 12V battery on a 24V system.	YES
43	Exit Loop Error	Failure or missing loop (SHORT or OPEN - LiftMaster Plug-in Loop Detector only) Check loop wiring throughout connection. May be a short in the loop, or an open connection in the loop.	YES
44	Shadow Loop Error		
45	Interrupt Loop Error		
46	Wireless edge battery low	Replace batteries in wireless edge.	YES
50	Run-Distance Error	The limits are less than the minimum requirement or longer than what was learned. Check limit positions and proper switch function. Run-distance can be re-learned by setting the handing again.	YES
53	Brownout occurred	AC/DC board supply dipped below allowable level. Review power supply and wiring. If rebooting, ensure enough time for discharge of power to force a fresh boot.	YES
54	Wireless Second Operator Communication Error	Check the second operator for power. If OFF, restore power and try to run the system. If powered, deactivate the wireless feature and then re-learn the second operator.	YES
60	Minimum number of monitored entrapment protection devices not installed.	Review monitored entrapment protection device connections. Slide gate operators require a minimum of two external safety devices; one in the close and one in the open direction.	NO
61	CLOSE EYE/INTERRUPT held more than 3 minutes	Check wired input on main control board; check for alignment or obstruction.	YES
62	CLOSE EDGE held more than 3 minutes		
63	OPEN EYE/EDGE held more than 3 minutes		
64	CLOSE EYE/INTERRUPT held more than 3 minutes	Check wired input on expansion board; check for alignment or obstruction.	YES
65	CLOSE EYE/EDGE held more than 3 minutes		
66	OPEN EYE/EDGE held more than 3 minutes		
67	Wireless edge triggered more than 3 minutes	Check wired input for wiring issue or obstruction.	YES
68	Wireless edge loss of monitoring	Check wireless edge inputs.	YES

TROUBLESHOOTING

Code	Meaning	Solution	Saved
69	Wireless edge triggered	IF an obstruction occurred, no action required. If an obstruction did NOT occur, check inputs and wiring.	NO
70	CLOSE EYE/INTERRUPT triggered, causing reversal, preventing close, or resetting TTC	IF an obstruction occurred, no action required. If an obstruction did NOT occur, check alignment, inputs, and wiring on main control board	NO
71	CLOSE EDGE triggered, causing reversal, NO preventing close, or canceling TTC		
72	OPEN EYE/EDGE triggered, causing reversal or preventing opening		
73	CLOSE EYE/INTERRUPT triggered, causing reversal, preventing close, or resetting TTC	IF an obstruction occurred, no action required. If an obstruction did NOT occur, check alignment, inputs, and wiring on expansion board.	NO
74	CLOSE EYE/EDGE triggered, causing reversal and preventing close or canceling TTC		
75	OPEN EYE/EDGE triggered, causing reversal or preventing opening		
80	Close input (EYE/EDGE) communication fault from other operator	Check inputs and communication method between operators, either wired bus or radio. Ensure operator is powered. May have to erase the wireless communication and reprogram the two operators.	YES
81	Open input (EYE/EDGE) communication fault from other operator		
82	Close input (EYE/EDGE) communication fault (expansion board)	Check the connections between the main board and the expansion board.	YES
83	Open input (EYE/EDGE) communication fault (expansion board)		
84	Non-monitored device detected on the wireless safety system	Non-monitored contact closure devices are not supported. Make sure connected devices are monitored. Check edges for proper orientation and resistive end cap connection.	YES
91	Force Reversal (Operator 1)	Check for obstruction. If no obstruction, check that the mechanical assembly is engaged and free to move. See section on Limit and Force Adjustment, and Obstruction Test.	YES
93	RPM / STALL Reversal (Operator 1)	Check for obstruction. If no obstruction, check the operator wiring and that the mechanical assembly is engaged and free to move. Replace APE assembly.	YES
99	Normal Operation	No action required	YES

Control Board LEDs

STATUS LEDS		
INPUT POWER	OFF	OFF state
	ON	AC charger or Solar power available
BATT CHARGING	OFF	Not charging
	ON	Three stage battery charging
TIMER	OFF	The timer is disabled
	ON	The timer is enabled
	MEDIUM BLINK (1 blink per second)	The timer is running
	FAST BLINK (2 blinks per second)	The timer is paused
	FASTEST BLINK (8 blinks per second)	The timer is canceled
GATE MOVING	OFF	The gate is stopped
	ON	The gate is opening or closing
	MEDIUM BLINK (1 blink per second)	Operator is in E1 (single entrapment)
	FASTEST BLINK (8 blinks per second)	The operator is in E2 (double entrapment)
BATT LOW	OFF	No battery error
	ON	Battery low
	MEDIUM BLINK (1 blink per second)	Battery critically low
ACC PWR OVLD	OFF	Accessory power is okay
	ON	Accessory overload protector opened

INPUT LEDS		
OPEN, CLOSE, STOP INPUT	OFF	Input inactive
	ON	Input active
	BLINK	Input active on other operator
FIRE DEPT INPUT	OFF	Input inactive
	ON	Input active
	BLINK	Input active on other operator
EXIT	OFF	Input inactive
	ON	Input active
	BLINK	Input active on other operator
SHADOW	OFF	Input inactive
	ON	Input active
	BLINK	Input active on other operator
CLOSE EYES/INTERRUPT	OFF	Input inactive
	ON	Input active
	BLINK	Input active on other operator
CLOSE EDGE	OFF	Input inactive
	ON	Input active
	BLINK	Input active on other operator
OPEN EYES/EDGE	OFF	Input inactive
	ON	Input active
	BLINK	Input active on other operator
LOCK	OFF	Maglock relay inactive
	ON	Maglock relay active

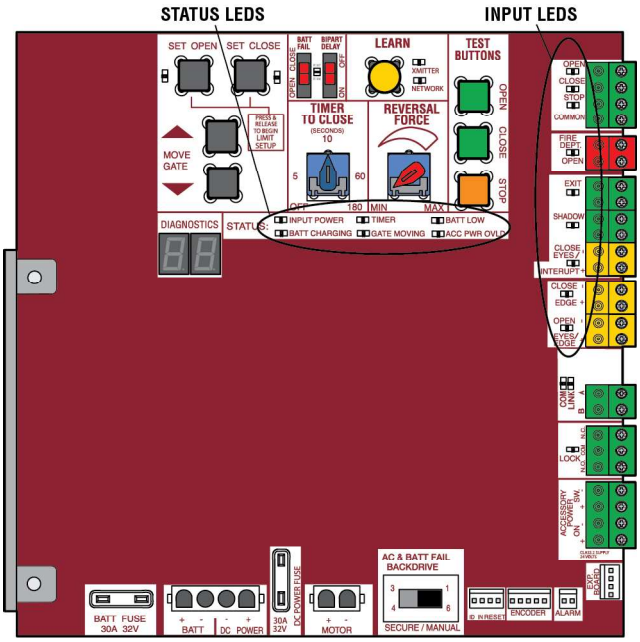

Troubleshooting Chart

SYMPTOM	POSSIBLE CAUSES	SOLUTIONS
Operator does not run and diagnostic display not on.	a. No power to control board b. Open fuse c. If on battery power only, low or dead batteries d. Defective control board	a. Check AC and battery power b. Check fuses c. Charge batteries by AC or solar power or replace batteries d. Replace defective control board
Control board powers up, but motor does not run.	a. Reset switch is stuck b. Stop button active or jumper not in place for stop circuit c. If on battery power only, low or dead batteries d. Open or Close input active e. Entrapment Protection Device active f. Vehicle loop detector or probe active g. Defective control board	a. Check reset switch b. Check Stop button is not “stuck on”, or verify that the stop button is a normally closed circuit, or put a jumper on the stop circuit. c. Charges batteries by AC or solar power or replace batteries d. Check all Open and Close inputs for a “stuck on” input e. Check all Entrapment Protection Device inputs for a “stuck on” sensor f. Check all vehicle detector inputs for a “stuck on” detector g. Replace defective control board
Gate moves, but cannot set correct limits.	a. Gate does not move to a limit position b. Gate is too difficult to move c. Limits are set too close (slide gate applications only)	a. Use manual disconnect, manually move gate, and ensure gate moves easily limit to limit. Repair gate as needed. b. Gate must move easily and freely through its entire range, limit to limit. Repair gate as needed. c. Ensure the gate moves at least four feet between the OPEN limit and the CLOSE limit.
Gate does not fully open or fully close when setting limits.	a. Gate does not move to a limit position b. Gate is too difficult to move	a. Use manual disconnect, manually move gate, and ensure gate moves easily limit to limit. Repair gate as needed. b. Gate must move easily and freely through its entire range, limit to limit. Repair gate as needed.
Operator does not respond to a wired control/command (example: Open, Close, SBC, etc.)	a. Check Open and Close command input LEDs b. Stop button is active c. Reset button is stuck d. If on battery power only, low or dead batteries e. Entrapment Protection Device active f. Vehicle loop detector or vehicle probe active	a. Check all Open and Close inputs for a “stuck on” input b. Check Stop button is not “stuck on” c. Check Reset button d. Charges batteries by AC or solar power or replace batteries e. Check all Entrapment Protection Device inputs for a “stuck on” sensor f. Check all vehicle detector inputs for a “stuck on” detector
Operator does not respond to a wireless control or transmitter	a. Check XMITTER LED when wireless control is active b. Stop button is active c. Reset button is stuck d. Poor radio reception	a. Activate wireless control and check XMITTER LED is on. Re-learn wireless control/transmitter to control board. Replace wireless control as needed. b. Check Stop button is not “stuck on” c. Check Reset button d. Check if similar wired control operates correctly. Check if wireless controls works properly when within a few feet of operator. Check operator’s antenna and antenna wire. Check other wireless controls or devices.
Gate stops during travel and reverses immediately.	a. Control (Open, Close) becoming active b. Vehicle loop detector active c. Low battery voltage	a. Check all Open and Close inputs for an active input b. Check all vehicle detector inputs for an active detector c. Battery voltage must be 23.0 Vdc or higher. Charge batteries by AC or solar power or replace batteries

TROUBLESHOOTING

SYMPTOM	POSSIBLE CAUSES	SOLUTIONS
Gate opens, but will not close with transmitter or Timer-to-Close.	a. Open control active b. Vehicle loop detector active c. Loss of AC power with AC FAIL set to OPEN d. Low battery with LOW BATT set to OPEN e. Fire Dept input active f. Timer-to-Close not set g. Close Entrapment Protection Device active	a. Check all Open inputs for an active input b. Check all vehicle detector inputs for an active detector c. Check AC power and AC Fail option setting d. Check if AC power is available. If no AC power, then running on batteries and battery voltage must be 23.0 Vdc or higher. Charge batteries by AC or solar power or replace batteries. e. Check Fire Dept input f. Check Timer-to-Close (TTC) setting g. Check all Entrapment Protection Device inputs for an active sensor
Gate closes, but will not open.	a. Vehicle loop detector active b. Low battery with LOW BATT option set to CLOSE	a. Check all vehicle detector inputs for an active detector b. Check if AC power is available. If no AC power, then running on batteries and battery voltage must be 23.0 Vdc or higher. Charge batteries by AC or solar power or replace batteries.
Exit loop activation does not cause gate to open.	a. Exit vehicle detector setup incorrectly b. Defective Exit loop detector c. Low battery with LOW BATT option set to CLOSE	a. Review Exit loop detector settings. Adjust settings as needed. b. Replace defective Exit loop detector. c. Check if AC power is available. If no AC power, then running on batteries and battery voltage must be 23.0 Vdc or higher. Charge batteries by AC or solar power or replace batteries.
Interrupt loop does not cause gate to stop and reverse.	a. Vehicle detector setup incorrectly b. Defective vehicle loop detector c. Anti-tail set to ON	a. Review Interrupt loop detector settings. Adjust settings as needed. b. Replace defective Interrupt loop detector. c. Set anti-tail to OFF.
Shadow loop does not keep gate at open limit.	a. Vehicle detector setup incorrectly b. Defective vehicle loop detector	a. Review Shadow loop detector settings. Adjust settings as needed. b. Replace defective Shadow loop detector.
Obstruction in gate's path does not cause gate to stop and reverse.	a. Force adjustment needed	a. Refer to the Adjustment section to conduct the obstruction test and perform the proper force adjustment that is needed.
Photoelectric sensor does not stop or reverse gate.	a. Incorrect photoelectric sensor wiring b. Defective photoelectric sensor	a. Check photoelectric sensor wiring. Retest that obstructing photoelectric sensor causes moving gate to stop, and may reverse direction. b. Replace defective photoelectric sensor. Retest that obstructing photoelectric sensor causes moving gate to stop, and may reverse direction.
Edge Sensor does not stop or reverse gate.	a. Incorrect edge sensor wiring b. Defective edge sensor	a. Check edge sensor wiring. Retest that activating edge sensor causes moving gate to stop and reverse direction. b. Replace defective edge sensor. Retest that activating edge sensor causes moving gate to stop and reverse direction.
Alarm sounds for 5 minutes or alarm sounds with a command.	a. Double entrapment occurred (two obstructions within a single activation)	a. Check for cause of entrapment (obstruction) detection and correct. Press the reset button to shut off alarm and reset the operator.
Alarm beeps three times with a command.	a. Low battery	a. Check if AC power is available. If no AC power, then running on batteries and battery voltage must be 23.0 Vdc or higher. Charge batteries by AC or solar power or replace batteries
On dual-gate system, incorrect gate opens first or closes first.	a. Incorrect Bipart switch setting	a. Change setting of both operator's Bipart switch settings. One operator should have Bipart switch ON (operator that opens second) and the other operator should have Bipart switch OFF (operator that opens first).
Alarm beeps when running.	a. Expansion board setting b. Constant pressure to open or close is given	a. Pre-warning is set to "ON" b. Constant pressure to open or closed is given

TROUBLESHOOTING

SYMPTOM	POSSIBLE CAUSES	SOLUTIONS
Expansion board function not controlling gate.	a. Defective main board to expansionboard wiring b. Incorrect input wiring to expansion board c. Defective expansion board or defective main board	a. Check main board to expansion board wiring. If required, replace wire cable. b. Check wiring to all inputs on expansion board. c. Replace defective expansion board or defective main board
Maglock not working correctly.	a. Maglock wired incorrectly	a. Check that Maglock is wired to N.C. and COM terminals. Check that Maglock has power (do not power maglock from control board accessory power terminals). If shorting lock's NO and COM wires does not activate Maglock, then replace Maglock or Maglock wiring (refer to Wiring Diagrams).
Solenoid lock not working correctly.	a. Solenoid wired incorrectly	a. Check that Solenoid is wired to N.O. and COM terminals. Check that Solenoid has power (do not power solenoid from control board accessory power terminals). If shorting lock's NC and COM wires does not activate Solenoid, then replace Solenoid lock or Solenoid wiring (refer to Wiring Diagrams).
Switched (SW) Accessory power remaining on.	a. In limit setup mode	a. Learn the limits
Accessories connected to Switch (SW) Accessory power not working correctly, turning off, or resetting.	a. Normal behavior	a. Move accessory to accessory power "ON"
Accessories connected to Accessory power not working correctly, turning off, or resetting.	a. Accessory power protector active b. Defective control board	a. Disconnect all accessory powered devices and measure accessory power voltage (should be 23 – 30 Vdc). If voltage is correct, connect accessories one at a time, measuring accessory voltage after every new connection. b. Replace defective control board
Quick Close not working correctly.	a. Quick Close setting incorrect b. Interrupt loop detector c. Defective Expansion board	a. Check that Quick Close setting is ON b. Check operation of Interrupt Loop detector c. Replace defective Expansion board
Anti-Tailgating not working correctly.	a. Anti-Tail setting incorrect b. Interrupt loop detector c. Defective Expansion board	a. Check that Anti-Tail setting is ON b. Check operation of Interrupt Loop detector c. Replace defective Expansion board
AUX Relay not working correctly.	a. AUX Relay setting incorrect b. AUX Relay wiring incorrect c. Defective Expansion board	a. Check AUX Relay switches settings b. Check that wiring is connected to either N.O. and COM or to N.C. and COM. c. Set AUX Relay to another setting and test. Replace defective expansion board.
Solar operator not getting enough cycles per day.	a. Insufficient panel wattage b. Excessive accessory power draw c. Old batteries d. Solar panels are not getting enough sunlight	a. Add more solar panels b. Reduce the accessory power draw by using LiftMaster low power accessories c. Replace batteries d. Relocate the solar panels away from obstructions (trees, buildings, etc.)
Solar operator, insufficient standby time.	a. Insufficient panel wattage b. Excessive accessory power draw c. Battery capacity too low	a. Add more solar panels b. Reduce the accessory power draw by using LiftMaster low power accessories c. Use batteries with higher amp hour (AH) rating

Step 6 Solar Panel(s)

SOLAR PANELS ARE NOT PROVIDED. SEE ACCESSORIES

Solar Application Requirements

- A minimum of two 10W solar panels in series (Model SP10W12V).
- A maximum of six 10W solar panels (Model SP10W12V).
- Solar Harness Kit (Model K94-37236).
- A heater cannot be used with a solar application.

Solar Zones

Solar panel recommendations are based upon the average solar radiation and the temperature effects on batteries in the given zones as shown on the map below. Local geography and weather conditions may require additional solar panels. Solar powered gate operator installations are not supported in northern climates due to cold weather and a reduced number of hours of sunlight during the winter months. The cycles/day ratings are approximations. Ratings vary based on gate construction, installation, and temperature. Solar panels cannot be installed in areas that experience long periods of heavy fog, lake effect snow, or rain.

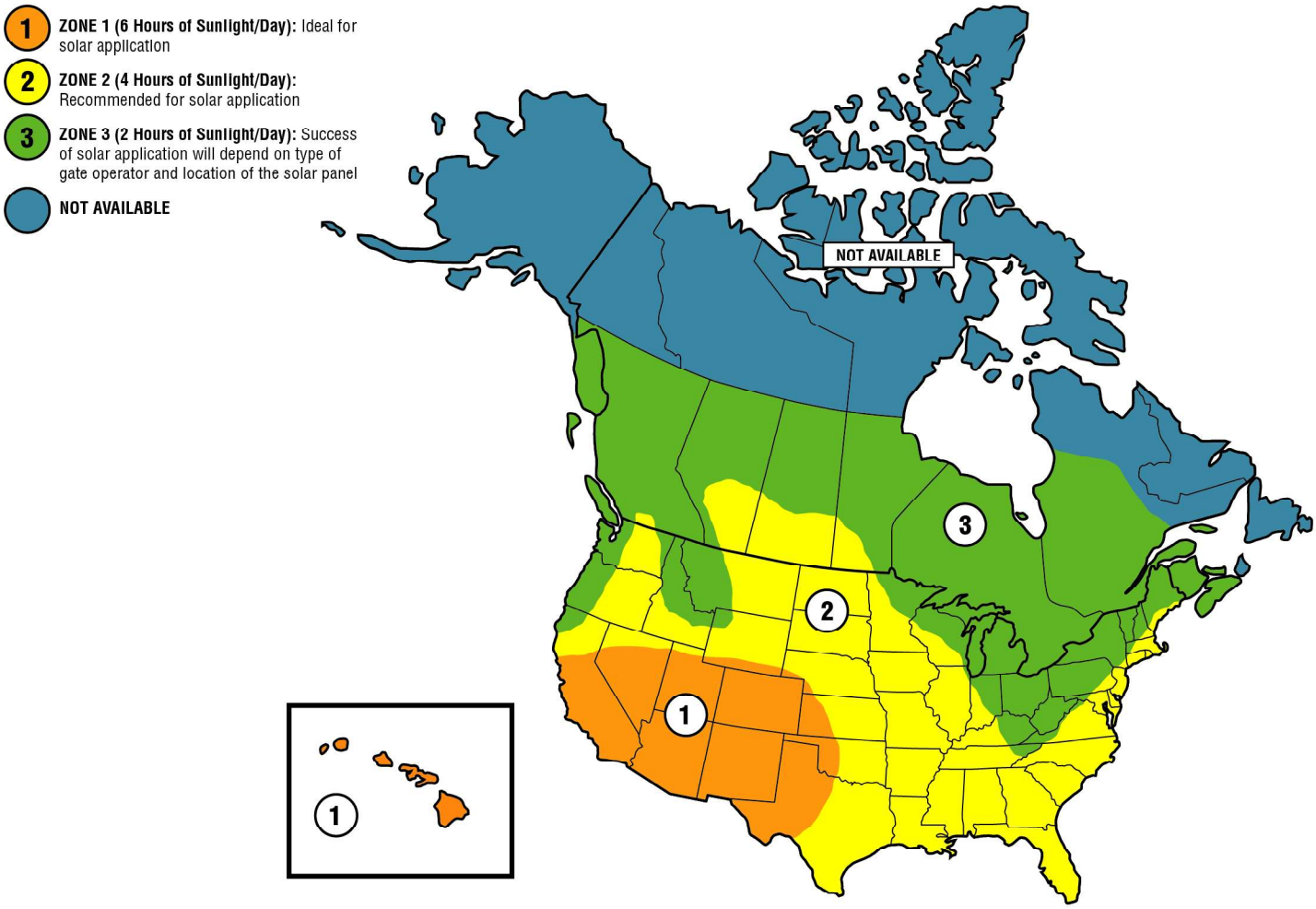

Solar usage guide

Typical System Standby Battery Current Consumption (mA)	
System voltage	24V
Main board with no radios programmed	2.7 mA
One or more LiftMaster® remote controls programmed	+1 mA
MyQ® device or wireless dual gate programmed	+2.4 mA
Expansion board	+11.1 mA
Per loop detector LOOPDETLM (up to 3 loop detectors can be plugged in to the expansion board)	+3.8 mA
Add up current draw by feature and accessory to determine total current draw	

NOTE: *The use of photoelectric sensor heaters (models LMRRUL and LMTBUL) is NOT recommended in solar applications.*

SOLAR GATE CYCLES PER DAY							
	BATTERY CURRENT DRAW (mA)	ZONE 1		ZONE 2		ZONE 3	
		7AH batteries	33AH batteries	7AH batteries	33AH batteries	7AH batteries	33AH batteries
10W SOLAR PANEL	5	26	28	15	17		
	15	22	24	12	13		
	20	20	22		11		
	40	12	14				
	60						
20W SOLAR PANEL (Two 10W 12V panels in series)	5	57	67	34	40	14	16
	15	52	62	30	36	10	12
	20	50	60	28	33		11
	50	36	45	15	20		
	100	15	23				
40W SOLAR PANEL (Two 20W 12V panels in series)	5	108	152	65	92	27	38
	15	103	147	60	87	23	34
	20	100	144	58	84	21	32
	100	58	99	21	44		
	200	14	47				
60W SOLAR PANEL	5	134	240	81	146	34	61
	15	128	234	76	140	29	56
	20	125	231	73	137	27	54
	100	82	181	34	92		18
	250	12	95		20		

Position

The location of the panel(s) is critical to the success of the installation. In general, the panel(s) should be mounted using the provided angle bracket facing **due south**. The solar panel(s) should be mounted in an area clear of all obstructions and shade from buildings and trees. If the panel(s) is not casting a shadow, the battery is not being charged.

NOTE: *Tall trees or buildings that do not shade the solar panel(s) in the summer could shade the solar panel(s) during the winter months when the sun sits lower in the sky.*

MAXIMUM WIRE LENGTH			
AMERICAN WIRE GAUGE (AWG)	20 WATTS OF PANELS	40 WATTS OF PANELS	60 WATTS OF PANELS
16	235 (71.6 m)	115 (35.1 m)	80 (24.4 m)
14	375 (114.3 m)	190 (57.9 m)	125 (38.1 m)
12	600 (182.9 m)	300 (91.4 m)	200 (61 m)
10	940 (286.5 m)	475 (144.8 m)	315 (96 m)
Chart assumes: copper wire, 65°C, 5% drop, 30V nominal			

TIP: *The area around the solar panel(s) should be clear of shadows or obstructions to the sun for a 180° arc east to west.*

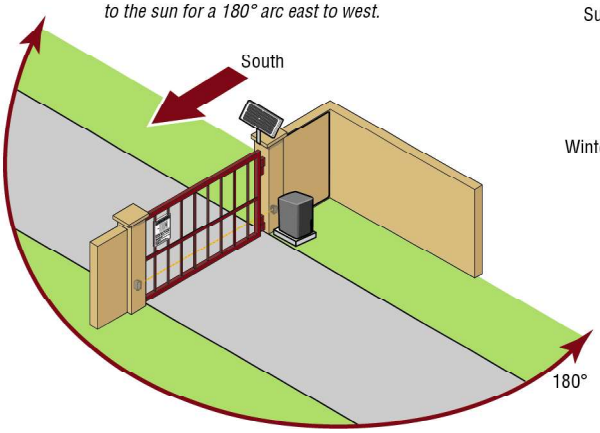

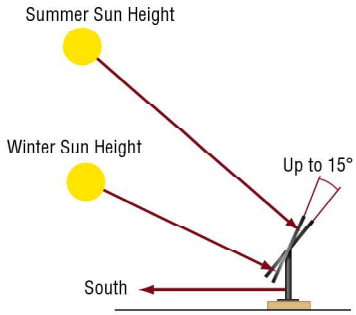

TIP: *To optimize the system for winter operation the angle can be increased an additional 15° (solar panel(s) sits more vertical).*

Installation

Solar panel(s) MUST be installed facing south. Use a compass to determine direction. Below are general instructions for installing the solar panel(s). Your installation may vary slightly depending on the solar panel purchased.

1. Position the mounting bracket on the mounting surface. Mark and drill holes.
2. Secure the solar panel to the mounting bracket using the hex bolts, hex nuts and washers provided.
3. Secure the solar panel to the mounting surface using lag screws provided.

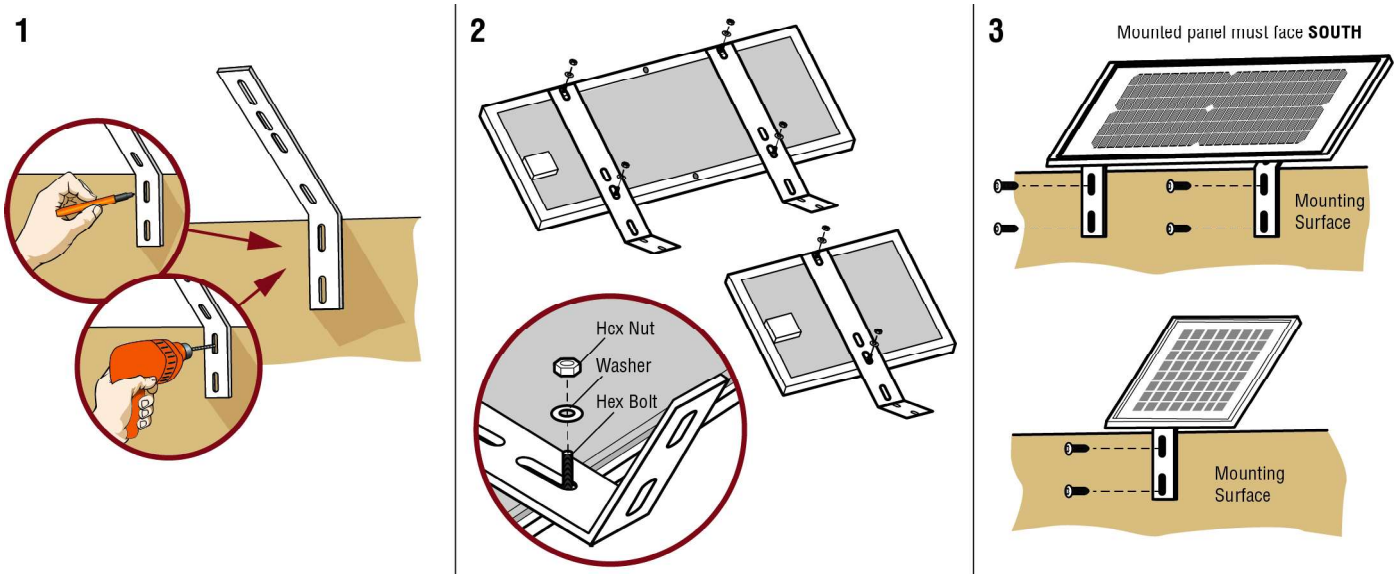

Wire the Batteries

Solar panel applications require the Solar Harness Kit model K94-37236, see *Accessories*.

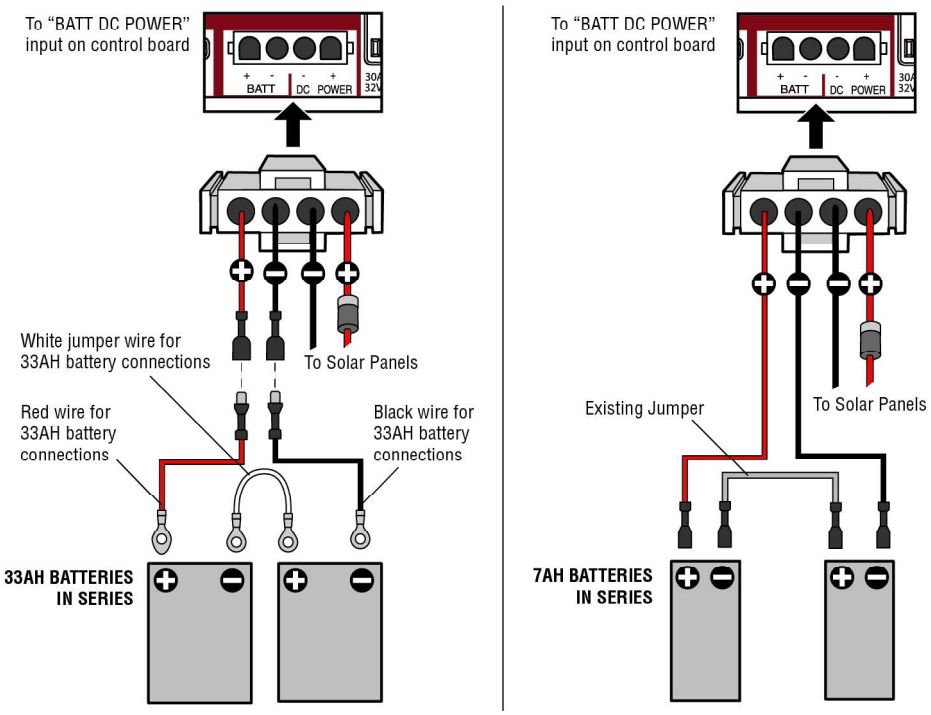

Wire the solar panels

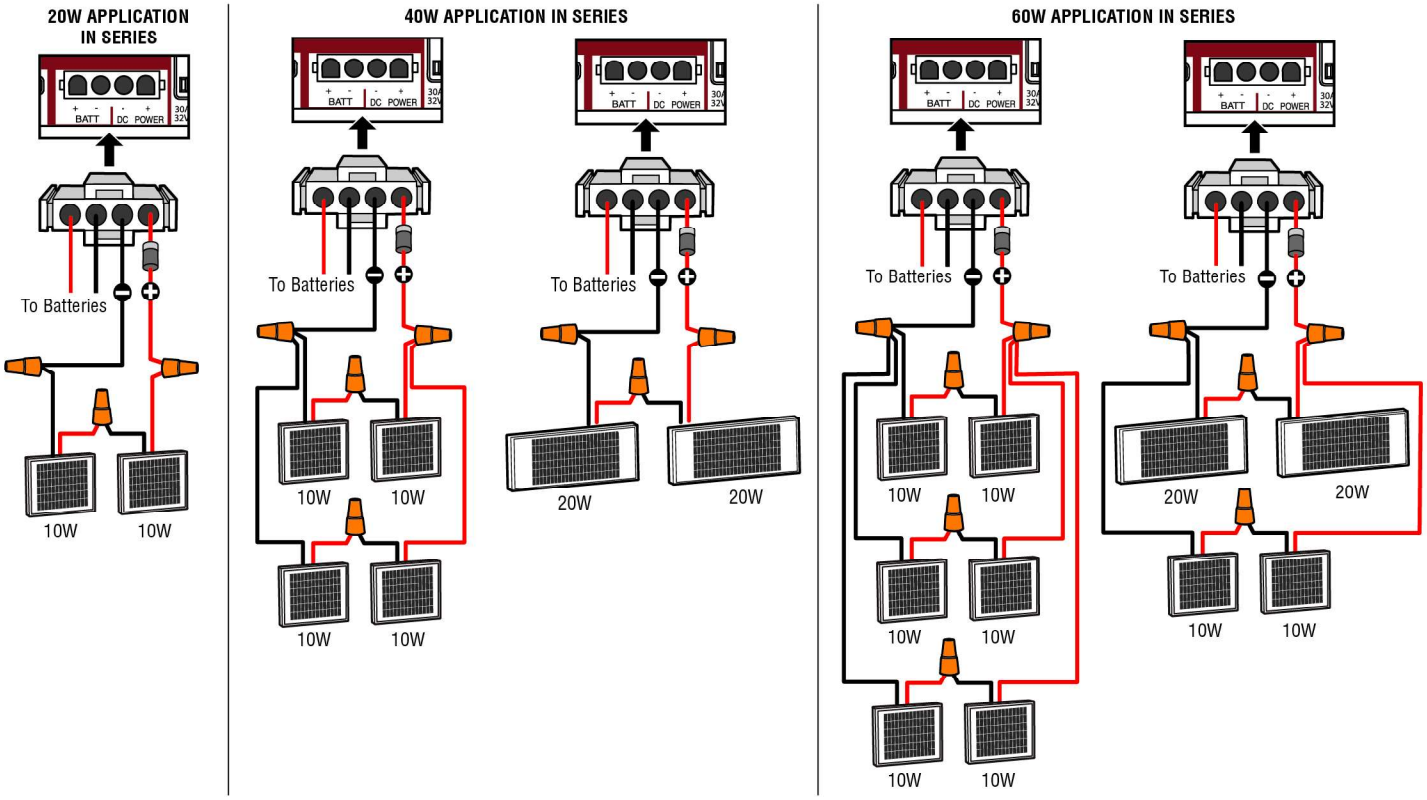

Proceed to the Dual Gate section (if applicable) or proceed to the Adjustment section.

SAMS wiring with relays not energized

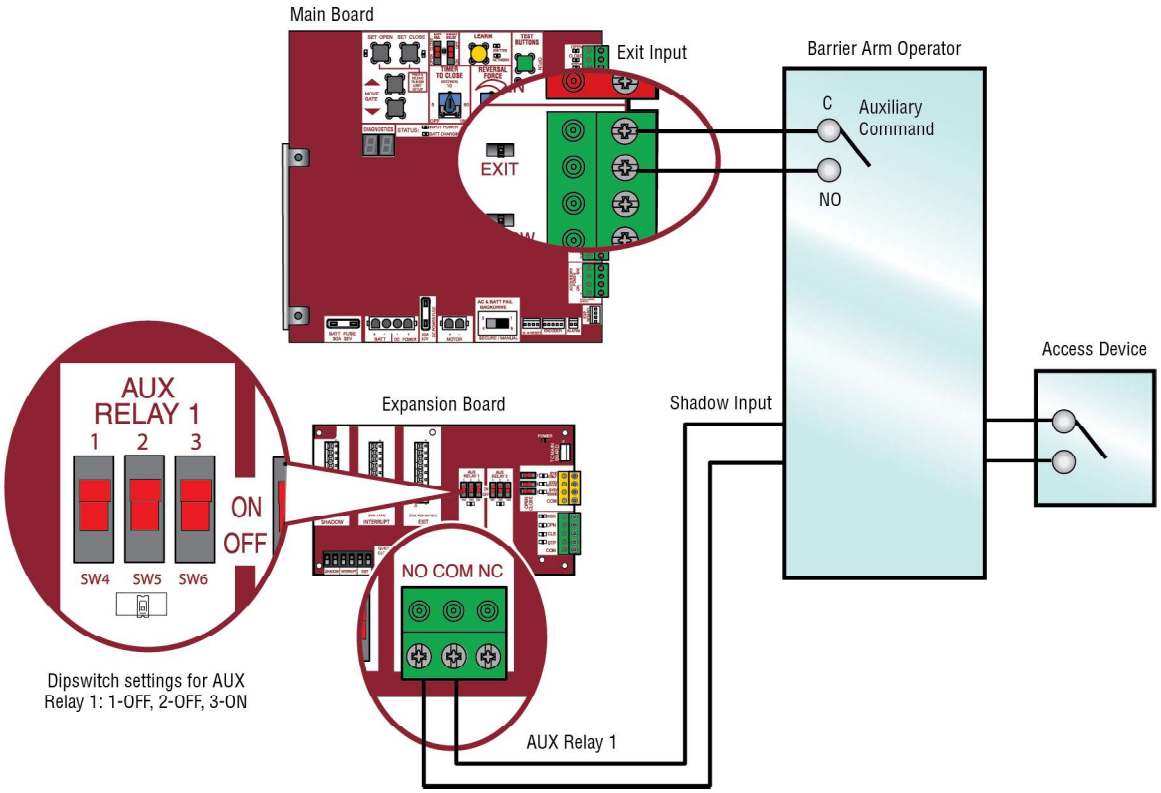

Dual Gate Settings

NOTE: *We recommend that all accessories and board configurations are set on the primary operator.*

Main control board

FEATURE	PRIMARY OPERATOR	SECONDARY OPERATOR
Timer-to-Close	Set the TTC dial to desired setting	OFF
Bi-Part Delay Switch	Bi-Part Delay: ON (will open last and close first) Tandem Mode: OFF Synchronized Close: ON	Bi-Part Delay: OFF (will open first and close last) Tandem Mode: OFF Synchronized Close: ON

Expansion board

FEATURE	PRIMARY OPERATOR	SECONDARY OPERATOR
QUICK CLOSE Switch	ON	OFF
ANTI-TAIL Switch	ON	OFF
LOW BATT Switch	Battery Fail OPEN: OPEN Battery Fail CLOSE: CLOSE	Battery Fail OPEN: OPEN Battery Fail CLOSE: CLOSE
AC FAIL OPEN/BATT Switch	OPEN	OPEN

Accessories

ACCESSORY	PRIMARY OPERATOR	SECONDARY OPERATOR
Remote Controls	Program remote controls 1 to 50 to the primary operator.	Program remote controls 51 to 100 to the secondary operator
LiftMaster Internet Gateway	Program to primary operator.	
Garage and Gate Monitor	Program to primary operator.	

Limit Setup with a Remote Control

To set the limits using a remote control, first you will need a 3-button remote control that has been programmed for OPEN, CLOSE, and STOP. Refer to the Programming section.

Initial Limits and Force Adjustment

For dual gate applications the limits will have to be set for each operator. The gate MUST be attached to the operator before setting the limits and force.

Ensure the gate is closed.

1. Press and release the SET OPEN and SET CLOSE buttons simultaneously to enter limit setting mode.
2. Press and hold the OPEN or CLOSE button on the remote control until the gate reaches the desired open position. The gate can be jogged back and forth using the OPEN and CLOSE buttons on the remote control.
3. Once the gate is in the desired open position, press and release the STOP button on the remote control.
4. Press and release the OPEN button on the remote control again to set the open limit.
5. Press and hold the CLOSE or OPEN button on the remote control until the gate reaches the desired close position. The gate can be jogged back and forth using the OPEN and CLOSE buttons on the remote control.
6. Once the gate is in the desired close position, press and release the STOP button on the remote control.
7. Press and release the CLOSE button on the remote control again to set the close limit.
8. Cycle the gate open and close. This automatically sets the force.

When limits are set properly the operator will automatically exit limit setting mode.

Refer to the *Adjustment* section and follow the instructions for *Fine Tune the Force* and *Obstruction Test*. Perform the "Obstruction Test" after every limit and force setting adjustment.

Adjust the limits

If the limits have already been set the operator will exit the limit setting mode after resetting each limit.

Set the Close Limit Only

1. Press and release the SET OPEN and SET CLOSE buttons simultaneously to enter limit setting mode.
2. Press and hold the CLOSE button on the remote control until the gate reaches the desired close position. The gate can be jogged back and forth using the OPEN and CLOSE buttons on the remote control.
3. Once the gate is in the desired close position, press and release the STOP button on the remote control.
4. Press and release the CLOSE button on the remote control again to set the close limit.

When the close limit is set properly the operator will automatically exit limit setting mode.

Set the Open Limit Only

1. Press and release the SET OPEN and SET CLOSE buttons simultaneously to enter limit setting mode.
2. Press and hold the OPEN button on the remote control until the gate reaches the desired open position. The gate can be jogged back and forth using the OPEN and CLOSE buttons on the remote control.
3. Once the gate is in the desired open position, press and release the STOP button on the remote control.
4. Press and release the OPEN button on the remote control again to set the open limit.

When the open limit is set properly the operator will automatically exit limit setting mode.

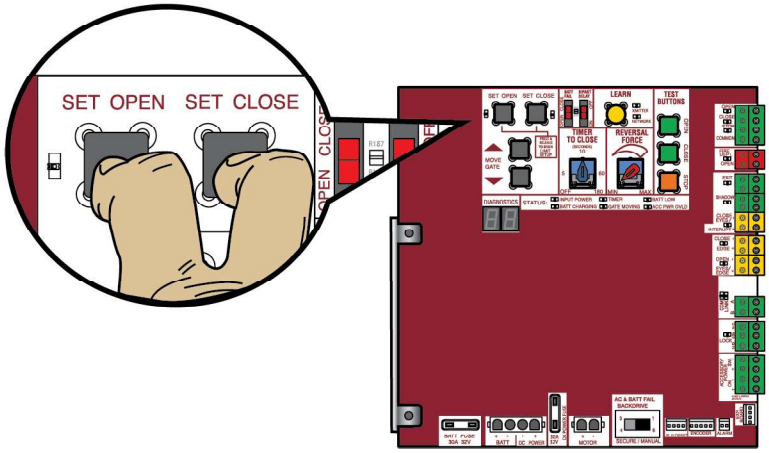

3-Button Remote Control programmed for OPEN, CLOSE, and STOP

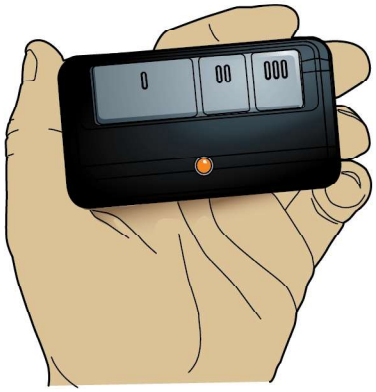

WIRING DIAGRAM

⚠ WARNING

To protect against fire and electrocution:

- DISCONNECT power (AC or solar and battery) BEFORE installing or servicing operator.

For continued protection against fire:

- Replace ONLY with fuse of same type and rating.

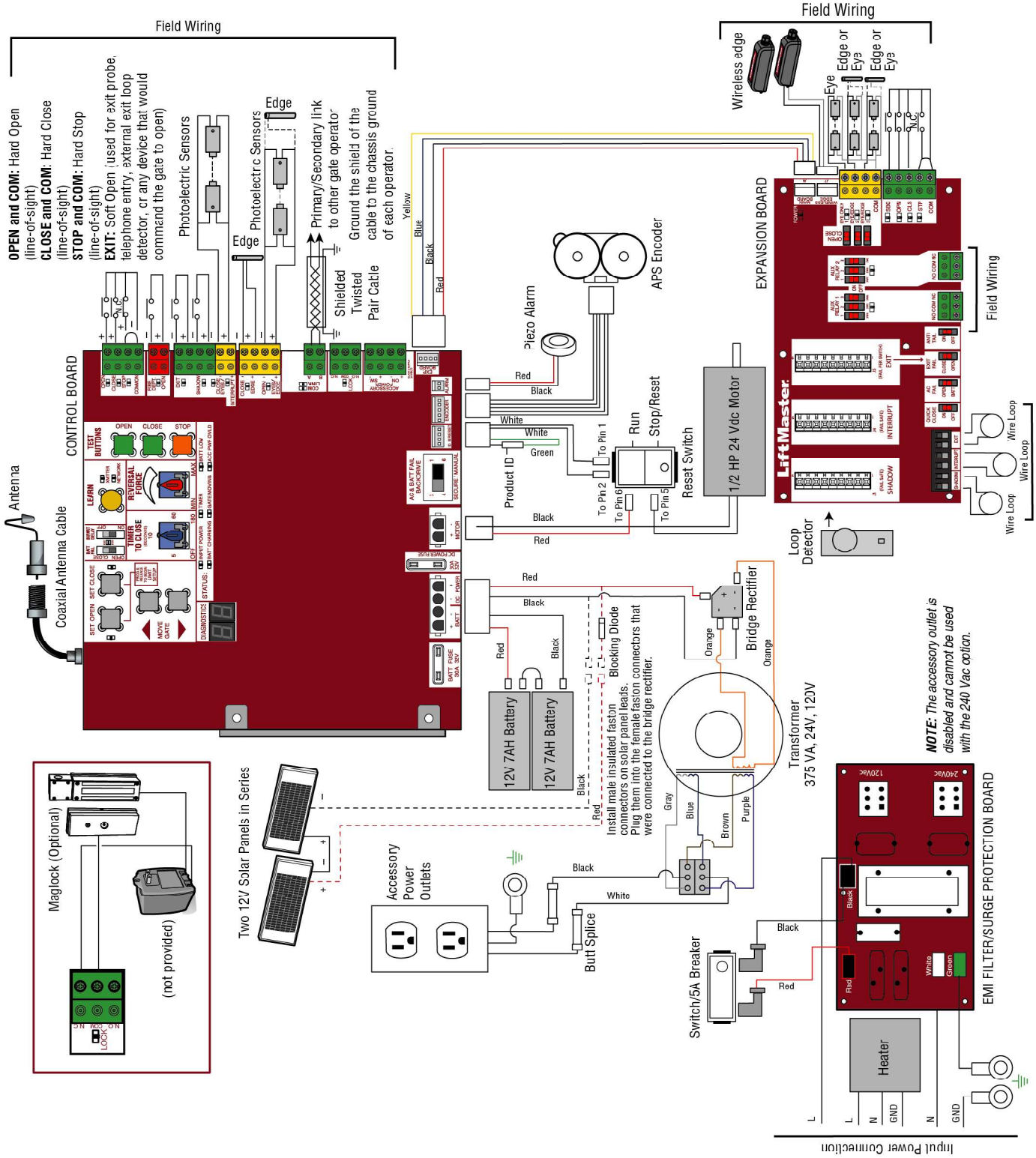

REPAIR PARTS

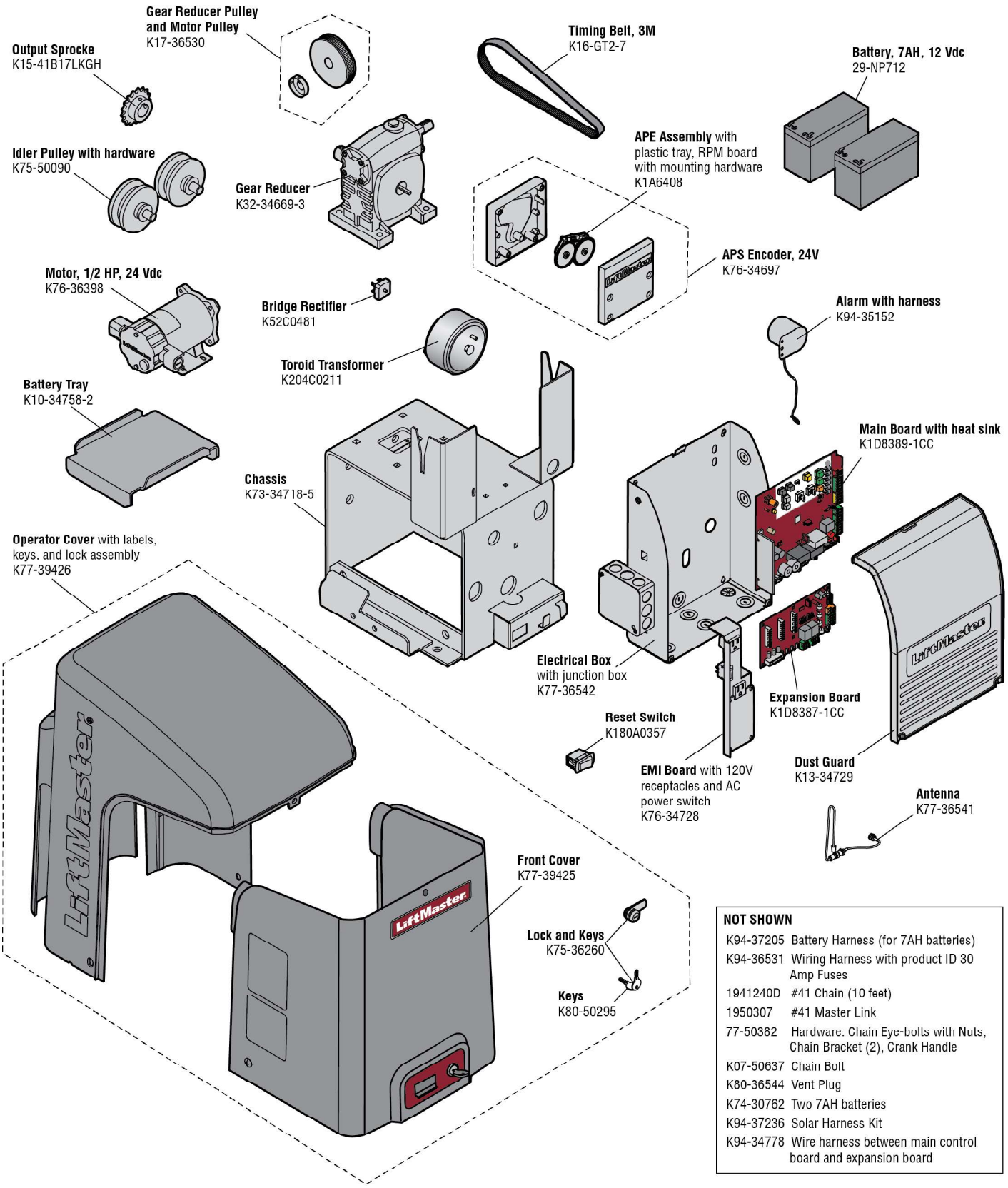

NOT SHOWN

K94-37205	Battery Harness (for 7AH batteries)
K94-36531	Wiring Harness with product ID 30 Amp Fuses
1941240D	#41 Chain (10 feet)
1950307	#41 Master Link
77-50382	Hardware: Chain Eye-bolts with Nuts, Chain Bracket (2), Crank Handle
K07-50637	Chain Bolt
K80-36544	Vent Plug
K74-30762	Two 7AH batteries
K94-37236	Solar Harness Kit
K94-34778	Wire harness between main control board and expansion board

ACCESSORIES

Entrapment Protection

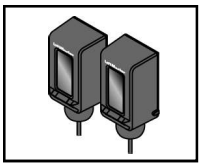

LiftMaster monitored through beam photoelectric sensor
Model LMTBUL

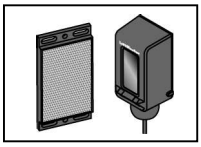

LiftMaster monitored retro-reflective photoelectric sensor
Model LMRRUL

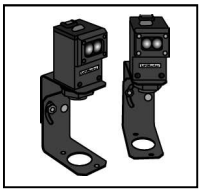

LiftMaster Monitered Commercial Protector System®
Models CPS-UN4 and CPSUN4G

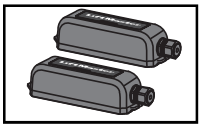

LiftMaster monitored wireless edge kit (transmitter and receiver)
Model LMWEKITU

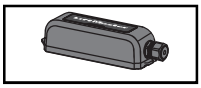

LiftMaster monitored wireless edge transmitter
Model LMWETXU

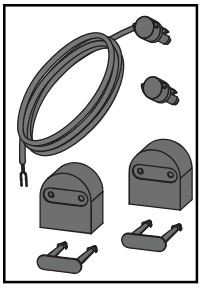

Large profile monitored edge (82 ft. roll)
Model L50
Large profile ends kit (10 pair)
Model L50E
Small profile monitored edge (82 ft. roll)
Model S50
Small profile ends kit (10 pair)
Model S50E

Plastic channel
8 ft. (2.4 m) for both small and large profile edges (pack of 10).
Model L50CHP
Aluminum channel
10 ft. (3.1 m) for both small and large edge profiles (pack of 8).
Model L50CHAL
LiftMaster large profile monitored edges (4ft.,5ft., 6ft.)
Model L504AL, L505AL, L506AL
Wraparound round monitored edge (4 ft., 5 ft., 6 ft.)
Models WR4, WR5, WR6
Wraparound square monitored edge (4 ft.,5 ft., 6 ft.)
Models WS4, WS5, WS6
Edge cutting tool
Model ETOOL

Remote Controls

LiftMaster offers a variety of LiftMaster remote controls to satisfy your application needs. Single-button to 4-button, visor or key chain. The following remote controls are compatible with operators manufactured by LiftMaster after 1993. Contact your authorized LiftMaster dealer for additional details and options.

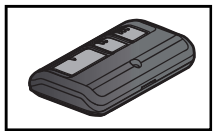

3-button remote control
The 3-button remote control can be programmed to control the operator. Includes visor clip.
Model 893MAX

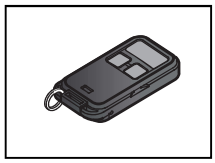

3-button mini-remote control
The 3-button remote control can be programmed to control the operator. Includes key ring and fastening strip.
Model 890MAX

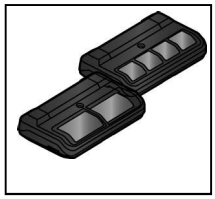

Security+ 2.0® learning remote controls
One button can control a gate operator and the other (s) can control garage door(s). It can also be programmed to Security+® or Security+ 2.0® code format.
Models 892LT and 894LT

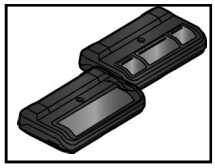

Universal single and 3-button remote controls
Ideal for applications requiring a large number of remote controls.
Models 811LM and 813LM

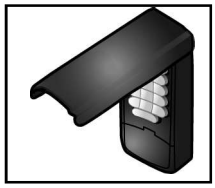

Keyless entry
Enables homeowner to operate gate operator from outside by entering a 4-digit code on a specially designed keypad.
Model 877MAX

Wireless commercial keypad
Durable wireless keypad with blue LED backlight metal keypad, zinc-alloy metal front cover and 5 year 9V lithium battery. Security+ 2.0® compatible.
Model KPW250

Commercial access control receiver
Access control receiver for up to 1,000 devices (any combination of remote controls and wireless keyless entries).
Model STAR1000

Miscellaneous

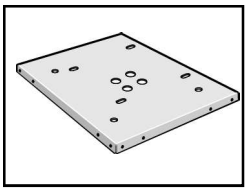

Post-mounting plate

For post-mounting models CSL24UL, CSW24UL CSW200UL and SL3000UL commercial gate operators. Posts not included.

Model MPEL

Remote antenna extension kit

The remote antenna extension kit allows the antenna to be remotely installed.

Model 86LM

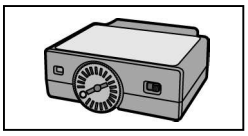

Plug-in loop detector

Low power. Conveniently plugs into existing control board.

Model LOOPDETLM

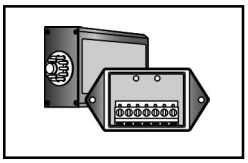

Loop Detector

Low power loop detectors mounted and wired separately inside control box. LiftMaster low power accessory.

Model LD7LP

Vehicle sensing probe

The vehicle sensing probe is buried in the ground and can detect a car as it approaches and will then open the gate.

Model CP3

Solar panel kit

This kit is to replace or add a solar panel to the operator application. 60W maximum for 24 Vdc operators and 30W maximum for 12 Vdc operators. Requires a 33AH battery harness.

Models SP10W12V (10 Watt, 12V) and SP20W12V (20 Watt, 12V)

Magnetic gate lock

Outdoor magnetic lock, transformer, junction box, mounting plate and hardware. Not for use with Solar Applications. Must be powered separately.

Model MG1300

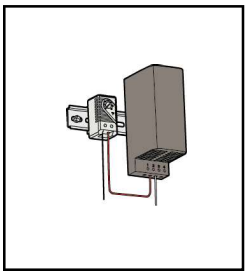

Heater

The heater keeps the gearbox and batteries at a suitable temperature when the outside temperature is below -4°F (-20°C). The thermostat MUST be set between 45°F and 60°F (7°C and 15.5°C) to ensure proper gate operation. The heater can be powered by 110 to 250 Vac.

Model HTR

LiftMaster® internet gateway

Internet enabled accessory which connects to the computer and allows you to monitor and control gate operators and lighting accessories enabled by MyQ® technology.

Model 828LM

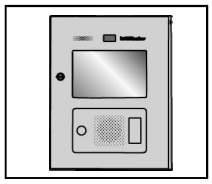

LiftMaster Cloud™ connected access protocol - high capacity

Model CAPXL

Warning sign

Model 40-39235

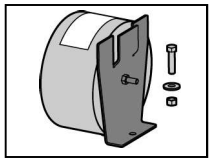

Transformer kit

Changes input voltage (208/240/480/575 Vac) to an output voltage of 120 Vac. Rated 208/240/480/575 Vac, 4.8/4.2/2.1/1.7 A, 60 Hz, 1 PH

Model 3PHCONV

Solenoid lock harness kit

Model K77-37972

Batteries

Gate access system batteries replace or upgrade the gate operator batteries. Two identical 12 Vdc batteries are required for each gate operator. Do not mix 7AH and 33AH batteries within a gate operator.

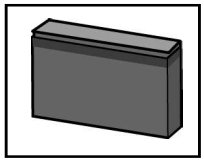

7AH batteries

Standard 7 AMP-Hour Battery, 12 Vdc, to replace original batteries provided with operator. Reuse existing harnesses.

Models 29-NP712 (1) and K74-30762 (2)

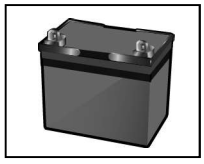

33AH batteries

Upgrade 33 AMP-Hour Battery, 12 Vdc. Ideal for solar applications and extended battery backup. Two required.

Model A12330SGLPK

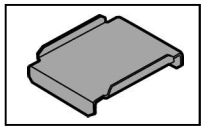

Battery tray

Two required for 33AH applications.

Model K10-34758-2

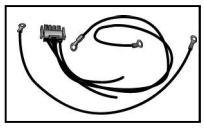

Universal solar wire harness kit

For 7AH and 33AH applications.

Model K94-37236

WARRANTY

LiftMaster 7 year residential / 5 year commercial Limited Warranty

LiftMaster ("Seller") warrants to the first purchaser of this product, for the structure in which this product is originally installed, that it is free from defect in materials and/or workmanship for a period of 7 year residential / 5 year commercial from the date of purchase [and that the CSL24UL is free from defect in materials and/or workmanship for a period of 7 year residential / 5 year commercial from the date of purchase]. The proper operation of this product is dependent on your compliance with the instructions regarding installation, operation, maintenance and testing. Failure to comply strictly with those instructions will void this limited warranty in its entirety.

If, during the limited warranty period, this product appears to contain a defect covered by this limited warranty, call **1-800-528-2806**, toll free, before dismantling this product. Then send this product, pre-paid and insured, to our service center for warranty repair. You will be advised of shipping instructions when you call. Please include a brief description of the problem and a dated proof-of-purchase receipt with any product returned for warranty repair. Products returned to Seller for warranty repair, which upon receipt by Seller are confirmed to be defective and covered by this limited warranty, will be repaired or replaced (at Seller's sole option) at no cost to you and returned pre-paid. Defective parts will be repaired or replaced with new or factory-rebuilt parts at Seller's sole option.

ALL IMPLIED WARRANTIES FOR THE PRODUCT, INCLUDING BUT NOT LIMITED TO ANY IMPLIED WARRANTIES OF MERCHANTABILITY AND FITNESS FOR A PARTICULAR PURPOSE, ARE LIMITED IN DURATION TO THE 7 YEAR RESIDENTIAL / 5 YEAR COMMERCIAL LIMITED WARRANTY PERIOD SET FORTH ABOVE [EXCEPT THE IMPLIED WARRANTIES WITH RESPECT TO THE CSL24UL, WHICH ARE LIMITED IN DURATION TO THE 7 YEAR RESIDENTIAL / 5 YEAR COMMERCIAL LIMITED WARRANTY PERIOD FOR THE CSL24UL, AND NO IMPLIED WARRANTIES WILL EXIST OR APPLY AFTER SUCH PERIOD. Some states do not allow limitations on how long an implied warranty lasts, so the above limitation may not apply to you. THIS LIMITED WARRANTY DOES NOT COVER NON-DEFECT DAMAGE, DAMAGE CAUSED BY IMPROPER INSTALLATION, OPERATION OR CARE (INCLUDING, BUT NOT LIMITED TO ABUSE, MISUSE, FAILURE TO PROVIDE REASONABLE AND NECESSARY MAINTENANCE, UNAUTHORIZED REPAIRS OR ANY ALTERATIONS TO THIS PRODUCT), LABOR CHARGES FOR REINSTALLING A REPAIRED OR REPLACED UNIT, OR REPLACEMENT OF BATTERIES.

THIS LIMITED WARRANTY DOES NOT COVER ANY PROBLEMS WITH, OR RELATING TO, THE GATE OR GATE HARDWARE, INCLUDING BUT NOT LIMITED TO THE GATE SPRINGS, GATE ROLLERS, GATE ALIGNMENT OR HINGES. THIS LIMITED WARRANTY ALSO DOES NOT COVER ANY PROBLEMS CAUSED BY INTERFERENCE. ANY SERVICE CALL THAT DETERMINES THE PROBLEM HAS BEEN CAUSED BY ANY OF THESE ITEMS COULD RESULT IN A FEE TO YOU.

UNDER NO CIRCUMSTANCES SHALL SELLER BE LIABLE FOR CONSEQUENTIAL, INCIDENTAL OR SPECIAL DAMAGES ARISING IN CONNECTION WITH USE, OR INABILITY TO USE, THIS PRODUCT. IN NO EVENT SHALL SELLER'S LIABILITY FOR BREACH OF WARRANTY, BREACH OF CONTRACT, NEGLIGENCE OR STRICT LIABILITY EXCEED THE COST OF THE PRODUCT COVERED HEREBY. NO PERSON IS AUTHORIZED TO ASSUME FOR US ANY OTHER LIABILITY IN CONNECTION WITH THE SALE OF THIS PRODUCT.

Some states do not allow the exclusion or limitation of consequential, incidental or special damages, so the above limitation or exclusion may not apply to you. This limited warranty gives you specific legal rights, and you may also have other rights which vary from state to state.

NOTES

300 Windsor Drive
Oak Brook, IL 60523
LiftMaster.com

© 2018, The Chamberlain Group, Inc. - All Rights Reserved

01-39381B

SUBCONTRACTOR WARRANTY FORM

PROJECT: Madera Industrial WHSE

LOCATION: S. Schnoor Ave Madera CA 93637

OWNER: Madera Industrial WHSE, LLC 401 W. Fallbrook Ave. #101 Fresno CA 93711

GENERAL CONTRACTOR: DBKO Design+Build LLC

We, LS Landcape, Subcontractor for Madera Industrial WHSE, do hereby warrant that all labor and materials furnished and work performed in conjunction with the above referenced project are in accordance with the Contract Documents and authorized modifications thereto, and will be free from defects due to defective materials or workmanship for a period of 1 year(s) from the Date of Substantial Completion.

Should any defect develop during the warranty period due to improper materials, workmanship or arrangement, the defect, including adjacent work displaced, shall be made good by the undersigned at no expense to the Owner.

The Owner will give Subcontractor written notice of defective work. Should Subcontractor fail to correct defective work within 60 days after receiving written notice, the Owner may, at his option, correct defects and charge Subcontractor costs for such correction. Subcontractor agrees to pay such charges upon demand.

FOR: LS Landscape Concepts	FOR:
BY:	BY:
TITLE: C/O	TITLE:
DATE: 04/24/2023	DATE:

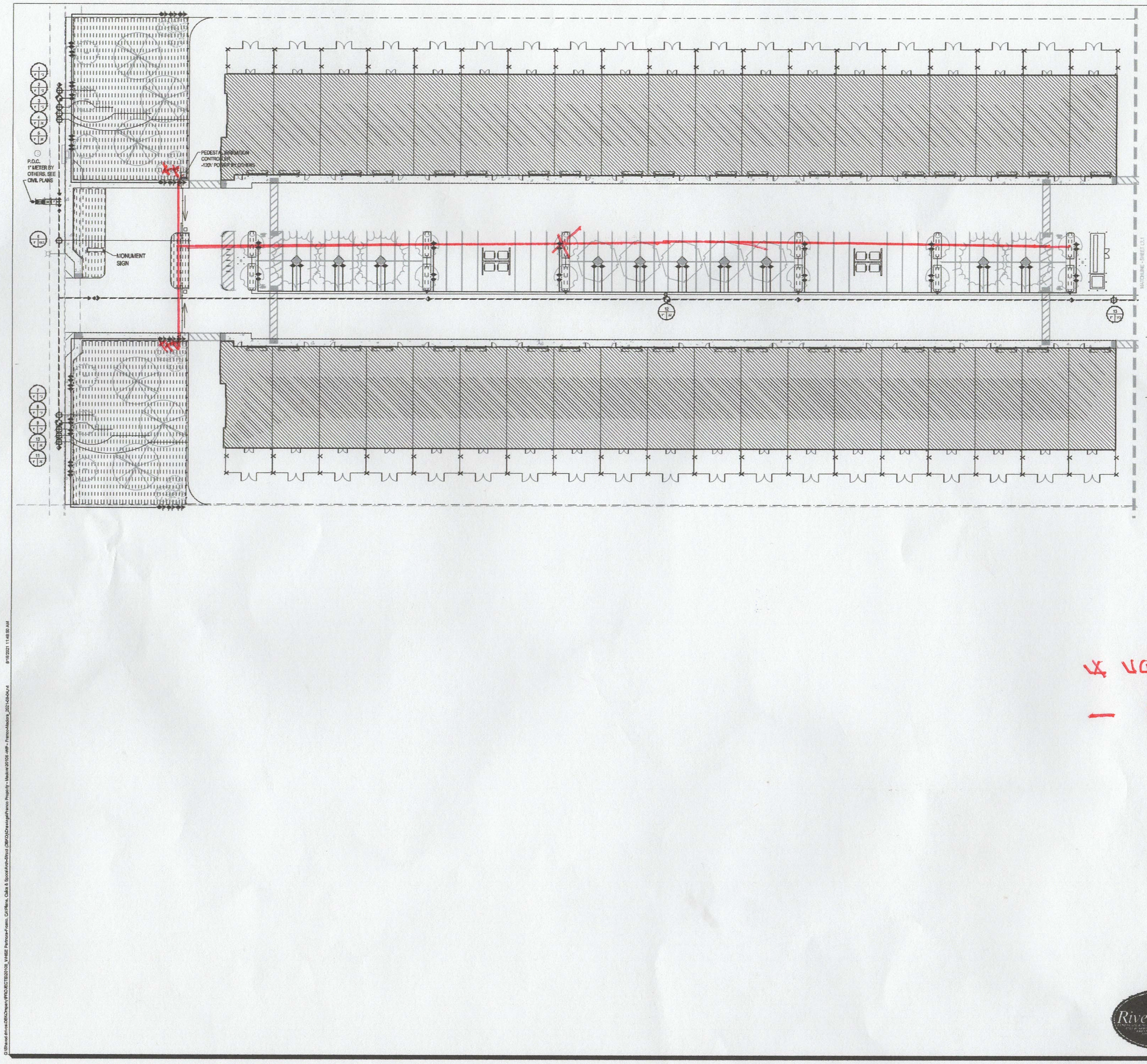

IRRIGATION LEGEND

SYM.	MFR.	DESCRIPTION	MODEL	RATE	NOTES
	WILKINS	REDUCED PRESSURE BACKFLOW PREVENTER	1", 825Y		
	HUNTER	3/4" QUICK COUPLER	HQ-33RC		
	MATCO	BRASS / BRONZE SHUTOFF	LINE SIZE		
C	HUNTER	I-CORE OUTDOOR PEDESTAL IRRIGATION CONTROLLER , 6 STA W/ SOLAR SYNC	IC600M W/ (2) ICM-400, ACC-PED & WSS-SEN		
F	HUNTER	1.5" FLOW SENSOR	HFS W/ FTC-150		
M	HUNTER	1.5" MASTER VALVE	ICV-151G		
	HUNTER	PGV REMOTE CONTROL IRRIGATION VALVE	0-20 GPM = 1" : PGV-101G 20 - 40 GPM = , 1.5": PGV-151G		
	HUNTER	DRIP ZONE REMOTE CONTROL IRRIGATION VALVE	1": ICV101G W/ HY-100		
	HUNTER	MULTISTREAN BUBBLER NOZZLE W/ 6" POP-UP W/ CHECK VALVE	MSBN-50Q/H PROS-06-CV	.50 GPM	
	HUNTER	HLD DRIPLINE	HLD-09-12, SPC @ 12"-24" O.C. BURY DRIPLINE 2" UNDER FINISH GRADE. LIGHTLY COMPACT TOP SOIL BEFORE INSTALLING TOP DRESS	0.9 GPH	
	HUNTER	DRIP AIR RELIEF VALVE			
	HUNTER	DRIP FLUSH VALVE			
		MAINLINE	SCH 40 PVC (2") MIN. UNLESS OTHERWISE NOTED		
		LATERALS	CL200 PVC (3/4") MIN. UNLESS OTHERWISE NOTED		
(NOT SHOWN)		SLEEVING	SCH 40 PVC , MIN SIZE 2X PIPE DIA		

X-X — CONTROLLER & VALVE ID
GALLONS PER MINUTE
VALVE SIZE

NOTES:

DESIGN STATIC PRESSURE AT POINT OF CONNECTION - 45 PSI
"IF UPON COMPLETION OF MAINLINE PSI TEST PSI IS BELOW 45 PSI CONTACT RIVERSIDE LANDSCAPE. DO NOT PROCEED WITH INSTALLATION OF IRRIGATION SYSTEM IF PRESSURE TEST DOES NOT YIELD THE MINIMUM REQUIREMENTS AS SPECIFIED ON THE PLANS.

PIPING IS SHOWN DIAGRAMMATICALLY FOR DRAWING CLARITY. PLACE ALL LATERALS 24" BEHIND ALL CURBS AND WALK.

ALL SPRAY HEADS TO BE PLACED MIN 24" FROM BACK OF CURB, SIDEWALK OR ANY NON-PERMEABLE SURFACE IN PUBLIC ACCESS AREAS.

X VALVES
— MAIN LINE

I HAVE COMPLIED WITH THE CRITERIA OF THE WATER EFFICIENT LANDSCAPE REQUIREMENTS ORDINANCE AND APPLIED THEM FOR THE EFFICIENT USE OF WATER IN THE IRRIGATION DESIGN AND PLANTING DESIGN PLAN

SIGNATURE LIC NO DATE

Riverside

SCALE: 1"=30'
30' 0 30'

NORTH

UNDERGROUND SERVICE ALERT of Northern California
Call: TOLL FREE
1-800-227-2600
TWO WORKING DAYS BEFORE YOU DIG

DBKO DESIGN - BUILD

WHSE PARTNERS

DATE	REVISION	BY

ANY INFORMATION OR DATA ON THIS DRAWING IS NOT INTENDED TO BE SUITABLE FOR REUSE BY ANY PERSON, FIRM, CORPORATION, OR ANY OTHER OR EXTENSIONS OF THIS PROJECT OR FOR ANY USE ON ANY OTHER PROJECT. ANY REUSE WITHOUT WRITTEN VERIFICATION AND ADAPTATION BY THE PARTY OF THE ORIGINAL PROJECT FOR THE SPECIFIC PURPOSE INTENDED WILL BE AT THE USER'S SOLE RISK AND WITHOUT LIABILITY OR LEGAL EXPOSURE TO THE ENGINEER.

SEAL

LICENSED LANDSCAPE ARCHITECT
4415
15-19-C-1001
STATE OF CALIFORNIA

IRRIGATION PLAN

LEASE FLEX. / WAREHOUSE BUILDINGS
FOR
MADERA INDUSTRIAL WHSE, LLC
S. SCHNOOR AVENUE, MADERA, CA

JOB NUMBER	21107
DESIGNED BY	MH
DRAWN BY	EZ
DATE	12/14/21
SHEET NUMBER	L2.0

I-CORE

Commercial Irrigation Controller

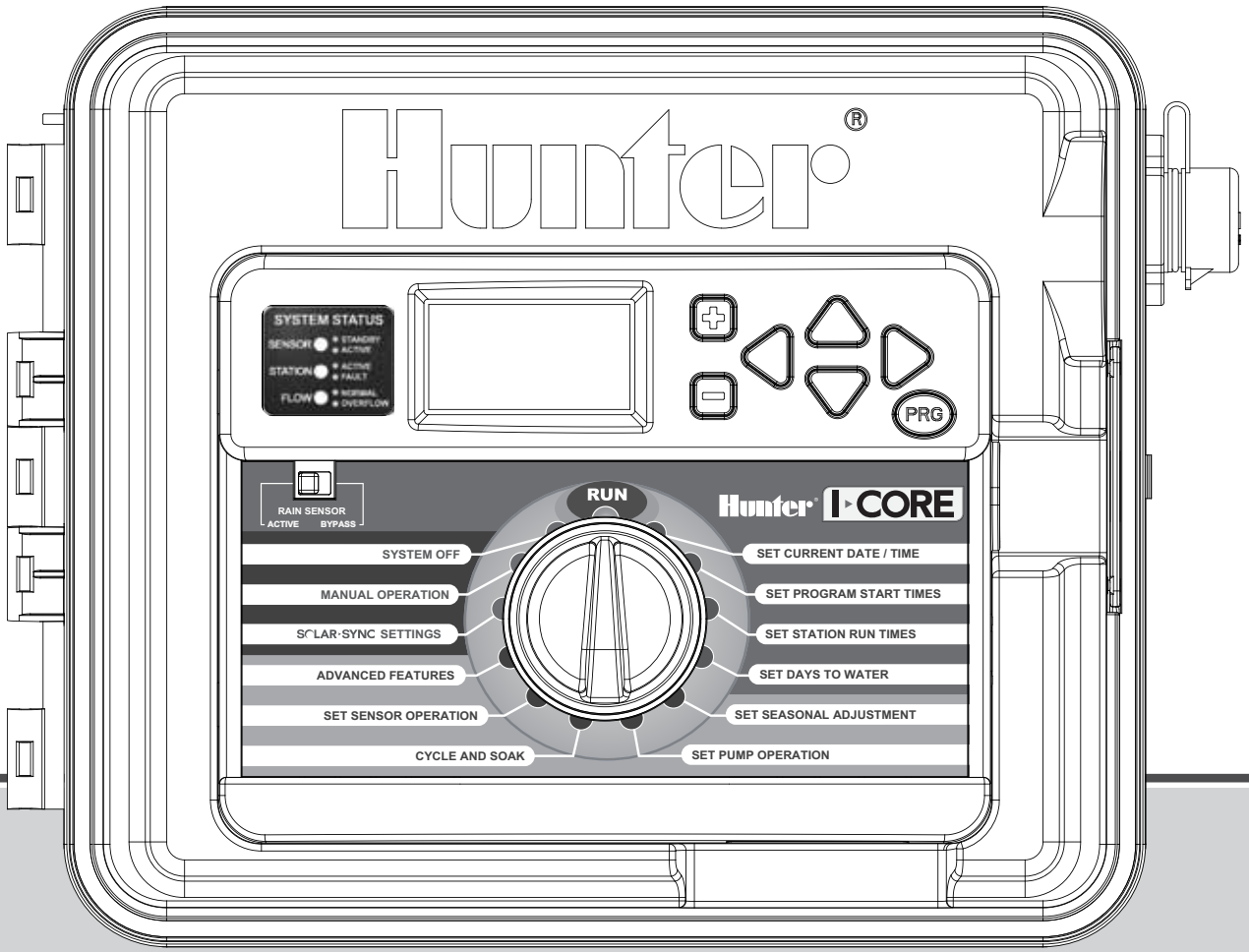

Owner's Manual and Installation Instructions

IC-600PL 6-station Controller expandable to 30 stations, Plastic Cabinet
IC-600M 6-station Controller expandable to 42 stations, Metal Cabinet
IC-600PP 6-station Controller expandable to 42 stations, Plastic Pedestal
IC-600SS 6-station Controller expandable to 42 stations, Stainless Steel

Hunter®

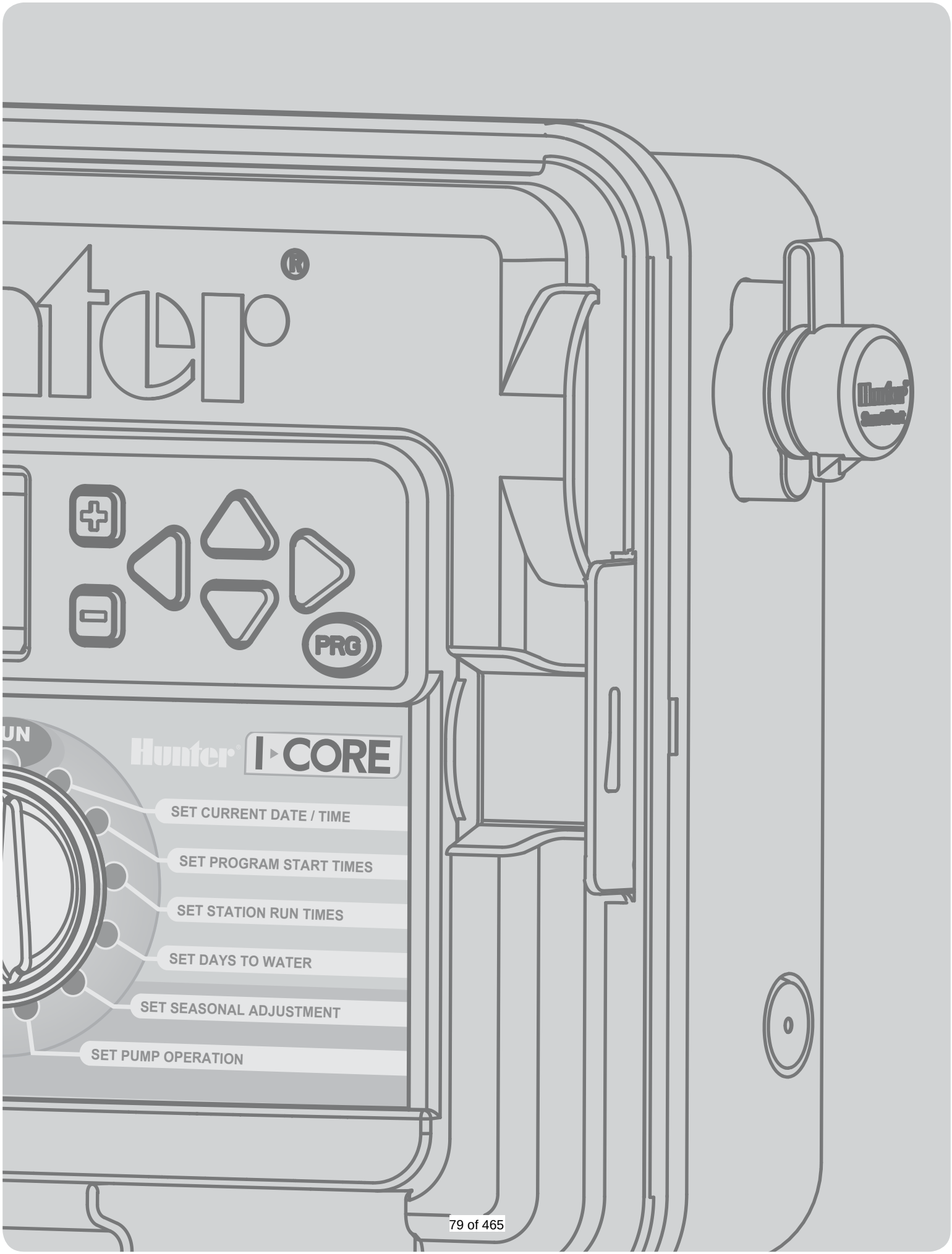
PRG
Hunter
I-CORE
SET CURRENT DATE / TIME
SET PROGRAM START TIMES
SET STATION RUN TIMES
SET DAYS TO WATER
SET SEASONAL ADJUSTMENT
SET PUMP OPERATION

TABLE OF CONTENTS

INTRODUCTION ... 2
I-CORE INTERFACE AND KEY COMPONENTS ... 2
I-CORE WIRING COMPARTMENT AND INTERIOR ... 3
MOUNTING THE CONTROLLER TO WALL ... 4
Wall Mount for Plastic and Metal Cabinet ... 4
MOUNTING THE CONTROLLER (METAL PEDESTAL) ... 5
Pedestal Mount for Metal/Stainless Cabinet ... 5
MOUNTING THE CONTROLLER (PLASTIC PEDESTAL) ... 5
Plastic Pedestal Mounting ... 5
CONNECTING AC POWER ... 6
For 120V Operation ... 6
For 230V Operation ... 6
CONNECTING EARTH GROUND ... 7
CONNECTING THE POWER AND STATION MODULES ... 8
Station Module Installation ... 8
Power Module Installation ... 8
CONNECTING VALVE WIRES ... 9
Connecting Station Valve Wires ... 9
Connecting a Master Valve or Pump Start Relay ... 9
CONNECTING A WEATHER SENSOR (OPTIONAL AND NOT INCLUDED) ... 10
Bypassing the Sensor(s) ... 10
Sensor Bypass Switch ... 10
CONNECTING A HUNTER SOLAR SYNC ... 11
CONNECTING A FLOW SENSOR (OPTIONAL) ... 12
CONNECTING A REMOTE CONTROL (OPTIONAL) ... 13
POWER FAILURES ... 14
QUICK START ... 14
CONTROLLER PROGRAMMING ... 15
Setting Current Date and Time ... 15
Setting Program Start Times ... 15
Setting Station Run Times (Length of Watering for Each Station) ... 15
Selecting Specific Days of the Week to Water ... 16
Selecting Odd or Even Days to Water ... 16
Selecting Interval Watering ... 16
Set Seasonal Adjustment ... 17
Set Pump Operation ... 18
Cycle and Soak ... 18
Set Sensor Operation ... 18
Manual Program ... 20
Manual Station ... 20
Learn Expected Flow ... 20
System Off ... 21
ADVANCED FEATURES ... 22
Set Language ... 22
Set Units ... 22
Sensor Configuration ... 22
Sensor Options ... 22
Configure a non-Hunter Flow Sensor ... 22
Flow Operation ... 23
Station Delay ... 24
No Water Window ... 24
Firmware Info ... 24
Easy Retrieve™ Memory ... 24
To save your watering program into memory: ... 25
To restore the saved program: ... 25
Total Watering Time ... 25
Erase All ... 25
LCD Adjust ... 26
Flow Totalizer ... 26
Solar Sync Delay ... 26
PROGRAMMING SOLAR SYNC SETTINGS ... 27
Programming Region & +/– Water Adjustment Setting ... 27
Clearing ET memory ... 28
Check Sensor ... 28
Programming Solar Sync Delay ... 28
HIDDEN FEATURES ... 29
Programmable Rain Off ... 29
One Touch Manual Start and Advance ... 29
Test Program Operation ... 29
Complete Flow Monitoring Procedure ... 29
CONTROLLER DIAGNOSTICS AND TROUBLESHOOTING ... 31
System Status Dashboard ... 31
Sensor Status ... 31
Station Status ... 31
Flow Status ... 31
HUNTER QUICK CHECK™ ... 33
TROUBLESHOOTING ... 34
I-CORE: INSTITUTIONAL/COMMERCIAL CONTROLLER (IC-600PL & IC601PL) – PLASTIC CABINET ... 36
I-CORE: INSTITUTIONAL/COMMERCIAL CONTROLLER (IC-800M & IC-800SS) – METAL CABINET ... 37
I-CORE PLASTIC PEDESTAL ... 38
SPECIFICATIONS ... 39
Operating Specifications ... 39
Electrical Specifications ... 39
Dimensions ... 39
Default Settings ... 39
FCC NOTICE ... 39

INTRODUCTION

The Hunter I-Core controller is a full-featured controller for demanding commercial and high-end residential applications. Versatility is what makes the I-Core one of Hunter's highest performing irrigation controllers.

I-Core features include:

- Modular design expandable from 6 to 30 stations (plastic cabinet) and 6 to 42 stations (metal/stainless cabinet)
- 4 fully independent programs
- Diagnostic Dashboard™ monitors system operation and provides real-time sensor and controller status
- Real-time flow monitoring
- Remote control ready with factory installed SmartPort®
- Seasonal adjustment independent by program: Can be set globally, monthly, or through Solar Sync
- Water Window Manager™: User defined hours when watering is allowed
- Easy Retrieve™ Memory: Saves preferred program in memory
- Large, backlit display for easy programming
- Multi-language programming capability
- Automatic short circuit protection
- Built in Solar Sync capability

Note:

- This product should not be used for anything other than what is described in this document.
- This product should only be serviced by trained and authorized personnel.
- This product is designed for continuous outdoor use from 0˚ F/-18 ˚ C to 140˚ F/60˚ C.
- These units have an IP44 rating.
- This controller is not intended for use by young children or infirm persons without supervision; young children should be supervised to ensure that they do not play with the appliance.

I-CORE INTERFACE AND KEY COMPONENTS

1. **LCD Display** – Backlit, adjustable contrast display
2. **+ Button** – Increases flashing value depending on function
3. **– Button** – Decreases flashing value depending on function
4. ▲ ▼ (Up and Down Arrow Buttons) – Used to move up and down through adjustable functions in various screens, and change selections in certain screens
5. ◄ ► (Left and Right Arrow Buttons) – Used to move left and right in various screens, and change important selections such as Stations, Start Times, and Water Days
6. **PRG** (Program Button) – Selects one of the automatic Programs (A–D), and also starts the test program
7. **Programming Dial** – Used to access all of the programming functions of the I-Core. The most basic automatic watering is set up in the first 4 dial positions
8. **Rain Sensor Bypass Switch** – Allows user to bypass weather sensor if one is installed
9. **System Status Dashboard** – LED lights provide system status information regarding sensor status, valve operation, and flow monitoring
10. **Removable Facepack** – I-Core facepack can be removed from controller for remote programming

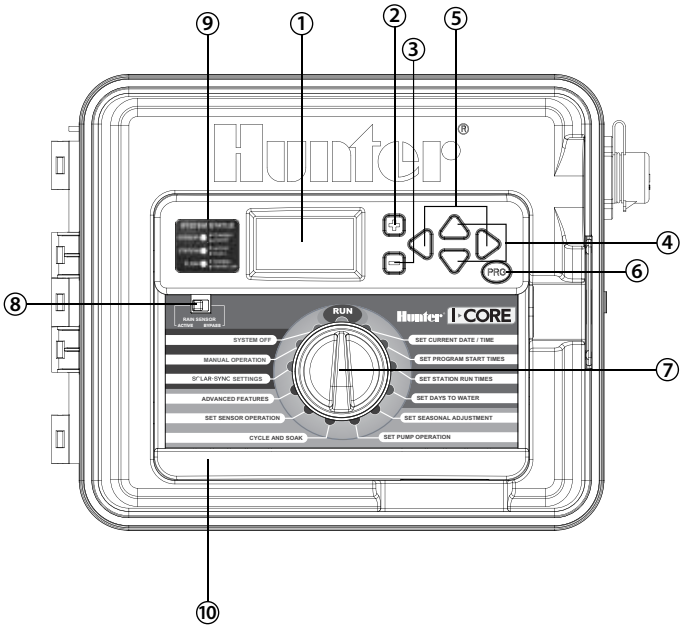

I-CORE WIRING COMPARTMENT AND INTERIOR

1. **Battery Compartment** (9-volt alkaline battery) – The alkaline battery (not included) keeps time during power outages. The user may also program the controller without AC power.
2. **Battery Compartment** (CR2032 3-volt lithium) – The lithium battery provides backup timekeeping during power outages and when the 9-volt is not installed (location is on the back of the facepack).
3. **Release for Facepack** – Pull on the release tab and the facepack can be removed from the facepack frame.
4. **Ribbon Cable** – Cable that transmits information between the facepack and the inner controller assembly.
5. **Slide Lock Bar for Output Modules** – Sliding the Slide Lock Bar turns the controller's power on or off. Permits the addition or removal of output modules and locks the modules into place in the Power On position.
6. **Power Module** – This module provides power to the controller. This module must be in place for the controller to operate.
7. **Station Module(s)** – The addition of 6 station modules allows the ability to expand your I-Core from 6 to 30 stations (plastic cabinet) and 6 to 42 stations (metal cabinet and plastic pedestal). Each station module corresponds to six station screw terminals.
8. **Power and Accessory Terminals** – Connections for Power, Sensors, Pump/Master Valve, and other accessory connections.
9. **Station Terminals** – Connections for station wires; only terminals with corresponding Station Output Modules will be active and recognized by the controller.
10. **Communication Port** – Connection for future use with Central Control Communications.
11. **Earth Ground Lug** – For connection of earth ground copper wire (for surge protection only). Do not connect valve commons or the incoming service ground wire.
12. **Transformer** – A transformer is installed in the controller to supply 24VAC power to the controller. Transformer allows for either 120VAC or 230VAC connections.
13. **AC Wiring Compartment** (Junction Box) – For connection of 120/230VAC power.
14. **Conduit Opening** – 1 to 1 ½" (25 mm to 38 mm) for field wiring into controller.
15. **SmartPort®** – Integrated connector for ICR/SRR/ROAM receiver (on side of cabinet).

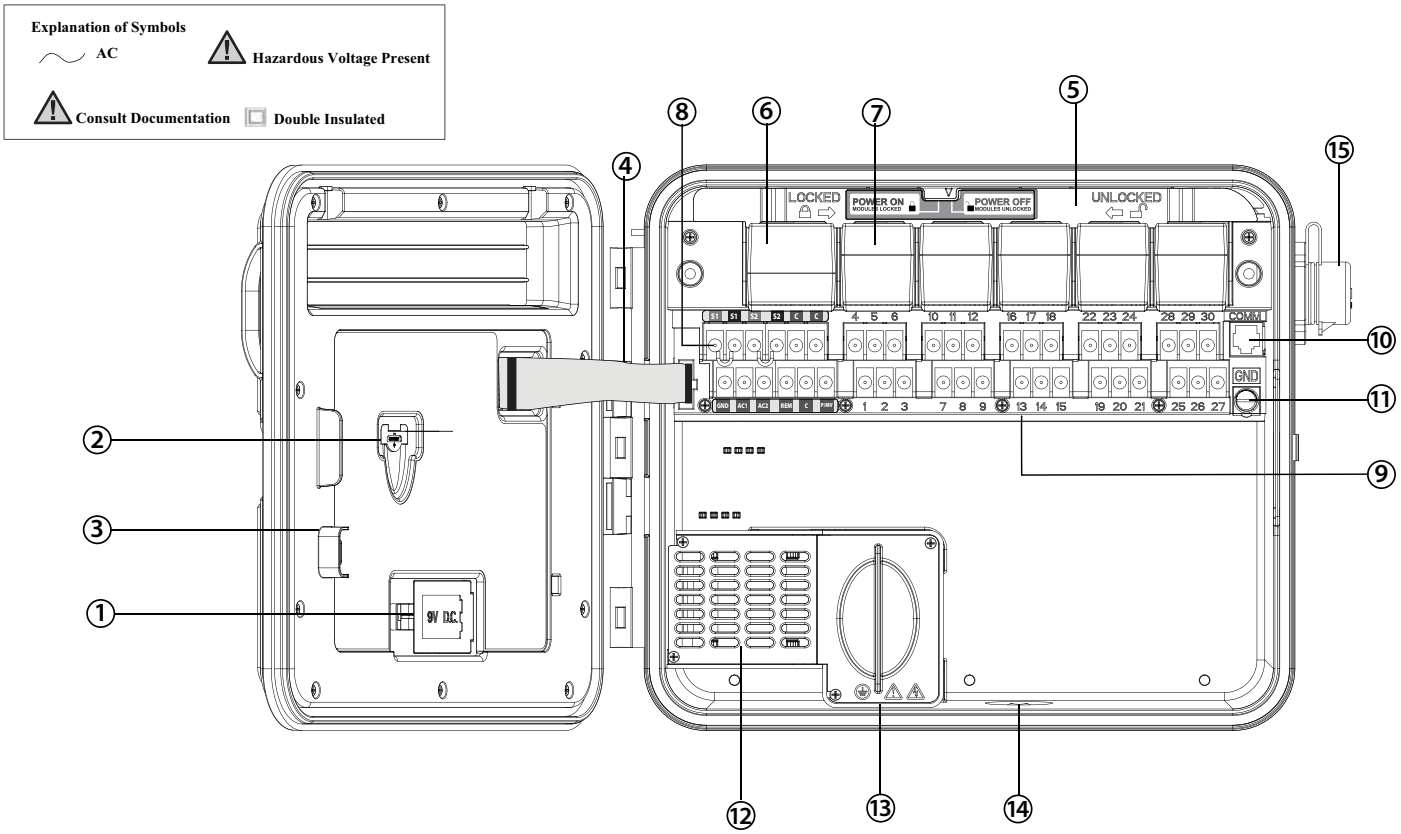

MOUNTING THE CONTROLLER TO WALL

Wall Mount for Plastic and Metal Cabinet

All necessary mounting hardware is included with your controller and should be suitable for most installations.

Tools required:

- Long drill bit and extension Philips screwdriver or bit (for use with long extension) – magnetic recommended Wire strippers

NOTE: This controller must be installed in compliance with local electrical codes.

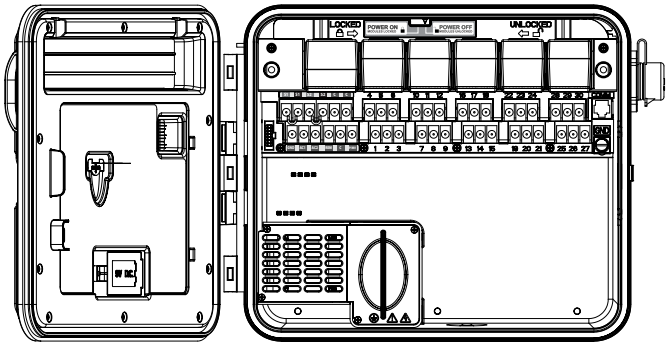

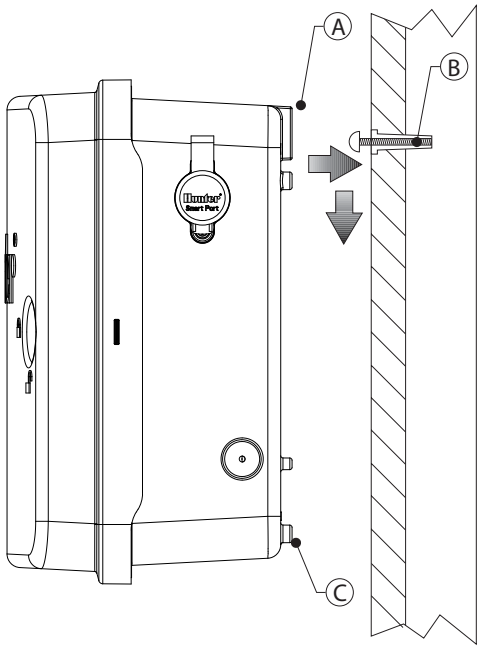

Location Requirement: A) A switch or circuit-breaker shall be included in building installations; B) the switch or breaker shall be in close proximity to the controller and within easy reach of the operator; C) the switch or breaker shall be marked as the disconnecting device for the controller; D) the switch or circuit breaker used must comply with IEC 60947-1 and IEC 60947-3.

Select a location for your controller that can be easily accessible, has a flat wall surface, and is within close proximity to a 120VAC(10A) or 230/240VAC(5A) power source.

In outdoor installations, avoid direct exposure to sprinkler spray. Shaded or partially shaded areas are preferable to prolonged direct sunlight.

1. Using the enclosed mounting template, mark the mounting hole locations on the wall. It should be mounted at eye level if possible.
2. Drill a ¼" (6 mm) hole at each mark.
3. Install screw anchors into holes if attaching the controller to drywall, masonry, or plaster walls.
4. Open the controller and inner door. The inner door will swing out of the way to provide full access to the controller mounting holes.
5. Holding the controller cabinet, line up the holes in the cabinet with the wall anchors or pilot holes.
6. Drive a screw through each hole and secure snugly but do not over tighten.
7. **OPTIONAL:** Locate the positioning hanger in the upper center of the controller (A). Install one screw (B) in this hanger position and hang the controller from the keyhole slot. Place a level on the top of the controller cabinet and level. Locate and drive a screw in each of the remaining screw holes (C), and secure snuggly but do not over tighten the screws.

MOUNTING THE CONTROLLER (METAL PEDESTAL)

Pedestal Mount for Metal/Stainless Cabinet

Location Requirement: A) A switch or circuit-breaker shall be included in building installations; B) the switch or breaker shall be in close proximity to the controller, and within easy reach of the operator; C) the switch or breaker shall be marked as the disconnecting device for the controller; D) the switch or circuit breaker used must comply with IEC 60947-1 and IEC 60947-3.

Select a location for your controller that can be easily accessible, and is within close proximity to a 120VAC(10A) or 230/240VAC(5A) power source.

1. Set concrete forms using the installation instructions provided with the controller. Allow 2"(50 mm) of the conduit sweep above the surface of the concrete pad.
2. Assemble the mounting template. Twist one nut on each of the four J-bolts and slide each bolt through the template. Put a washer and nut on each J-bolt to secure it to the template (allow 2 ½" [64 mm] of thread protruding above each nut).
3. Level the mounting template before the concrete sets. Uneven surfaces may cause the pedestal to distort, preventing proper sealing of the doors.
4. Allow the concrete to cure for at least 24 hours. After the concrete sets, remove the nuts and washers from the four J-bolts, and slide the pedestal over the bolts. Secure the pedestal to the bolts using the enclosed washers and nuts.

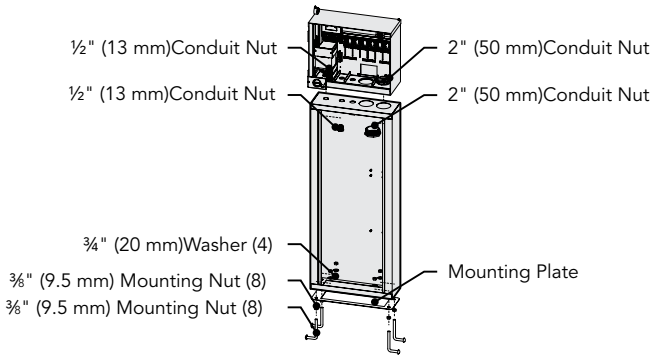

5. Remove the door and faceplate of the I-Core and attach the metal cabinet of the I-Core to the top of the pedestal using the enclosed hardware in the pedestal.
6. Replace the pedestal door first and then replace the faceplate and the cabinet door. The pedestal door cannot be removed or replaced when the cabinet door is closed.

MOUNTING THE CONTROLLER (PLASTIC PEDESTAL)

Plastic Pedestal Mounting

Location Requirement: A) A switch or circuit-breaker shall be included in building installations; B) the switch or breaker shall be in close proximity to the controller, and within easy reach of the operator; C) the switch or breaker shall be marked as the disconnecting device for the controller; D) the switch or circuit breaker used must comply with IEC 60947-1 and IEC 60947-3.

Select a location for your controller that can be easily accessible, and is within close proximity to a 120VAC(10A) or 230/240VAC(5A) power source.

1. Set concrete forms using the installation instructions provided with the controller. Allow 2"(50 mm) of the conduit sweep above the surface of the concrete pad.
2. Assemble the mounting template. Twist one nut on each of the four J-bolts and slide each bolt through the template. Put a washer and nut on each J-bolt to secure it to the template (allow 2 ½" [64 mm] of thread protruding above each nut).
3. Level the mounting template before the concrete sets. It is important with plastic pedestals to ensure a smooth mounting surface. Uneven surfaces may cause the pedestal to distort, preventing proper sealing of the doors.
4. Allow the concrete to cure for at least 24 hours. After the concrete sets, remove the nuts and washers from the four J-bolts, and slide the pedestal over the bolts. Secure the pedestal to the bolts using the enclosed washers and nuts.

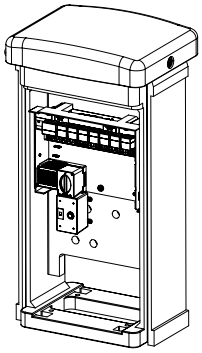

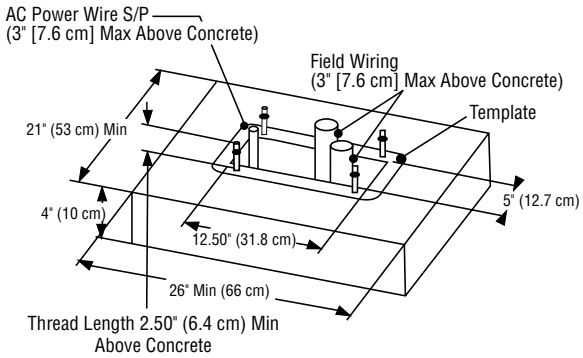

CONNECTING AC POWER

NOTE: It is recommended that a licensed electrician perform the following power installation.

The I-Core can operate with either 120VAC or 230VAC power. Supply wires must be 14AWG or larger.

1. Turn AC power off at the source, and verify that it is off.
2. Remove the cover from the junction box.
3. Strip approximately ½" (13 mm) of insulation from the end of each of the AC power wires.
4. Route the wires through the conduit opening inside the junction box.

Do NOT connect the primary AC 120/230V electrical ground wire to the earth ground lug.

For 120V Operation

1. Connect the incoming black power wire (HOT) with the black wire lead from the transformer.
2. Connect the incoming white wire (NEUTRAL) with the blue lead from the transformer.
3. Connect the incoming green wire (GROUND) with the green and yellow wire from the transformer.
4. Cap the unused brown wire coming from the transformer. Replace cover of the junction box and screw into place.

For 230V Operation

1. Connect the incoming brown power wire (HOT) with the brown wire lead from the transformer.
2. Connect the incoming blue wire (NEUTRAL) with the blue lead from the transformer.
3. Connect the incoming green wire (GROUND) with the green and yellow wire from the transformer.
4. Cap the unused black wire coming from the transformer. Replace cover of the junction box and screw into place.

Junction Box without Terminal Strip (120 Volt)

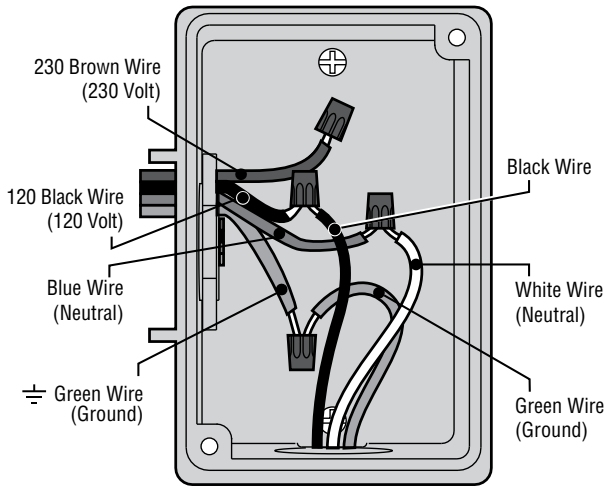

Junction Box with Terminal Strip (230 Volt)

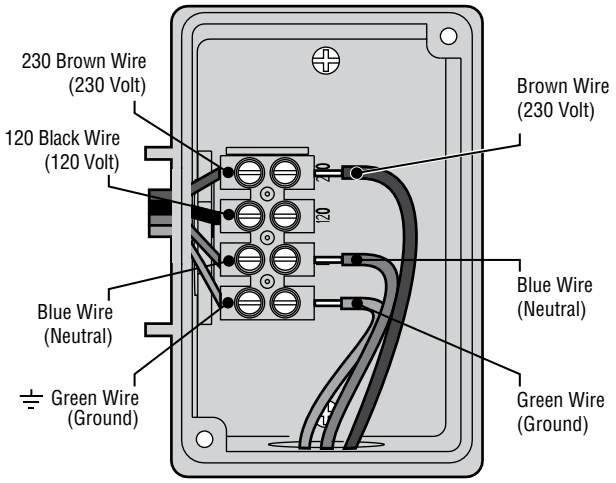

CONNECTING EARTH GROUND

The I-Core features a ground lug, which is isolated from the primary AC power, and is used to ground incoming surges from the communications and output valve wires.

Do NOT connect the primary AC 120/230V electrical ground wire to the earth ground lug.

1. Use #10 (6 mm) or #8 (10 mm) bare wire to connect the controller to the ground rod. Route the earth ground wire into the wiring compartment through the 1 ½" conduit opening at the bottom of the cabinet. Do not route the ground wire through the same conduit as the incoming primary AC power.
2. Loosen the ground lug screw; insert the ground wire into the ground lug and tighten the screw to secure the ground wire. Do not over tighten.

Acceptable grounding consists of an 8' (2.5 m) copper-clad rod or stake, or a 4" x 96" (100 mm x 240 cm) copper plate, or both, placed in the earth at least 8' (2.5m) away from the controller, and with the ground wire at right angles to the communications and valve wires, if possible. Ideal grounding resistance would be 10 Ohms or less as measured with a "megger" or similar device. Please consult the ASIC reference for more detailed information on proper grounding techniques.

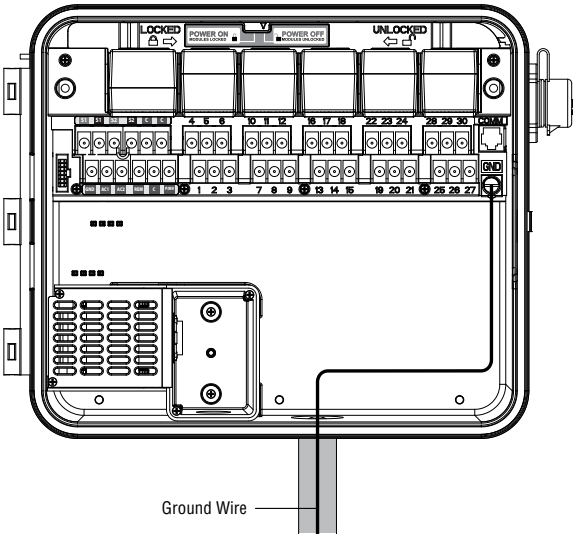

CONNECTING THE POWER AND STATION MODULES

The I-Core controller is supplied with one factory installed power module and one station module for six stations. Additional station modules may be added in six station increments to expand the controller's station capability. The plastic cabinet I-Core can be expanded to a size of 30 stations, and the metal cabinet and plastic pedestal I-Core can expand to 42 stations.

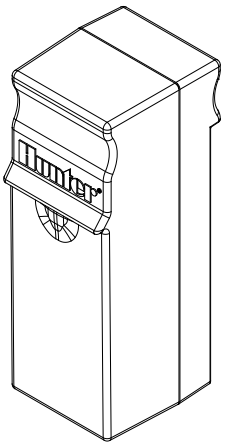

STATION MODULE

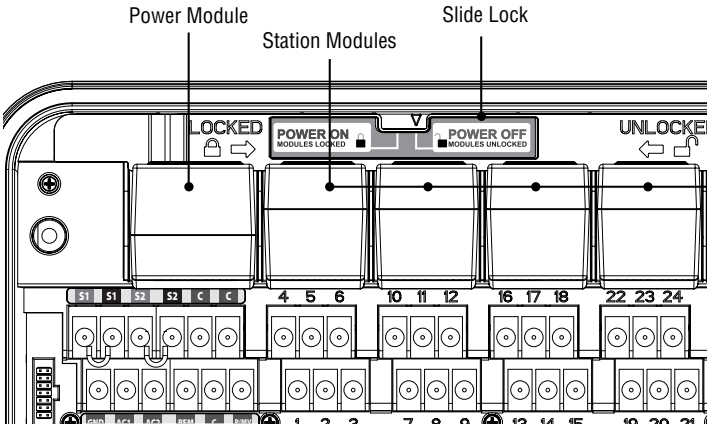

Station Module Installation

1. Open the inner facepack door and locate the Slide Lock. Move the Slide Lock bar to the **POWER OFF** position.
2. The module needs to be inserted into the first open module slot position from the left or next available position in the back of the controller. Do not skip slots by leaving them empty.
3. Insert the module with the gold tab on the top of the module facing up. Slide the module straight in until it clicks into place.
4. Slide the Slide Lock into the **POWER ON** position.
5. The controller will automatically identify any new modules that have been added. You can turn the dial to **SET STATION RUN TIMES** to confirm the correct number of stations have been acknowledged.

Power Module Installation

The I-Core power module supplies power to the facepack and accessory terminals. It typically does not need to be removed, however can be replaced for servicing.

1. To install the Power Module, open the inner facepack door, and locate the module lock bar. Move the Slide Lock bar to the **POWER OFF** position.
2. Insert the power module into the first slot position from the left, with the gold tab on the top of the module facing up. Slide the module straight in until it clicks into place.
3. Move the Slide Lock to the **POWER ON** position.
4. The Power Module must be in place in order for the controller to operate and function.

CONNECTING VALVE WIRES

Connecting Station Valve Wires

Each station module that has been inserted has a grouping of six station screw terminals corresponding to that particular expansion slot. Once a station module is installed in a module slot, the station screw terminals assigned to that module, which are located directly below the station module, become active.

Each station output is rated for 0.56A max, or enough to operate two Hunter AC solenoids simultaneously.

1. Route valve wires between control valve location and the controller.
2. At the valves, attach a common wire to either solenoid wire of all the valves. This is most commonly a white colored wire. Attach a separate control wire to the remaining wire of each valve. All valve wire splice connections should be done using waterproof connectors.
3. Open the faceplate at the controller to expose the numbered station terminals.
4. Route valve wires through the conduit and attach the conduit to the controller at the 1 ½" (37.5 mm) opening at the bottom of the cabinet.
5. Strip ½" (13 mm) of insulation from the ends of all the wires. Secure the valve common wire to one of three C (Common) terminals located of the Power and Accessory terminals. All three common terminals are active, so the valve common wire may be connected to either one. Attach all the individual valve control wires to the appropriate station terminals.

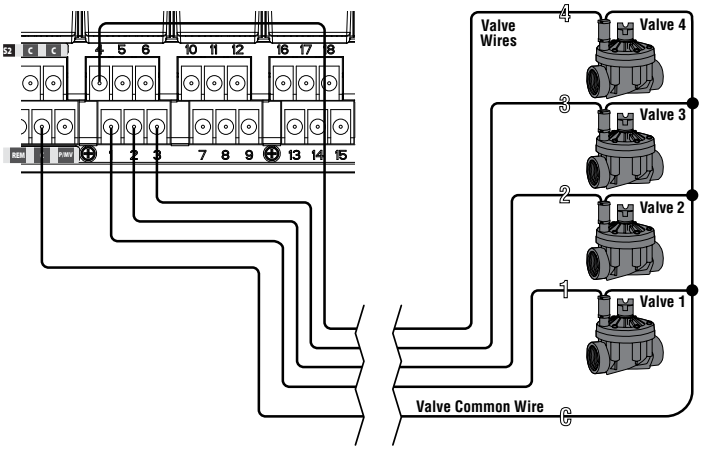

Connecting a Master Valve or Pump Start Relay

Complete this section only if you have a Master Valve or Pump Start Relay installed. The I-Core controller works with a normally closed master valve that is typically installed at the supply point of the main line that opens only when the automatic system is activated. A pump start relay is an electrical device that uses the irrigation controller to activate a pump to provide water to your system.

The Master Valve or Pump Start Relay connection is located on the bottom row of the Power and Accessory Terminals, and is labeled P/MV. This terminal will supply 24 VAC, 0.32A max, for a single Master Valve solenoid. For a Pump Start Relay, the relay holding current draw must not exceed 0.28 amps. If using a Pump Start Relay, it is recommended that the controller be mounted at least 15' (4.5 m) away from both the pump start relay and the pump. When a pump is to be operated by the controller, a pump start relay must be used. Do not connect the controller directly to the pump — damage to controller will result.

1. Route valve wires between Master Valve or Pump Start Relay location and the controller.
2. At the Master Valve, attach a common wire to either solenoid wire of the valve. Attach a separate control wire to the remaining solenoid wire. At the Pump Start Relay, attach either wire to one of the yellow wires coming from the Pump Start Relay. Attach the remaining wire to the other yellow wire at the Relay. All wire splice connections should be done using waterproof connectors.
3. Open the inner facepack door at the controller.
4. Route the valve wires into the controller via the field wire conduit.
5. Connect either wire from the Master Valve or Pump start Relay to the P/MV terminal located on the bottom row of the Power and Accessory terminals. Connect the remaining wire to the C (Common) terminal that is located directly to the left of the P/MV terminal.

The Master Valve or Pump Start Relay can be activated according to a particular station. The configuration of assigning the Master Valve or Pump Start Relay according to a particular station will be covered in the Set Pump Operation (pg. 18).

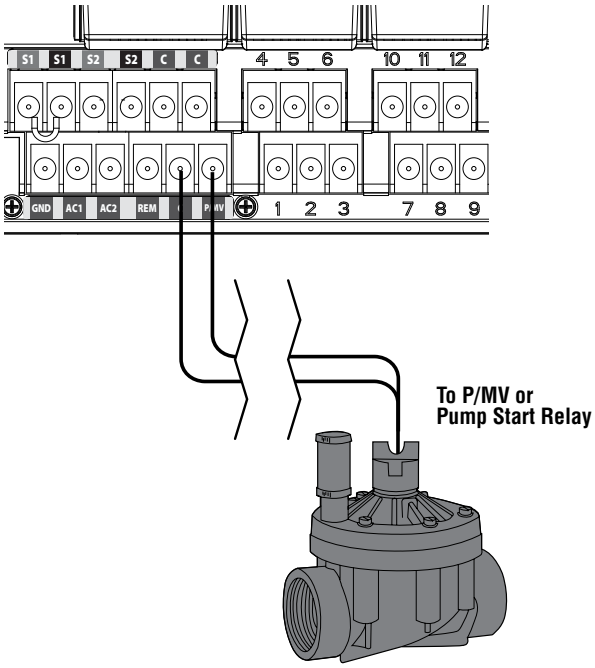

CONNECTING A WEATHER SENSOR (OPTIONAL AND NOT INCLUDED)

The I-Core controller has the ability of connecting two Hunter Sensors (three with I-Core Metal) including:

- Mini-Clik®
- Rain Clik™
  (including Wireless Rain Clik, Wireless Rain Freeze-Clik)
- Freeze-Clik®
- Wind-Clik®
- Mini-Weather Station (MWS)
- Solar Sync and Wireless Solar Sync ET Sensor

With the I-Core controller, Clik sensors can be programmed to shut down individual stations, not necessarily the entire controller. Each sensor can be given its own response instructions according to each station. Hunter Clik sensors are usually normally closed, and open on alarm. This signals the controller to suspend watering when precipitation, freeze or wind events occur. The sensor connects directly to the sensor terminals, which also allows you to override the sensor by using the Rain Sensor bypass switch on the face of the controller.

1. To connect Clik sensors, locate the 2 pairs of sensor terminals in the Power and Accessory Terminal section, labeled S1, S1 and S2, S2 (S3 available on I-Core Metal).
2. Route the wires from the Clik sensor through any of the available knockouts into the controller cabinet.
3. The sensor connections are made in dedicated pairs. Remove the sensor jumper wire from one pair of S1 or S2 terminals. Attach one sensor wire to each of the two S1 or S2 terminals.
4. To connect the Wireless Rain Clik or Wireless Rain Freeze Clik, the blue and white wires will be connected to the corresponding sensor terminal as stated above: One into the first S1 terminal and the other into the second S1 terminal. Connect one of the yellow wires to the AC1 terminal and the other yellow wire to the AC2 terminal.

Bypassing the Sensor(s)

If the rain sensor is ACTIVE and automatic or manual operation is required, simply move the Bypass switch to Bypass.

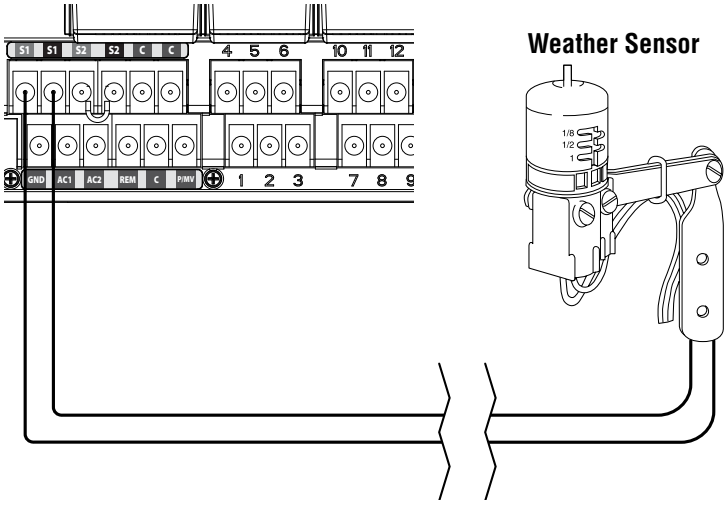

If the rain sensor switch is left in the ACTIVE position but no sensor is connected and the jumper wire has been removed, the display on the I-Core will indicate that the sensor is ACTIVE. This will also be indicated in the System Status dashboard to the left of the display. The sensor light will be illuminated RED for ACTIVE, thus having an open circuit. As long as the sensor is in the ACTIVE mode, any station that has been programmed to the ACTIVE sensor will not be allowed to water, and will be put into Suspend mode. If you do not have a sensor and want to eliminate this possible problem, simply keep the rain sensor switch in the bypass mode, or install the jumper wire between the sensor terminals if it has been removed.

Programming of the sensors will be discussed in the Set Sensor Operation section of Programming and Operation (pg. 18).

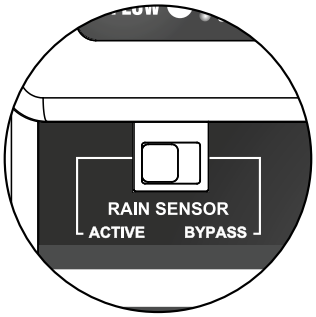

Sensor Bypass Switch

This switch will either enable or disable a Rain or Freeze sensor that has been connected to the controller. When the switch is in the Active position, the controller will adhere to the state of the sensor and shut down irrigation if the sensor is in an open state. If the sensor is in a closed state, the controller will operate as normal. If the sensor is in an open state, but you would like your automatic irrigation to operate as normal, simply move the switch to the Bypass position. The sensor will now be overridden and the controller will operate as programmed.

Once the Sensor Bypass Switch is in the Active position the System Status Dashboard will acknowledge the switch is in the Active position, and the Sensor Status light will light up. If the sensor is in an open state, the System Status Sensor light will be Red. If the sensor is in a closed state, the System Status Sensor light will be Green.

If you do not have a sensor installed, the position of the Rain Sensor switch can be in either the Active or the Bypass mode. This is true as long as the jumper wire connecting the two sensor terminals remain in place. If a jumper wire has been removed, it will be necessary to keep the Rain Sensor switch in the Bypass mode, otherwise no automatic irrigation will occur.

CONNECTING A HUNTER SOLAR SYNC

The Solar Sync is a "smart" control system that, when connected to the I-Core, will automatically adjust your controller's station run times based upon changes in local climate conditions. The Solar Sync incorporates a solar and temperature sensor to determine evapotranspiration, also known as ET. It also utilizes a Rain Clik and Freeze-Clik to shut down your irrigation when conditions arise.

The I-Core now has the Solar Sync software built into the controller. New I-Core controllers with built in Solar Sync are easily identified by the new **SOLAR SYNC SETTINGS** dial position on the facepack. Because the new I-Core has built in Solar Sync software, the Solar Sync Sensor is the only item to be connected to the controller. **The Solar Sync module will not be used and is not compatible with I-Core controllers that have Solar Sync software built in.**

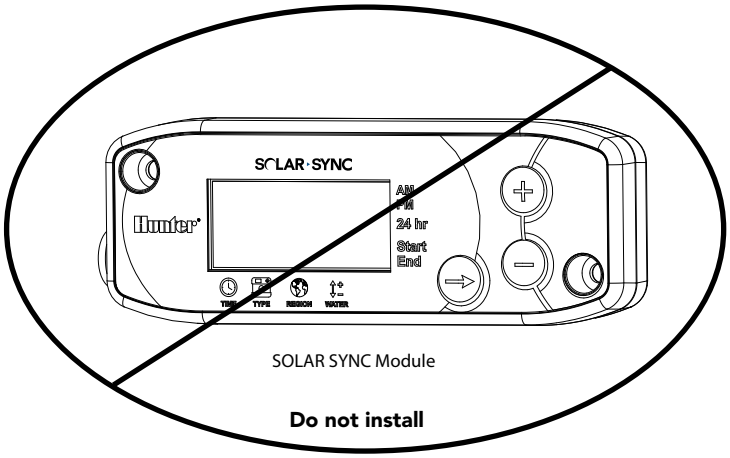

1. To connect the Solar Sync Sensor route the black and green sensor wires into the controller and connect them to the two S1 terminal positions. It does not matter which wire goes to which S1 terminal, but **the S1 terminal must be used when connecting a Solar Sync sensor.**
2. Mount the Solar Sync sensor in a location that receives as much sunlight as possible for best results. (see Solar Sync owner's manual for more details on sensor location)
3. **The Solar Sync Sensor must now be assigned to the SEN1 location in the controller.** Turn the dial to the **ADVANCED FEATURES** position.
4. Use the ▼ button to scroll to **Sensor Configuration** and press the **+** button.
5. In the SEN1 position use the **+** button to scroll through the options until **Solar Sync** is shown. The I-Core now recognizes that a Solar Sync sensor has been connected.

If connecting a **Wireless Solar Sync** to the I-Core, steps 1-5 are the same *except* in step 1, you will be connecting the green and black wires from the Wireless Solar Sync Receiver to the S1 terminal positions. The Wireless Solar Sync Receiver then communicates with the Wireless Sensor.

The Solar Sync can be programmed to adjust station run times by program. To set the I-Core to Solar Sync Adjust mode:

1. Turn the dial to Set Seasonal Adjustment. Use the PRG Button to select the desired program.
2. Press the **+/–** button to select By Solar Sync Seasonal Adjust mode. Repeat for other programs if needed (See Sensor Configuration on page 22).

Once a Solar Sync is connected and programmed the station run times will be adjusted according to the findings of the Solar Sync. The Solar Sync will automatically adjust station run times and can be programmed independently for each of the four I-Core programs. The Rain Clik and Freeze-Clik sensor incorporated in the Solar Sync can be programmed by station which is discussed in the Set Sensor Operation section.

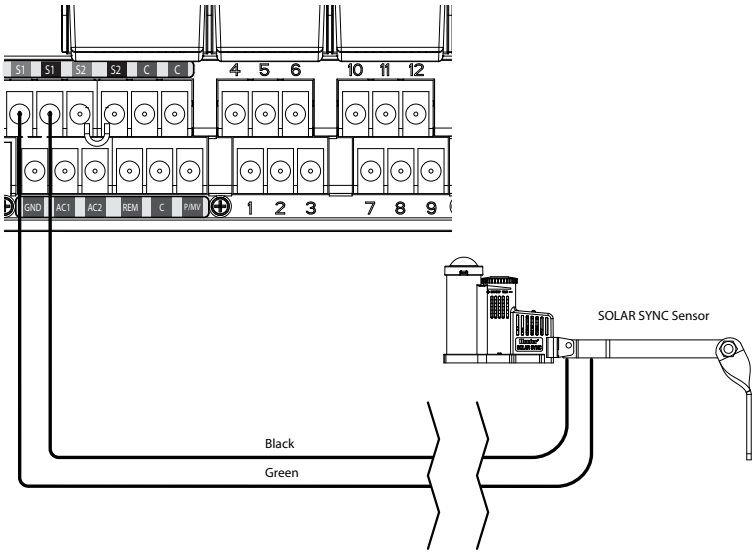

CONNECTING A FLOW SENSOR (OPTIONAL)

The I-Core is designed to operate primarily with the Hunter HFS Flow Sensors. However, some non-Hunter flow sensors can be used.

1. To connect a Hunter HFS Flow Sensor, route the pair of 18 AWG (1 mm) wires from the sensor into the cabinet (max distance of 1,000 ft.).
2. Locate a pair of S1 or S2 (S3 available on I-Core Metal) sensor red and black terminals on the Power and Accessories Terminals. Remove the jumper wire from one pair or S1 or S2 terminals. You may use either pair of S1 or S2 sensor terminals for a flow sensor. Connect the red wire from the HFS to the red terminal, and the black wire from the HFS to the black terminal.
3. I-Core allows you to connect two flow sensors at one time. In that case, one of the flow sensors would connect to the red S1 terminal and the black S1 terminal, while the second flow sensor would connect to the red S2 terminal and the black S2 terminal.

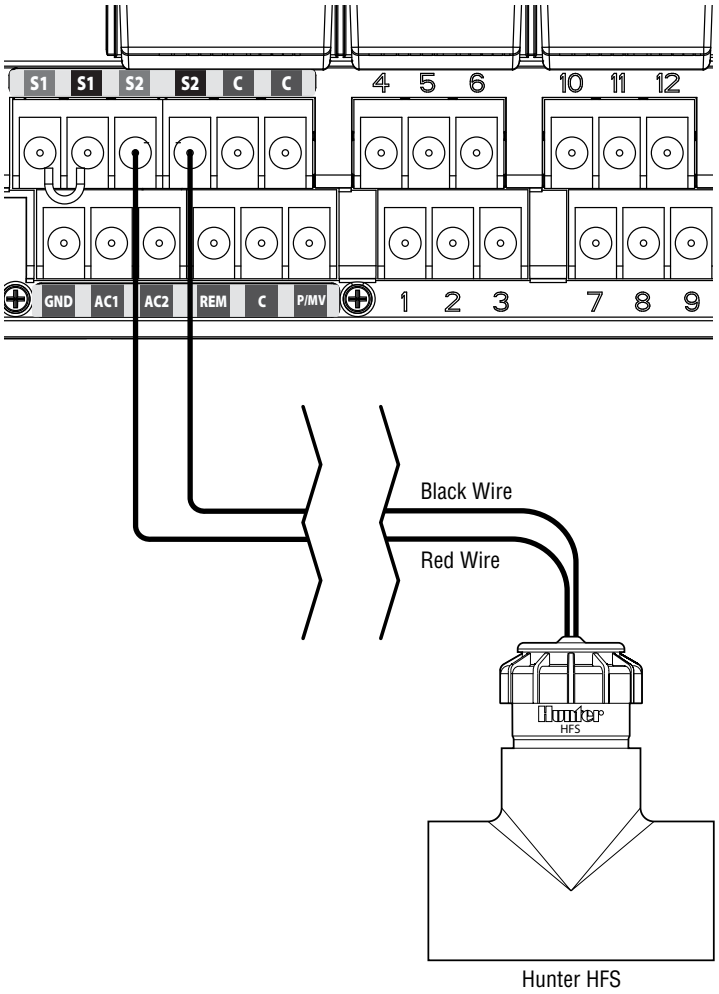

NOTE: I-Core has only one Pump/Master Valve output. If 2 flow sensors are used on 2 different points of connection, only one of them will have a master valve available for alarm shutdowns unless the single PMV is configured to operate 2 master valves simultaneously.

Flow setup, learning, and configuration will be described later in the manual under Advanced Features (pg. 22). A complete step by step Flow Monitoring procedure is also available in the Hidden Features section (pg. 29).

NOTE: If a flow sensor is going to be connected to the controller and flow will be monitored, there is critical information that needs to be read in the Controller Diagnostics and Troubleshooting section under System Status Dashboard Flow. It is very important to understand how the controller will monitor flow under certain circumstances and what diagnostic testing will be performed in alarm situations.

CONNECTING A REMOTE CONTROL (OPTIONAL)

The I-Core controller has factory installed SmartPort®. This provides a remote ready connection for Hunter ICR, ROAM, and SRR remotes.

To connect a remote, remove the weather resistant rubber cover on the SmartPort, align the remote receiver's pins with the connector, and push firmly until the receiver is fully seated. Refer to the remote control owner's manual for further information on how to operate your Hunter remote.

The I-Core can overlap remote commands allowing up to five valves to run simultaneously. Therefore, if a station is being operated and a remote command is sent to activate another station, that station will not turn off the existing station, but run both stations simultaneously.

If five valves are running and a new remote command is received to start another event, the command will be ignored. No new remote commands will be accepted until one of the five events completes watering. I-Core can run automatic programs and manual stations simultaneously. Each command will be displayed on the screen, indicating the event is watering, in the order the event took place.

Remote commands will also be allowed if the controller is in the OFF position. With the dial in the OFF position, the controller will respond to single station or program manual commands. In the OFF position, the display will not indicate that a station is watering; you will only see the System Status Dashboard Light turn green next to Station, indicating that there is a station running. When the controller receives a Manual Program remote command, the controller will only activate the stations within the Program. If a station within the Program is programmed to a sensor that is Active, that particular station will not operate and will be put into suspend mode. The controller will count down that station's programmed run time without actually running the station.

If there are stations within the program that follow this station numerically and are NOT programmed to the sensor, these stations will run and the controller will observe the remote command and follow through the rest of the program. The programming of stations to a sensor will be discussed in the Set Sensor Operation section of the manual (pg. 18).

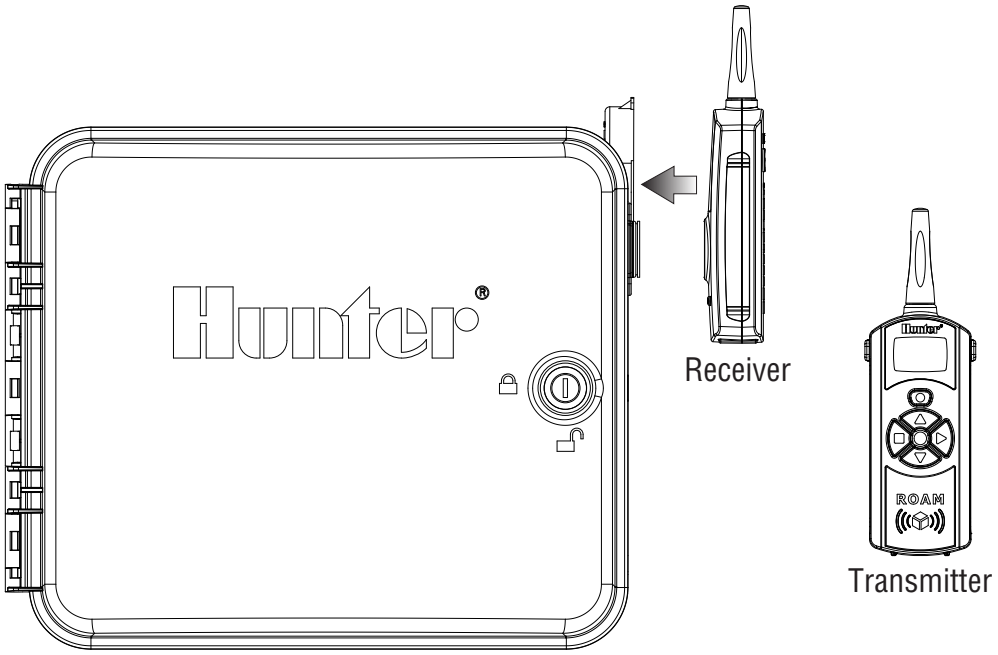

POWER FAILURES

Due to the possibility of power failures, the I-Core has nonvolatile memory to preserve programming data indefinitely. The 9-volt battery is required for programming of the controller in the absense of AC power. Both the 9-volt battery and lithium battery (if a 9-volt battery is not installed), will maintain the current time and day during power outages. If the power goes out, the display will acknowledge there is No A/C Power. No stations will water if the display reads No A/C Power, until AC power is restored to the controller.

QUICK START

The I-Core controller offers maximum scheduling flexibility including four programs, each with up to eight daily start times, permitting plants with different watering requirements to be separated on different day schedules. Multiple start times permit morning, afternoon, and evening watering, perfect for the establishment of new lawns and thirsty annual flowers. A built in 365-day calendar clock accommodates odd/even watering restrictions without requiring monthly reprogramming. You may simply designate days of the week you want to water for ease or use the convenient interval day watering. All of this and more will be explained in detail throughout the programming and operation section. You will begin to notice just how easy the I-Core programming can be and the capabilities of advanced features the I-Core offers to set this controller apart from its competition.

The following are basic programming instructions to initially program your I-Core controller. If more complex programming is required, please reference the I-Core Programming following this page.

1. **Set Current Date/Time**: Use the ◄ and ► buttons to navigate, and the **+ / –** buttons to change the flashing selection to the correct Date and Time.
2. **Set Program Start Times**: Each automatic program has 8 start times available. Use the ◄ and ► buttons to navigate through the different start times, and the **+ / –** buttons to change the time. The time changes in 15 minute increments, and by holding down the **+ / –** buttons the time will scroll faster. Use the PRG button to select individual programs.

> ⚠ **NOTE: The number shown on the screen does not indicate a station number, but indicates an individual start time for that particular Program.**

3. **Set Station Run Times**: This dial position allows you to assign a station's run time with a particular program. If you need to change the program, you are assigning a station run time, simply press the PRG button. Use ◄ and ► buttons to navigate through the station numbers, and the **+ / –** buttons to change the length of run time in hours: minutes.
4. **Set Days to Water:** Use the PRG button to select the Program. Use the ▲ or ▼ buttons to move the ► cursor next to a day, and then use the **+ / –** buttons to indicate a water day or a non water day. When using Days of the Week scheduling, a ✓ will indicate a water day, and a _ will indicate a No-Water Day. The ◄ and ► arrow buttons will change the schedule type, including Days of the Week, Odd/Even Days, and Interval Watering.

> ⚠ **NOTE: For Days of the Week scheduling, a check mark indicates a water day, and no check mark indicates a non water day. When programming Odd/Even and Interval watering schedules, the X that appears next to the day will indicate a non water day for that schedule, and all other days with no X will be available water days depending on the schedule programmed.**

5. **Set Pump Operation (optional):** The Pump/Master Valve output may be set by station. If a Pump/Master Valve is in use you need to make sure the stations are set to **On**. If no Pump/Master Valve is in use, this is not required. The ◄ and ► buttons scroll through the stations and the **+ / –** buttons set the stations to **On** or **Off**.
6. **Return the Dial to the Run Position:** This is all that is required for the most basic operations. The I-Core will water automatically in any dial position except **OFF**, with the previous steps discussed being programmed.
7. **Test Program:** The test program will start every station in the controller sequentially, in numerical order, for the specified time. Turn the dial to the **RUN** position. Hold down the PRG button for three seconds. The screen will change automatically and display station number 1 and a flashing run time of 0:00. Enter the desired run time in hours: minutes by using the **+ / –** buttons. Within five seconds the test program will begin. Test program will operate stations in sequential order.
8. **Manual Start:** With the dial in the **RUN** position, there is a shortcut to manually start a program. Press and hold the ► button. The screen will change and indicate station 1 and the programmed run time for Program A. If you would like to change the Program you want to manually run, release the ► button and press the PRG button to change the Program selection. The manual program will start in a few seconds.

Setting Current Date and Time

The **SET CURRENT DATE AND TIME** dial position allows you to set the current date and time in your I-Core controller.

1. Turn the dial to the **SET CURRENT DATE/TIME** position.
2. The year will be flashing in the display. Use the **+ / –** button to change the year. Press the ► button to proceed.
3. The month will be flashing. Use the **+ / –** button to change the month. Press the ► button to proceed.
4. The day will be flashing. Use the **+ / –** button to change the day. Press the ► button to proceed and set the time.
5. Use the **+ / –** button to select AM, PM, or 24 HR. Press the ► button.
6. Use the **+ / –** button to set the hour. Press the ► to set the minutes. Use the **+ / –** button to change the minutes until they are correct. The correct date and time have now been set. Always return the dial to the RUN position when you are finished programming the controller.

Setting Program Start Times

The SET PROGRAM START TIMES mode allows you to program start times for each of the four programs (A, B, C, or D) independently. Up to eight start times per day can be set for each program.

NOTE: Two programs are allowed to run at the same time if there Start Times coincide or overlap. This is an important element to consider when programming the Start Times if the hydraulics of your system do not allow for more than one station to run at the same time.

1. Turn the dial to the **SET PROGRAM START TIMES** position.
2. Program A and start time 1 will be displayed. If necessary, you can select Program B, C, or D by pressing the PRG button.
3. The program start time will be flashing. Use the **+ / –** button to change the start time. The time will change in 15 minute increments. Press the ► button to select an additional start time if you would like more than one watering cycle per day to occur for that program. Programs A, B, C have eight start times per day, while program D has 16 start times. Press the PRG button to change between programs A, B, C, and D to assign a start time to the particular program.
4. To eliminate a program start time turn the dial to the **SET PROGRAM START TIMES** position, use the PRG button to select the program and the ► button to select the start time you would like to eliminate. Press the **+ / –** button until you reach 12:00 AM. Press the **–** button once more and the display will show dashed lines **--:--**, indicating no start time.

If a program start time is skipped (for example, a start time is set for 1 and 3), the start time will be accepted, but when returning to this dial position, the start times will be moved to sequential order (the Start Time 3 will be moved to 2).

If an earlier start time is set for a higher-numbered start (for example, start time 1 is set to 4:00 AM, and start time 2 is set to 3:00 AM), when returning to this dial position the start times will have been reorganized in chronological order. The lowest numbered start time will always have the earliest time of day (in the example, the start time 1 will be at 3:00 AM and start time 2 at 4:00 AM).

NOTE: One start time will activate all stations sequentially that are assigned to a program. Multiple start times are typically used when separate morning, afternoon, or evening watering cycles are required. You cannot enter a start time for each station. If you only want to water your stations once a day within a particular program, you would only program start time 1. The rest of the start times 2 through 8 would be left blank --:--.

The I-Core controller has the ability to operate five Hunter valves at one time, and, therefore, allows for more than one program to run at the same time. Only two programs can be allowed to run concurrently. If you set two programs to have the same start time, or their start times overlap, both programs will run concurrently. This is a great feature if you have a short water window and the available water to feed multiple stations; however, it could become an issue if the flow of your irrigation system cannot support operating multiple stations at the same time.

If you do not have the available water to operate multiple stations at one time, you will need to consider and calculate when each program will finish, or review the Total Watering Time for each program within the **ADVANCED FEATURES** dial position. Each Program's Start Time must be programmed to start after the previous Program finishes in order to eliminate the possibility of multiple Programs watering at once.

Setting Station Run Times (Length of Watering for Each Station)

The SET STATION RUN TIMES mode allows you to enter a length of run time for each station assigned to a particular program. Each station that has a run time associated with a program will be activated and operate one after another sequentially with each start time for that program.

1. Turn the dial to the **SET STATION RUN TIMES** position.
2. The display will show the station number and program. Use the PRG button to select a program.
3. Use the **+ / –** button to change the station run time on the display.
4. Use the ► button to advance to the next station for which you would like to enter a run time.
5. When finished entering run times, rotate the dial to the RUN position.

By pressing the PRG button, you can move between programs while staying on the same station. However, it is recommended that one program is completed before going on to the next program.

NOTE: When entering run times the Seasonal Adjusted run time will be displayed in the lower right corner of the display. The default Seasonal Adjustment setting is 100%. If the ACTUAL value is different from the PROGRAMMED value, the Seasonal Adjustment has been changed from the default of 100% to a new value.

The ACTUAL run time is the duration the station will water based upon the seasonal adjustment value. Detailed information on Seasonal Adjustment can be found in the Set Seasonal Adjustment section (pg. 17).

Setting Days to Water

SET DAYS TO WATER mode allows you to select days you would like to water for each program independently.

1. Turn the dial to **SET DAYS TO WATER** position.
2. Program A water days will be displayed. Use the PRG button to select your desired program (A, B, C, or D).
3. Use the ◄ and ► button to change from 1) Specific Days of the Week; 2) Odd Day Watering; 3) Even Day Watering; or 4) Interval Day Watering. Each program can only be assigned one type of water day option at a time.

Selecting Specific Days of the Week to Water

1. Turn the dial to **SET DAYS TO WATER** position.
2. Use the PRG button to select your desired program (A, B, C, or D).
3. Use the ◄ and ► button to select Days of The Week watering mode. Water Days will be displayed at the bottom of the screen. With the cursor on Monday, press the **+** button to activate the day or the **–** button to cancel watering for that day. A ✓ indicates a water day, and a _ indicates a non-water day. After pressing the **+ / –** button on a specific day the cursor will automatically move to the next day. Press the ▲ or ▼ buttons to move quickly to a specific day without making a water or non water selection.

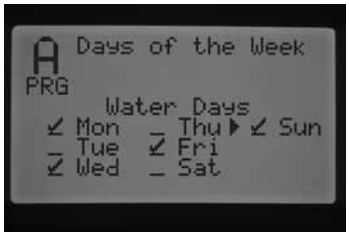

This is program specific so you will need to repeat these steps for each required program.

Selecting Odd or Even Days to Water

This feature uses numbered days of the month for watering instead of specific days of the week. (For example, Odd Days 1st, 3rd, 5th, etc. and Even Days 2nd, 4th, 6th, etc.)

1. Turn the dial to **SET DAYS TO WATER** position.
2. Use the PRG button to select your desired program (A, B, C, or D).
3. Press the ◄ and ► button until **Odd Days** watering or **Even Days** watering is shown on the display.

4. In either the Odd or Even Days mode, there will be a ****NO WATER DAYS**** description flashing on the display. Within the Odd or Even mode you can select days that watering will NOT take place. This is a feature that is frequently used to omit watering on a specific day, for example, a mowing day. Press the ▲ or ▼ buttons to move through the days of the week and press the **+** button for the days that you DO NOT want to water. By pressing the **+** button on a specific day, an **X** will appear indicting that the day is a Non-Water Day.

5. To change a Non-Water Day, use the ▲ or ▼ buttons to go to that day and press the **–** button. The **X** will disappear, and the day will be available for Odd or Even watering again.

NOTE: The 31st of any month and February 29th are always "OFF" days when Odd watering is selected.

Selecting Interval Watering

This feature is convenient if you want to have a more consistent watering schedule without having to worry about the day of the week or the date. The interval number you select is the actual interval of days on which watering will occur. For example, if you have an interval of 3 days watering every third day. The days remaining (Remaining) indicates how many days until the next watering occurs. For example, if you select interval 3 with 1 days remaining, watering will begin tomorrow at the scheduled time. At midnight the days remaining will change from 1 to 0, indicating that the controller will water that day.

1. Turn the dial to the **SET DAYS TO WATER** position.
2. Use the PRG button to select your desired program (A, B, C, or D).
3. Press the ◄ and ► button until **Interval Days** is displayed. The Interval will be flashing. Use the **+ / –** button to select the interval of days on which watering will occur.
4. Press the ▼ button once to program days remaining, if required. One day remaining means it will begin watering the next day.

5. In the Interval Watering mode, there will be a No Water Days description on the display. Within the Interval Watering mode you can select days that watering will not take place. This is a feature that is frequently used to omit watering on a specific day, for example, a mowing day. Press the ▼ button until the cursor points to Monday. Once the cursor points to Monday the **No Water Days** description will start flashing. Press the ▲ or ▼ buttons to move through the days of the week and press the **+** button for the days that you DO NOT want to water. By pressing the **+** button on a specific day, an **X** will appear indicting that the day is a Non-Water day.

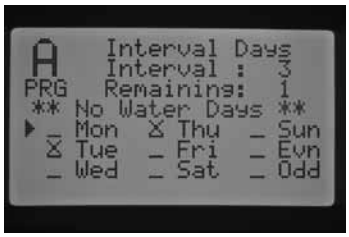

6. To change a No Water Day, use the ▲ or ▼ buttons to go to that day and press the **–** button. The **X** will disappear, and the day will be available for Interval watering again.
7. After programming water days, rotate the dial back to the **RUN** position.

Set Seasonal Adjustment

Seasonal Adjustment is used to make run time changes without having to reprogram all of the individual station run times. This feature is perfect for making small changes that are necessary as weather conditions change due to seasonality. For example, during hotter times of the year, your landscape may require a bit more water. Seasonal adjust can be increased so that stations will run longer than the programmed time. Conversely, as fall approaches, the seasonal adjust can be reduced to allow for shorter station watering durations.

There are three separate seasonal adjust modes that can be used independently for each Program. Again, the selections are by program, and the steps need to be taken for each program:

Global Seasonal Adjust (PRG Global) – This selection is a program global seasonal adjustment, which increases or decreases station run times by a fixed %. All stations that have a run time within the Program will be adjusted according to the Global Seasonal Adjust value.

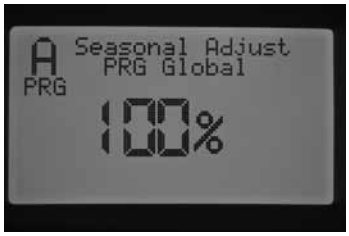

1. Turn the dial to **SET SEASONAL ADJUSTMENT**. Use the PRG button to select the desired program.
2. Press the **+ / –** button to select the PRG Global seasonal adjust mode.
3. While in the PRG Global mode, press the ▼ button and the percentage will start flashing.
4. Press the **+ / –** button to increase or decrease the global seasonal adjust value between 0 and 300%, which will affect all the stations within the program you have selected.

Monthly Seasonal Adjust (By Month) – All of the seasonal adjustment values for the full year can be programmed into the controller at one time. Each month, the controller will switch to the new seasonal adjust value.

1. Turn the dial to **SET SEASONAL ADJUSTMENT**. Use the PRG button to select the desired program.
2. Press the **+ / –** button to select By Month seasonal adjust mode.
3. While in the By Month mode, press the ▼ button and the seasonal adjust valve forJanuary will start flashing, and the ► cursor will indicate January.
4. Press the **+ / –** button to increase or decrease the seasonal adjust value between 0 and 300% for the month selected, which will affect all the stations for the Program you have selected.
5. By pressing the ▲ or ▼ buttons, you may scroll through the months to select the specific month you want to adjust.

Solar Sync Adjust (By Solar Sync) – This mode allows seasonal adjustment to occur on a daily basis when a Hunter Solar Sync is connected to the controller. This provides for the maximum amount of water saving while promoting healthy plant material. Solar Sync will change the seasonal adjust % daily based upon weather conditions.

1. Turn the dial to **SET SEASONAL ADJUSTMENT**. Use the PRG button to select the desired program.
2. Press the **+ / –** button to select By Solar Sync seasonal adjust mode.

The Solar Sync will take over and the percentage will change according to the findings of the Solar Sync sensor. If you set seasonal adjust mode to Solar Sync and you DO NOT have a Solar Sync connected, the controller will automatically keep the seasonal adjust percentage at 100%.

There are also further steps in programming of the I-Core to assign the Solar Sync, Rain, and Freeze sensor to shut down specific stations. This will be detailed in this manual under Advanced Features, Sensor Configuration, and Set Sensor Operation.

Set Pump Operation

The default is for all stations is Pump/Master Valve circuit ON. The Pump/Master Valve circuit can be set ON or OFF by station, regardless of which program the station is assigned. This feature may be utilized on systems where it is desirable for a booster pump to operate with certain zones. It could also be used for systems that have two points of connection and some valves need a master valve/pump start to turn on and other valves operate on a different water source that do not need the master valve/pump start.

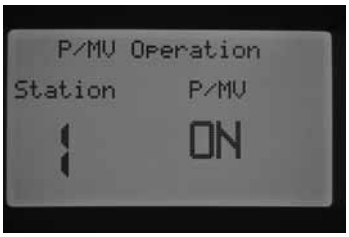

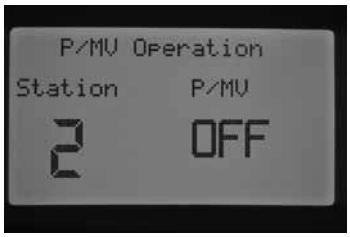

To Set Pump Operation:

1. Turn the dial to **SET PUMP OPERATION** position.
2. Press the ◄ and ► buttons to select a particular station.
3. Use the **+ / –** button to turn the Pump/Master Valve circuit ON or OFF for a specific station.
4. When finished, turn the dial back to the **RUN** position.

Cycle and Soak

The Cycle and Soak feature allows you to split a station's run time into more usable, shorter watering durations. This feature is useful when applying water to slopes and tight soils because it automatically applies water more slowly, helping to prevent run off from occurring. You should enter the Cycle time as a fraction of the station's watering time, and the Soak time as the minimum number of minutes required before watering can occur again for the next Cycle. The total number of cycles is determined by taking the total programmed station run time and dividing it by the Cycle time.

Example: Station 1 requires 20 minutes of watering, but after 5 minutes, runoff occurs. However, after 10 minutes all the water is absorbed. The solution would be to program 20 minutes for the station run time, 5 minutes for the Cycle time, and 10 minutes for the Soak time.

1. Turn the dial to **CYCLE AND SOAK** position
2. Use the ◄ and ► buttons to select the station that you would like to program Cycle and Soak.
3. Cycle will flash OFF. Use the **+ / –** button to set the Cycle time. You may select a maximum Cycle time of up to 60 minutes.
4. Press the ▼ button to set the Soak time. Use the **+ / –** button to set the Soak time. You may select a maximum Soak time of up to 120 minutes.
5. Rotate the dial to the **RUN** position when finished programming all Cycle and Soak times for yourdesired stations.

It may be beneficial to understand how the cycle and soak application process works. For example, Station 1 has been programmed to have a 5 minute cycle time and a 10 minute soak time. Station 1 may not exactly come back on for its second cycle immediately after 10 minutes of soaking. If there are other stations within the program that have run time after Station 1, the program in numerical order will continue to run each station that has a run time in the Program before it goes back to Station 1 for another cycle. The Program will water each station for its programmed run time or first cycle time, before it looks back at station 1 to complete its cycle and soak. If no other stations in the Program have a cycle and soak programmed, then Station 1 will continue with its second cycle after all stations have completed and then go into cycle and soak one after another until the total run time has completed.

Set Sensor Operation

The **SET SENSOR OPERATION** dial position is specifically used to set a response for a sensor to a station. The I-Core controller is capable of monitoring two individual Clik-type sensors, including the Solar Sync rain/freeze sensor. You may have a combination of two Clik sensors, one Clik sensor and one flow sensor, one Clik sensor and a Solar Sync rain/freeze sensor, or two flow sensors. The I-Core Metal version controller has an additional sensor terminal, allowing up to 3 sensors to be installed and programmed. Additional programming assignment of the sensor(s) to stations MUST be done in order for the sensors to shutdown irrigation. The programming of the two available sensor inputs is described in the Advanced Features section under Sensor Configuration (see pg. 22) and must be completed prior to setting sensor operation.

NOTE: If using a Solar Sync it will show as a Clik sensor. There is not a special distinction or selection for the Solar Sync, and will be described as a Clik sensor for the remainder of this section.

If two Clik sensors are installed, the display in the **SET SENSOR OPERATION** dial position will allow you to program a response for each sensor according to a particular station. A Sensor Response will either show a ✓, indicating that the sensor will shut down irrigation, or _ , indicating that the station will ignore the state of the sensor and continue in its normal operation.

NOTE: If using a Solar Sync, the Solar Sync sensor terminal will automatically be used for both Rain and Freeze inputs as well as weather adjustment information. The display will show which sensor has caused a shutdown.

Both sensors programmed for Station 1

Sensor 1 only programmed for Station 1

Sensor 2 only programmed for Station 1

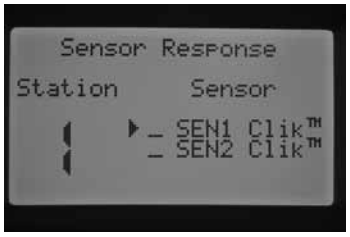

No sensor programmed for Station 1

Rotate the dial to the **SET SENSOR OPERATION** position.

1. Use the ◄ and ► buttons to select the station that you would like to program a sensor response.
2. The default is to have the sensor input active for each station, therefore indicating a ✓. The ► cursor will be flashing on SEN1. Use the **+** button to enable sensor operation or the **–** button to disable the sensor.
3. Once SEN1 has been programmed the ► cursor will move to SEN2. Use the **+** / **–** button to enable or disable SEN2 for the station.
4. Rotate the dial to the **RUN** position when finished programming sensor operation for the desired stations.

If one Clik sensor and one Flow sensor are installed, the screen in Set Sensor Operation will show only one option of selecting a sensor response for the one Clik Sensor. The Clik sensor will either appear as SEN1 or SEN2, depending on which sensor terminals that Clik sensor was connected. You will give the sensor a ✓ if you want the sensor to shut down irrigation, or a _ if you do not want the irrigation to shut down in the case of a sensor state change. The flow sensor configuration will not appear as an option to change in the Set Sensor Operation screen. The programming of the Flow sensor will be done in the **ADVANCED FEATURES** dial position and will be discussed further in that section.

SEN 2 is configured for a Flow Sensor

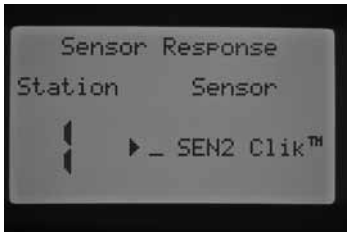

SEN 1 is configured for a Flow Sensor

Rotate the dial to the **SET SENSOR OPERATION** position.

1. Use the ◄ and ► buttons to select the station that you would like to program a sensor response.
2. The default is to have the sensor input active for each station, therefore indicating a ✓. The cursor will be flashing on either SEN1 or SEN 2. Use the **+** button to enable sensor operation or the **–** button to disable the sensor.
3. Rotate the dial to the **RUN** position when finished programming sensor operation for the desired stations.

If you have two flow sensors configured to each one of the sensor terminals, you will not be given the option to select a response for a weather sensor. When you turn the dial to **SET SENSOR OPERATION**, the screen will display **No Clik or WRC**. The configuration of the Flow sensors will be discussed in the **ADVANCED FEATURES** dial position.

SEN 1 and SEN 2 are configured for Flow Sensors

Once you have installed and programmed a sensor and set a response to your desired stations, the controller will acknowledge the state of the sensor. When the sensor is Inactive or in a closed state, the System Status Dashboard will have a green light next to Sensor, indicating that irrigation will occur as normal. If the sensor is in the Active mode or open state, the controller will display a red light in the System Status Dashboard next to Sensor. This indicates that the sensor is active and certain automatic irrigation will not occur. When a sensor becomes active the controller will also indicate the status of the sensor on the display in the RUN position.

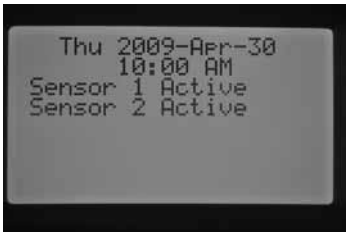

Once a sensor becomes active, the controller will put irrigation in a suspend mode. The controller will acknowledge a program's start time and the display will indicate where the program would be watering. However, whether or not the station is set to respond to the sensor will determine if the station turns on or not. If the station is set to respond to the sensor, the display will count down the stations run time and indicate that the station is Suspended. If the sensor state changes and becomes inactivate, the station will resume watering at the given run time on the screen. If a station is not set to respond to a sensor, the station will water as normal and ignore the state of the sensor.

A remote single station command will override the sensor state, whether the station is set to respond or not, and that station will water for the desired run time. When you activate a manual program command by

a remote, the controller will acknowledge the stations that have been programmed to respond to a sensor and those stations will not water and be in Suspend Mode.

The same rules apply for activating a station or program manually by turning the dial to the manual position. A manual single station will override an active sensor; however, a manual program will adhere to the rules of shutting down irrigation if the station within the program is set to respond to the sensor.

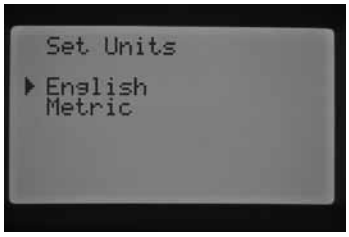

Manual Operation

This dial position enables immediate operation of either a single station or an automatic program. It also is used to Learn Expected Flow, which is a key element in flow monitoring. You may run more than one manual program or station at the same time, because the I-Core has the ability to run up to five stations or events at once. To initiate multiple events, you will need to turn the dial from **MANUAL OPERATION** to **RUN** and then return to the **MANUAL OPERATION** dial position to begin the initiation of another event. Use the ▲ or ▼ buttons to navigate through the manual feature selections. When the ► cursor is pointing to the selection you want, simply press the **+** button to select the feature.

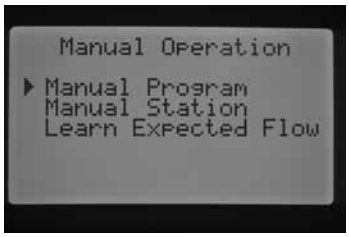

Manual Program

This will allow an entire program to be run immediately to be started at any station. It is important to know that if a particular station is selected as the starting point it will run from that that point, to the end. The manual will not go back and run the stations that were initially skipped in the program.

1. Press the PRG button to select the program you would like to run.
2. Turn the dial to **RUN** to start the program at the beginning. Each station will run for its automatic programmed time (including cycle and soak) settings, and the stations with no run time in the selected program will be skipped. You may increase the run time for the first station in the manual sequence, however, each station following will run for its automatic program time.
3. To start later in the program at a higher numbered station, use the ◄ or ► buttons to select the station you want the manual to start on.
4. Turn the dial to **RUN** and the manual program will begin from the desired station. The manual will continue until the last station in the Program and then stop.
5. After the manual program begins, you may also use the ► button to scroll to a particular station or advance to a station more quickly. It is important to know that once you advance to the next station by using the ► button you will not be able to return to the previous station.

Manual Station

Manual Station allows any individual station to be started immediately.

1. Use the ◄ or ► buttons to select a particular station.
2. Use the **+** button to increase the flashing run time on the screen until the desired run time is achieved. You can assign a run time from 1 minute to 12 hours.
3. Turn the dial to **RUN**, and the station will begin irrigating.

Up to five Hunter valves can be operated simultaneously.

Learn Expected Flow

This feature is used to learn station flows and is the final element that needs to be programmed in the controller in order for flow monitoring to occur. You may learn expected flows by particular stations, or you may learn all the stations at once. It is important that the following programming steps must be completed before you are able to learn flow: (1) You must select a flow sensor in the Sensor Configuration screen in Advanced Features; (2) You must program the station flow to be monitored, which is found in the Flow Operation screen in Advanced Features; and (3) The station must have a programmed run time in the **SET STATION RUN TIMES** dial position. A complete Flow Monitoring procedure will be discussed in the Flow Monitoring section in the manual (pg. 29).

If a sensor is not selected in the Sensor Configuration screen, a station's flow is not set to be monitored or stations do not have programmed run times, the controller will not allow you to learn expected flow. If the user has not selected a flow sensor in the Sensor Configuration screen, the controller will display **No Flow Sensor** while in the Learn Expected Flow screen.

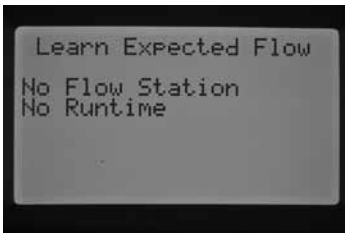

If the user has not selected a station's flow to be monitored the controller will display **No Flow Station**, as well as **No Runtime** even if there is a run time associated with the stations.

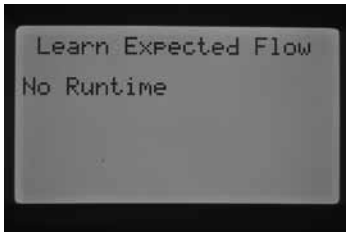

If the user has not programmed station run times in the SET STATION RUN TIMES screen, the display will read **No Runtime**.

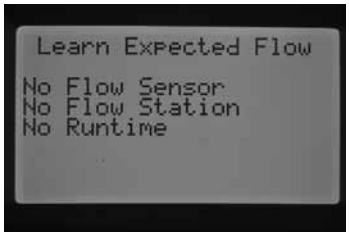

If each one of these key aspects have NOT been programmed, the display will indicate each missing link of the Learn Expected Flow process.

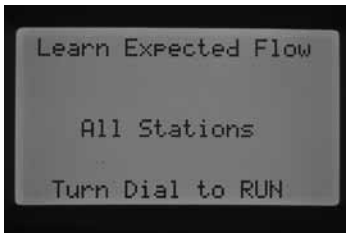

Once these settings have been entered, the controller will allow for Learn Expected Flow.

If you want to Learn Expected Flow for All Stations, simply turn the dial to Run. The controller will go into diagnostic testing of the actual flow for each station that has been previously programmed to have its flow monitored. This may take approximately one minute for each station's flow to be learned. It is important to know that during the learning process the station will actually turn on and water in the field.

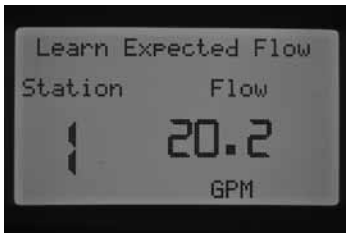

If you want to learn the flow of a specific station, use the ◄ or ► buttons to select the station that you would like to learn the flow for.

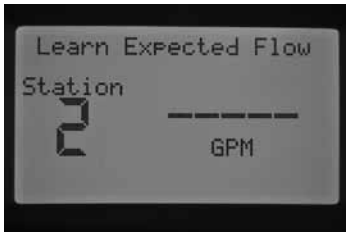

Once the correct station number is displayed, turn the dial to Run. Again, the controller will go into its diagnostic flow testing for that particular station. The controller will activate the station and the learning process may take up to a minute. Once the controller has Learned Expected Flow the controller will shut the stations down and the controller will go back to the main current date/time screen.

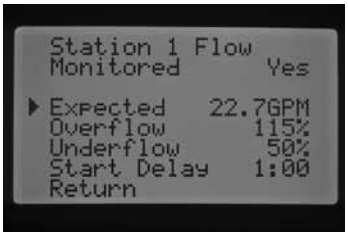

After completing the learning process, you can review the Expected Flow for each station. Rotate the dial to Advanced Features and use the button to select flow operation. The expected flow will now be displayed. The Expected Flow may be changed manually in this screen, or you may relearn any of the stations flow by repeating the process just discussed. This will be necessary if additional heads have been added, heads have been removed, or nozzles have been changed to a station, which will all adjust the flow.

System Off

To completely stop all irrigation, including any stations which are already running, turn the dial to the System OFF position. Within a few seconds a large OFF will appear in the display and any stations which were running will be shut down, and no new automatic irrigation will be allowed to start.

It is also possible to set a programmable period that the controller will remain off in the System Off dial position. This is known as the Programmable Rain Off feature, which will be discussed in the Programmable Rain Off section.

A command to operate the controller from a hand-held remote (SRR, ICR, ROAM) will activate the controller while the dial is the System Off position. This is true for a remote single station command or a remote Program command. The display will continue to show OFF, however the command will be accepted and the controller will begin watering the station or Program.

ADVANCED FEATURES

Advanced features can be accessed by turning the dial to the **ADVANCED FEATURES** dial posiiton. Use the ▲ or ▼ buttons to navigate through the Advanced Feature selections. When the ► cursor is pointing to the selection you want, simply press the **+** button to select the feature. Use the ◄ button to go back to the previous menu. A detailed description of each selection within the Advanced Features are provided below.

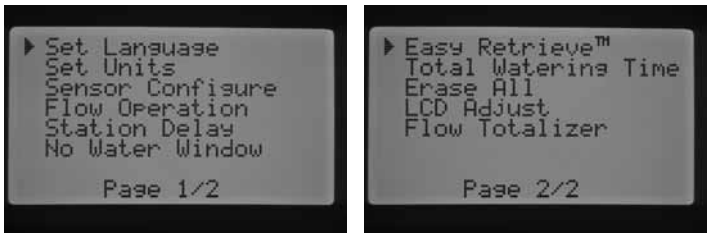

Advanced Features

Set Language

This feature allows you to customize the displayed language to English, Spanish, French, German, Portuguese, or Italian.

1. Turn the dial to the Advanced Features position. Use the ▲ and ▼ to select **Set Language** and use the **+** button to enter.
2. Use the ▲ or ▼ buttons to navigate through the language selections.
3. Press the **+** button when the ► cursor is next to the language you want.

Set Units

This function allows you to set the unit of measure to either English or Metric.

1. Turn the dial to the **ADVANCED FEATURES** position. Use the ▲ and ▼ to Set Units and use the **+** button to enter.
2. Use the ▲ or ▼ buttons to select English (GPM) or Metric (LPM).
3. Press the **+** button when the ► cursor is next to the unit of measure you prefer.

Sensor Configuration

It is important to complete this step in Advanced Features if you are going to be connecting a sensor to the controller. If you are not going to be connecting a sensor to the controller this section may be skipped. The Sensor Configure feature allows you to program the SEN1 or SEN2 terminals to accept a Hunter Clik-type sensor, a Solar Sync sensor, an HFS flow sensor, or a non-Hunter flow sensor. It is important to program the correct flow sensor size. HFS sensors are always installed in a Hunter FCT fitting, and selecting the correct fitting size automatically sets calibration for the sensor.

Turn the dial to the **ADVANCED FEATURES** position. Use the ▲ and ▼ to select Sensor Configuration and use the **+** button to enter.

Sensor Options

Flow Sensors

Clik sensor	With the ► button pointing to SEN1, press the **+** / **–** button to scroll through the possible choices. When you find the selection or sensor that correlates with the sensor you have wired into SEN1 terminals, simply leave it on that choice.
HFS 100 (1" Schedule 40 Sensor Body)	
HFS 150 (1 ½" Schedule 40 Sensor Body)	
HFS 158 (1 ½" Schedule 480 Sensor Body)	
HFS 200 (2" Schedule 40 Sensor Body)	
HFS 208 (2" Schedule 80 Sensor Body)	
HFS 300 (3" Schedule 40 Sensor Body)	
HFS 308 (3" Schedule 80 Sensor Body)	
HFS 400 (4" Schedule 40 Sensor Body)	
Custom 1, Custom 2, and Custom 3	

By selecting a Clik sensor as an option for SEN1 or SEN2 within the Sensor Configuration screen, you will now be allowed to select by station one or both of the Clik Sensor selections to shut down irrigation in the Set Sensor Operation screen, which was previously discussed.

The factory presets for SEN1 and SEN2 will be programmed as Clik sensors. If you do not have a sensor wired into the controller the settings under Sensor Configuration may be ignored. As long as the jumper wires connect the two sensor terminals together inside the controller, the circuit will remain closed, and the sensor will not false alarm or cause the irrigation to shutdown.

SEN 1 & 2 - CLIK-TYPE SENSORS

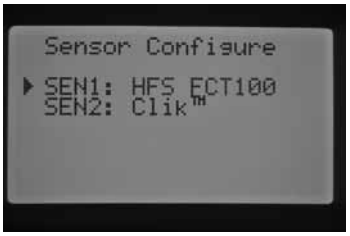

SEN 1 - FLOW SENSOR (HFS FCT100)
SEN 2 - CLIK-TYPE SENSOR

SEN 1 - CLIK-TYPE
SEN 2 - FLOW SENSOR (HFS FCT100)

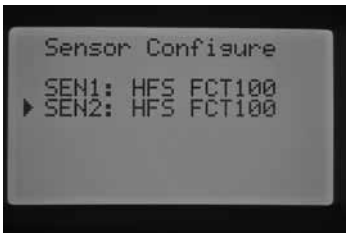

SEN 1 & 2 - FLOW SENSORS (HFS FCT100)

Configure a non-Hunter Flow Sensor

Custom 1, Custom 2, or Custom 3 can be selected to program a non-Hunter flow sensor. Press the ► button when you have the Custom choice selected. The controller will allow the ability to program the K-Factor and Offset specified by the flow sensor manufacturer (please consult Hunter for compatible flow sensors).

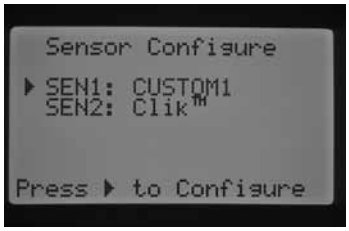

Use the ▲ or ▼ buttons and the ◄ and ► buttons to navigate through the Custom, K-Factor, and Offset screen. Once you navigate to a number, it will flash. The number may be changed by pressing the **+** / **–** button to either increase or decrease the value. Once you have completed entering the K-Factor and Offset specified by the manufacturer of the flow sensor, use the ▼ button to return to the main Sensor Configuration screen.

If an HFS sensor has been selected and programmed in the Sensor Configuration screen, the main RUN screen will indicate a flashing flow rate anytime a station is irrigating. If the station's flow has not been learned or the station has not been enabled for flow monitoring, which will be discussed in the Flow Operation and Manual Operation section, the screen will still indicate a total flow of 0.0 GPM because the HFS has been selected.

Flow Operation

The Flow Operation feature allows you to program flow monitoring functions for each station. You can program the controller to either monitor flow for a station or not monitor flow for a station.

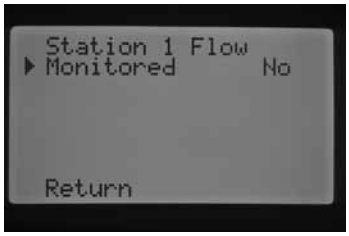

1. Turn the dial to the **ADVANCED FEATURES** position. Use the ▲ and ▼ to select **Flow Operation** and use the **+** button to enter.
2. Use the ◄ and ► buttons to navigate to the station you would like to program.
3. The cursor will be displayed next to Monitored. Use the **+** / **–** button to enable or disable flow monitoring for that station.

If flow monitoring is enabled (Yes), you will be given the ability to change certain characteristics of each stations monitored flow. As soon as the station is enabled the new screen will appear with the following selections:

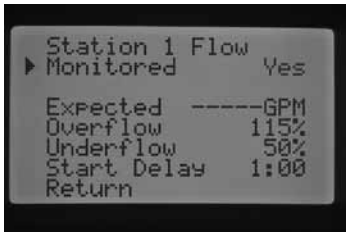

- **Expected Flow** – the amount of flow expected for that station in Gallons Per Minute (GPM)or Liters Per Minute (LPM)
- **Overflow** – Can be set from 110% to 300% of Expected Flow. During system operation, if the station flow exceeds the Overflow limit, the controller will shut the system down and begin diagnostic testing. For example, if the expected flow is 20 GPM and the overflow is set to 115%, the actual flow would need to exceed 15% (3 gallons) of the expected flow. Therefore, the station would need to exceed 23 GPM before the controller would go into overflow alarm.
- **Underflow** – Can be set from 10% to 100% of Expected Flow. During system operation, if the actual station flow falls below the Underflow limit, the controller will shut the system down. For example, if the expected flow is 20 GPM and the underflow is set to 50%, the actual flow would need to underflow by 50% (10 gallons) of the expected flow. Therefore, the station would need to flow at a minimum of 10 GPM before the controller would go into an underflow alarm.
- **Start Delay** – Can be set from 5 seconds to 10 minutes. The Start Delay prevents premature system shutdown due to erratic flow within the mainline by providing a delay before the system shutdown occurs. It allows the system to stabilize prior to shutting the system down during Overflow and Underflow conditions.

After the station has been enabled, press the ▼ button to select any of the features mentioned above. With the ► cursor pointing to the flow characteristic, press the **+** / **–** button to increase or decrease the value until the desired number is reached.

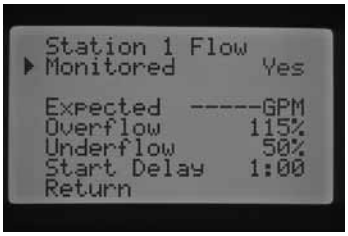

If flow monitoring is enabled for a specific station, the factory preset values will be displayed. The expected flow will be blank, because the actual learning process has not taken place. The learning process will be discussed in the Manual Operation, Learn Expected Flow section. Overflow will be 115%, underflow will be 50%, and the preset Start Delay will be set to 1 minute.

Flow Operation is necessary to program in order for the controller to know which stations to monitor. Important additional steps that need to be taken to complete the flow monitoring setup. A flow sensor needs to be assigned in the Sensor Configuration screen, and the stations set to be monitored need their flows to be learned. These steps are required in order for flow monitoring to occur.

If a station has been enabled for flow monitoring, it is important to know that the System Status Dashboard flow light will become active for that station. If the other components to complete the flow monitoring process have not been programmed, but the station's flow has been enabled, the System Status Flow light will light Green indicating a normal flow.

A detailed description of what happens in the case of an overflow or underflow is discussed in the controller Diagnostics and Troubleshooting section under System Status Dashboard, Flow. It is very important to read and understand this description before flow monitoring occurs.

Station Delay

This feature allows the user to insert a delay time between when one station turns off and the next station turns on. This is very helpful on systems with slow closing valves, or on pump systems that are operating near maximum flow or have slow well recovery. Different time delays between stations can be set according to each Program (from 1 second to 9 hours).

EXP: STATION DELAY FOR PROGRAM A 2 MINUTES

Turn the dial to the **ADVANCED FEATURES** position. Use the ▲ and ▼ buttons select Staion Delay and press the **+** button to enter the Station Delay screen. While in the Station Delay screen press the **+** / **–** button to increase or decrease the delay time between stations according to a Program. Use the **PRG** button to change between Programs A, B, C, or D.

No Water Window

This feature provides the user the ability to disable automatic watering during certain times of the day specific to a Program.

1. Turn the dial to the **ADVANCED FEATURES** position. Use the ▲ and ▼ to select **No Water Window** and use the **+** button to enter.
2. With the ► cursor next to Start, use the **+** / **–** button to set the start of the No Water Window.

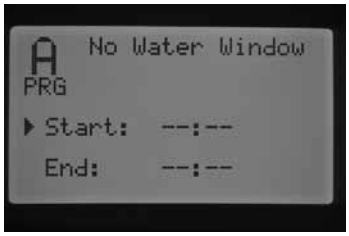

3. Use the ▼ button to select the End time.

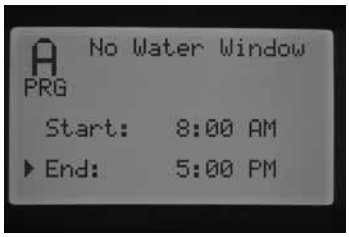

4. With the ► cursor next to End, use the **+** or **–** button to set the end of the No Water Window.

For example: if the No Water Window Start is set at 8:00 AM and the No Water Window End is set at 5:00 PM, the controller will not irrigate during the period of the day between 8:00 AM to 5:00 PM. Press the PRG button to change Programs to set a different No Water Window period for each program.

If an automatic Program or Manual Program overlaps and runs into a No Water Window period, the controller will Suspend the watering of the Program being run.

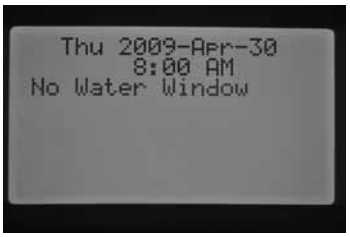

The program will continue to count down the run times associated with the program. If the No Water Window expires and the program is still counting down a run time, the controller will begin watering at that point in time. Once the program finishes and the display returns to the current date and time screen, a fault message will be displayed indicating irrigation has violated the No Water Window and which program was in violation.

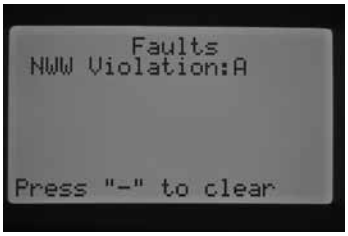

This message is displayed to make you aware that irrigation has been missed or Suspended and supplemental watering may be necessary to make up the missed irrigation that has occurred during the No Water Window. A manual single station that is activated remotely or at the controller will override the No Water Window and be allowed to water.

Firmware Info

This feature shows the revision of firmware loaded into the I-Core controller.

Easy Retrieve™ Memory

The Easy Retrieve feature allows you to save your preferred watering program and settings into memory for retrieval at a later time. This feature allows for a quick way of resetting the controller to the original programmed watering schedule if for some reason the programming was tampered with.

To save your watering program into memory:

1. Turn the dial to the **ADVANCED FEATURES** position. Use the ▲ and ▼ to select **Easy Retrieve Memory** and use the **+** button to enter.
2. Use the ▲ or ▼ buttons to place the ► cursor next to Save.

3. Press the **+** button once, then press and hold the **+** button to confirm that you want to save the current programming as the Easy Retrieve program. The display will ask you to please wait, and when the Easy Retrieve program has successfully been saved the display will indicate it is done.

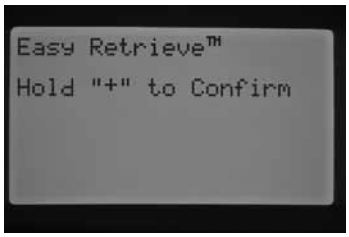

To restore the saved program:

1. Use the ▲ or ▼ buttons to place the ► cursor next to Restore.

2. Press the **+** button once, then press and hold the **+** button to confirm that you want to retrieve the restored Easy Retrieve programming. The display will ask you to please wait, and when the Easy Retrieve program has successfully been restored, the display will indicate it is done.

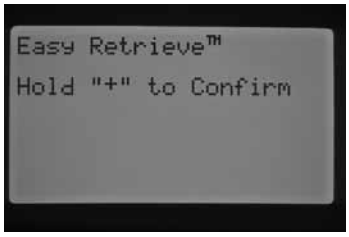

If you erase the controller's memory by using the Erase All feature found in Advanced Features, which will be discussed in a few sections, the controller will revert back to factory presets, and you will NOT be able to retrieve the Easy Retrieved saved programming. The Easy Retrieve program that was saved will be overwritten and lost.

Total Watering Time

The Total Watering Time feature displays the total run time of all stations in a particular Program. The total time shown is only a representation for each Start Time within the Program and not an accumulation of all the Start Times added together. The controller acknowledges which stations have a run time associated with each program, and adds all the station's run times together to equal the total run time or watering duration for that Program. Total Watering Time does not take into consideration any Cycle and Soak and Station Delay times that will occur during irrigation.

1. Turn the dial to the **ADVANCED FEATURES** position. Use the ▲ and ▼ to select **Total Watering Time** and use the **+** button to enter.
2. The total watering time will be displayed for the current program shown. Press the PRG button to display total watering time for other programs.

Erase All

The Erase All feature will erase all of the controller's memory and set everything back to factory presets. Once you perform an Erase All, all programming will be erased, including the Easy Retrieve saved programming. Erase All is usually performed when you would like to reprogram the controller from the beginning.

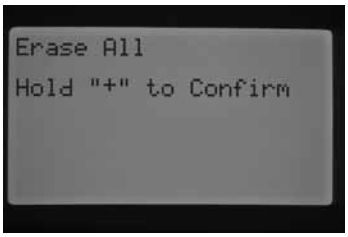

1. Turn the dial to the **ADVANCED FEATURES** position. Use the ▲ and ▼ to select **Erase All** and use the **+** button to enter.
2. Press and hold the **+** button to erase all memory from the controller.

The display will briefly inform you to please wait and then indicate when the reset is done.

LCD Adjust

The LCD Adjust feature allows you to increase or decrease the contrast of the display. This is helpful to make the display more visible in varying light conditions. You may adjust the contrast of the screen until you are able to read it effectively.

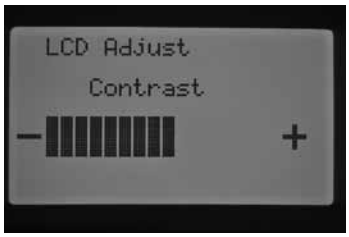

1. Turn the dial to the **ADVANCED FEATURES** position. Use the ▲ and ▼ buttons to select **LCD Adjust** and use the **+** button to enter.
2. Press the **+** button to increase the contrast or press the **–** button to decrease the contrast until your desired contrast level is achieved.

Flow Totalizer

The Flow Totalizer feature provides a running total of all the gallons or liters of water used. This is an accumulation of automatic programs, manuals, remote starts, and any other water that triggers the flow meter, including leaks in the system. Within the Flow Totalizer screen, you will be given two start points or references from which the flow calculations will be recorded. These reference points will be indicated as point A and point B. You may reset either reference point at any time. This is helpful if you would like to keep track of the gallons for the year and also for the month. At the beginning of the year you may reset point A, and the controller will start recording from that point in time. At the end of each month, record the total gallons used for point B and simply reset the reference point on B to start recording the gallons for a new month.

Turn the dial to the **ADVANCED FEATURES** position. Use the ▲ and ▼ buttons to select **Flow Totalizer** and use the **+** button to enter.

The ► cursor will be pointing to A when you initialize the Flow Totalizing screen. It will show the date of when the point of reference was started and also the running total of the gallons of water.

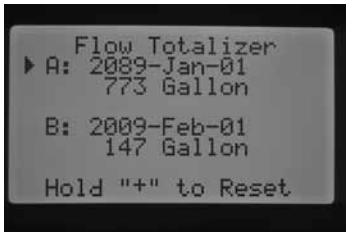

If you would like to reset this reference point, press and hold the **+** button while the ► cursor is pointing to A. The date will change to the current date, and the gallons will be set back to 0.

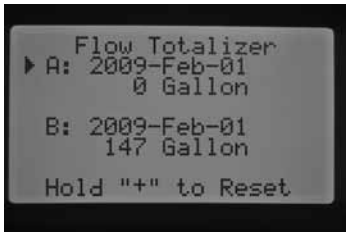

Use the ▼ button to select point B. The ► cursor will be displayed next to point B. To reset reference point B, press and hold the **+** button, the date will change to the current date and the gallons will be set back to 0.

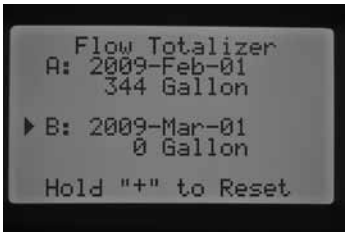

NOTE: The Flow Totalizer feature will not be reset if an Erase All is performed. This ensures that the flow data will not be lost during a reset of the controller.

Solar Sync Delay

I-Core with built in Solar Sync has the ability to delay the automatic, daily update of the seasonal adjustment value from Solar Sync for up to 99 days. This option may be an advantage to users who do not want the program run times to be adjusted by Solar Sync until after a set seeding or over watering period. The Solar Sync Delay function allows the controller to operate with a manually set seasonal adjustment value during the delay period so that programs assigned to the Solar Sync Seasonal Adjustment (see Seasonal Adjustment setting on pg. 17) will use this seasonal adjustment value until the delay period is over. Once the delay period is over, the programs assigned to Solar Sync will be adjusted based on the daily update from the Solar Sync weather data.

1. Turn the dial to the **ADVANCED FEATURES** dial position.
2. Use the ▲ and ▼ buttons to scroll to the **Solar Sync Delay** position. Press the **+** button to enter.
3. Use the **+** and **–** buttons to set number of days of delay. The default setting is 0 (no delay)
4. Use the ▲ and ▼ buttons to scroll to the **Seasonal Adjust During Delay** position. Use the **+** and **–** buttons to modify the Seasonal Adjust during delay (if desired) from the default setting of 100%.

PROGRAMMING SOLAR SYNC SETTINGS

The table will assist you in identifying the type of region you live in. There are four basic ET regions, each with descriptions of the region, along with typical ET and temperature characteristics. It is recommended that, if possible, the region be chosen based upon average July ET or peak summer ET (inches/mm per day).

Use the following table for choosing your region (reference below). You can use **A**, **B** or **C** to help you choose which region is best for your area:

A: Based upon the ET of your region using the **average** July ET or peak summer ET (inches/mm per day). This is the preferred option when selecting your region.

B: Based upon the temperature for your region using the **average** July or the driest month high temperature (not the highest temperature for July).

C: Based upon the general description of your region.

Programming Region & +/– Water Adjustment Setting

After the Solar Sync sensor is connected and assigned to the controller, the Region setting will need to be programmed.

1. Turn the dial to the **SOLAR SYNC SETTINGS** position. The number on the left of the screen is the **Region** setting, and the number on the right is the **+/– Water Adjustment settings**.

2. Set the Region (1, 2, 3, or 4) by using the **+** or **–** buttons. For accurate Solar Sync measurements, the **Region** needs to be programmed for the typical peak ET for your area. Use the table to determine your Region. (see the Solar Sync owner's manual for more details on Region)

3. Set the +/– Water Adjustment by using the ▶ button to move to the number on the right side of the screen. Use the **+** or **–** button to set the value any number between 1–10. The default setting is 5. It is recommended to leave the +/– Water Adjustment setting at the default 5 setting after install. Adjustments to this value can be made to alter the Solar Sync seasonal adjustment value if more/less is desired. (see the Solar Sync owner's manual for more details on using the +/– Water Adjustment)

IF ANY OF THE CHOICES IN THE ROWS APPLY TO YOUR SITUATION, THEN THAT IS YOUR REGION SETTING CHOICE.

	A	B	C
Region 1	If the average July ET is **< 0.17" (4.3 mm) per day**	If the average temperature for July is **65°–75° (18°C – 24°C)**	• **U.S. Northern States** • **Coastal Regions**
Region 2	If the average July ET is **0.18" – 0.23" (4.6 mm – 5.8 mm) per day**	If the average temperature for July is **75°– 85° (24°C – 29°C)**	• **Mountains** • **U.S. Northern Inland States**
Region 3	If the average July ET is **0.24" – 0.29" (6.1 mm – 7.4 mm) per day**	If the average temperature for July is **85° – 95° (29°C – 35°C)**	• **U.S. Southern States** • **Inland/High Desert**
Region 4	If the average July ET is **> 0.30" (7.6 mm) per day**	If the average temperature for July is **95° – 105° (35°C – 41°C)**	• **Deserts**

*** For Southern hemisphere locations, use the month of January.**

Clearing ET memory

1. Once the Solar Sync Sensor is installed the controller will begin collecting ET data. This ET data can be erased/cleared if desired.
2. Turn the dial to the **SOLAR SYNC SETTINGS** dial position.
3. Use the ▲ and ▼ buttons until the cursor is at **Clear ET History**.
4. Press the **+** button to. The following will be shown on the display, clear ET History and Press **+** to confirm.
5. Press and hold the **+** button to clear the ET history saved in the controller.

Check Sensor

This will allow the user to perform a communications check with the Solar Sync Sensor.

1. Turn the dial to the **SOLAR SYNC SETTINGS** dial position.
2. Use the ▲ or ▼ buttons until the cursor is at **Check Sensor**.
3. Press the **+** button. The controller will perform the communications check with the Sensor and show one of the following responses:
   a. Upgrade power module – the controller is using a power module that is not compatible with the built-in Solar Sync. Replace the Power module with one that is version 2.1 or later.
   b. Sensor OK – Solar Sync Sensor has been installed and is operating correctly
   c. Sensor failed – Solar Sync Sensor is not installed, not enabled, or is not operating correctly.

NOTE: The Solar Sync Sensor must be enabled for this function to work. If the Solar Sync Sensor has not been enabled, "Sensor Failed" will show on the display. To enable the Solar Sync Sensor, follow instructions in section "Sensor Configuration" for Solar Sync.

Assigning Solar Sync to programs

Once Solar Sync is installed it must be assigned to a program in order for that program's run times to be modified using the Solar Sync seasonal adjustment value. Even if no programs are assigned to Solar Sync seasonal adjustment, the controller will continue to collect the Solar Sync ET data. (See Set Seasonal Adjustment section under Solar Sync Adjust for details.)

Programming Solar Sync Delay

I-Core with built in Solar Sync has the ability to delay the automatic, daily update of the seasonal adjustment value from Solar Sync for up to 99 days. This option may be an advantage to users who do not want the program run times to be adjusted by Solar Sync until after a set seeding or over watering period. The Solar Sync Delay function allows the controller to operate with a manually set seasonal adjustment value during the delay period so that programs assigned to the Solar Sync Seasonal Adjustment (See Set Seasonal Adjustment on page 17) will use this seasonal adjustment value until the delay period is over. Once the delay period is over, the programs assigned to Solar Sync will be adjusted based on the daily update from the Solar Sync weather data.

1. Turn the dial to the **ADVANCED FEATURES** dial position.
2. Use the ▲ and ▼ buttons to scroll to the **Solar Sync Delay** position. Press the **+** button to enter.
3. Use the **+** and **–** buttons to set number of days of delay. The default setting is 0 (no delay)
4. Use the ▲ and ▼ buttons to scroll to the **Seasonal Adjust During Delay** position. Use the **+** and **–** buttons to modify the Seasonal Adjust during delay (if desired) from the default setting of 100%.

Programmable Rain Off

The Programmable Rain Off allows the user to set period of time in which the controller will be turned off, after which the system will automatically return to automatic irrigation. This is useful for halting irrigation when weather fronts or conditions are expected to persist for several days.

To set a Programmable Rain Off duration:

1. Turn the dial to the **OFF** position.

2. While the controller is in the **SYSTEM OFF** dial position, press the **+ / –** button. The controller will immediately go into the Remaining Days mode. Continue using the **+ / –** button until you reach the desired number of days you want the irrigation to be off before automatic irrigation will resume. You may select a Programmable Rain Off from 1 to 180 days.

3. Turn the dial back to the **RUN** position. The display at the RUN position will then show the number of days for the Programmable Off setting. This will count down each day at midnight, showing the remaining days until automatic irrigation will resume.

Remote commands will act the same in the Programmable Rain Off setting, as they do in the **SYSTEM OFF** dial position. Manual single station and manual program remote commands will activate the controller and run.

As soon as you turn the dial back to the **SYSTEM OFF** position the Programmable Rain Off will be erased, and you will have to reprogram the Remaining Days. It is important to leave the dial in the Run position to maintain the Programmable Rain Off setting.

One Touch Manual Start and Advance

This feature allows the user to start a manual program, similar to activating a Manual Program at the **MANUAL OPERATION** dial position, but without having to turn the dial. It will activate all the stations within the Program for the given programmed run time they were assigned.

With the dial in the **RUN** position, press and hold the ► button.

The controller will default to Program A. You can select Program B, C, or D by pressing the PRG button.

The stations run time will be flashing. Use the ◄ or ► buttons to select the station within the program you would like the manual to begin with, and use the **+ / –** button to select a different run time for the particular station number you have on the screen. Any stations following the first station activated will run for their automatic programmed run times.

After no more buttons are pressed, the controller will automatically begin watering. After the manual program begins, you may also use the ► button to scroll to a particular station or advance to a station more quickly.

Test Program Operation

The I-Core has a quick test program that will run all stations for a selectable period of time, in numerical order. The test is an easy way to walk through every station in the system to verify proper operation, or perform diagnostics. It also features a quick advance for stepping through stations with the ◄ or ► button.

1. With the dial in the **RUN** position, press and hold the PRG button for approximately three seconds.
2. The Test Program screen will appear with Station 1 and a flashing run time of 0:00.

3. Use the **+** button to increase the flashing test run time from 1 minute to 15 minutes. Each station will run for this selected run time.
4. Press the ► button to select which station the Test program will begin with.
5. The Test program will begin running in 3 seconds if no further buttons are pressed.
6. Once the Test program is running, the stations can be advanced or reversed without waiting for the run times to complete. Press the ► button to step up one station immediately. Press the ◄ button to back up one station and this will restart the previous station with a new Test run time.

Complete Flow Monitoring Procedure

This is a complete step by step procedure to set up and initialize flow monitoring for the I-Core controller. There are multiple programming steps that need to be completed in order for the monitoring of station's flows to occur. It is important to complete all of the steps for accurate flow monitoring.

1. Before any flow programming takes place, you must have programmed automatic station run times under **Set Station Run times** for the stations you would like to learn flow. The learning process will not occur until station run times are programmed, as the controller does not recognize the station until it has a programmed runtime.
2. Turn the dial to **ADVANCED FEATURES**. Use the ▼ button to move the ► cursor next to Sensor Configuration, press the **+** button.
3. Use the **+ / –** button until the correct HFS FCT size is displayed. A list of sizes and descriptions can be found in the Set Configuration section in Advanced Features. Enter the HFS FCT size for SEN1 or SEN2 according to which sensor terminals you have the flow sensor wired. If you are installing two flow sensors, both SEN1 and SEN2 will have to be programmed for each flow sensor.

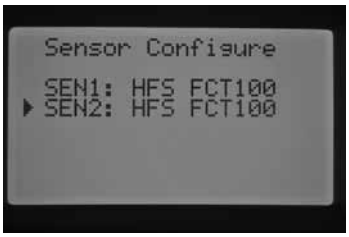

4. For non-Hunter flow sensors, Custom 1, Custom 2, or Custom 3 (Metal Version I-Core) can be selected as a flow sensor type. With custom selected, press the ► button to program the K-Factor and Offset that is specific to that sensor, specified by the flow sensor manufacturer.

5. Use the ▲or ▼ buttons and the ◄ or ► buttons to navigate through the Custom, K-Factor, and Offset screen. Once you navigate to a particular number and it starts flashing, the number may be changed, press the **+ / –** button to either increase or decrease the value. Once you have completed entering the K-Factor and Offset specified by the manufacturer of the flow sensor, use the ▼ button to return to the main Sensor Configuration screen.

6. Use the ◄ button to return to the **Advanced Features** main screen, or move the dial from **ADVANCED FEATURES** and simply return the dial back to Advanced Features. Use the ▼ button to move the ► cursor next to Flow Operation, press the **+** button.

7. The display will show Station 1 Flow Monitored and a flashing NO. A selection of NO will indicate that this station's flow will NOT be monitored. Press the **+** button, and the value will change to YES. This selection will allow for this station's flow to be monitored. If flow monitoring is enabled (Yes), a new screen will appear with important characteristics of each stations monitored flow. Use the ◄ or ► buttons to scroll through the station numbers and assign YES or NO for the stations flow monitoring.

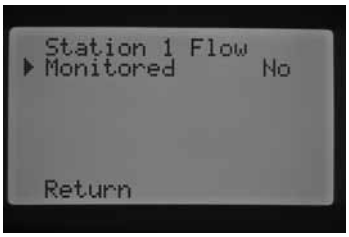

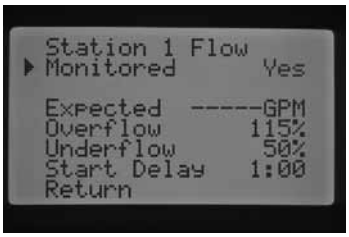

8. Turn the dial to **MANUAL OPERATION**. Use the ▼ button to move the ► cursor next to **Learn Expected Flow**, press the **+** button.

9. If you would like to learn the flow for All Stations, simply turn the dial to RUN. The controller will learn all the stations that have been programmed for their flows to be monitored, and have programmed run times. The learning process will actually activate each station automatically, operating each station approximately one minute to learn the flow rate. Once all the stations have been learned, the controller will return to its automatic programming and flow monitoring will be active.

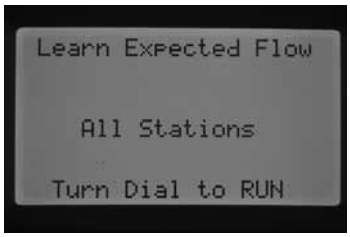

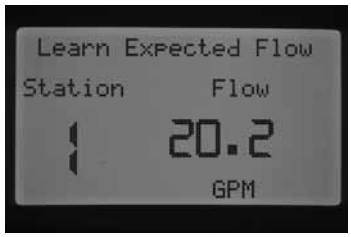

The Learn Expected Flow display will also indicate if there is a problem with any programming. If station run times were not programmed in the **Set Station Run Times** screen, the controller will display **No Runtime** in the **Learn Expected Flow** screen.

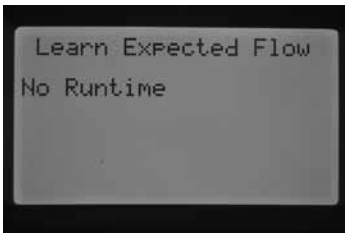

If no stations were set to have their flows monitored in the Flow Operation section of Advanced Features, the controller will display **No Flow Station** as well as **No Runtime** in the **Learn Expected Flow** screen.

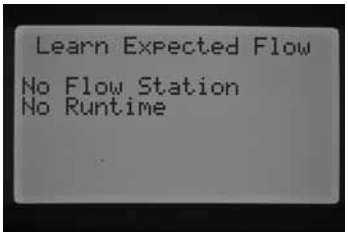

If no HFS FCT size was programmed in the Sensor Configuration section of Advanced Features, the controller will display **No Flow Sensor** in the **Learn Expected Flow** screen.

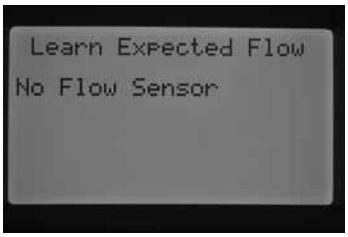

Once flow monitoring has been established, the rules that apply to an overflow or underflow condition are very important to understand. There is a diagnostic testing procedure the controller will activate to determine if there is an overflow or underflow condition. A complete description of the process is explained in the Controller Diagnostics and Troubleshooting section under System Status Dashboard, Flow. It is important to read this section in order to understand the flow monitoring process.

System Status Dashboard

The System Status Dashboard is a quick reference indicator that uses LED lights to provide system status information regarding sensor status, valve operation, and flow monitoring.

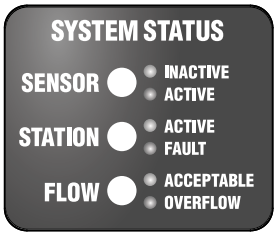

Sensor Status

The Sensor System Status lights indicate if a sensor is Inactivate (closed state) or Active (open state). If the controller senses on either the SEN1 or SEN2 terminals an Active condition, a RED light will be displayed. A message will also be displayed indicating which sensor is Active.

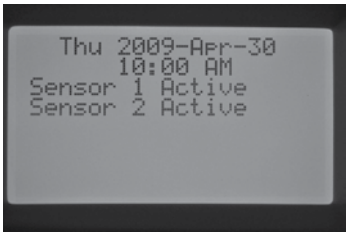

If a station has been programmed to acknowledge the sensor in the **SET SENSOR OPERATION** dial position, the controller will suspend the watering of those stations.

If the controller senses closed circuits across the sensor terminals, the Sensor status light will be GREEN, indicating an Inactive sensor. All programmable watering schedules will proceed as normal.

If no sensors are connected to the controller, as long as the jumper wires remain connected to their respective sensor terminals, the Sensor Status light will always be green.

If the Rain Sensor Bypass switch is moved to the Bypass position, the controller will no longer light up the Sensor Status Dashboard light. Any Clik type sensor that is connected to the controller will be ignored, and watering will resume as normal.

Station Status

The Station System Status light monitors and indicates whether a station is operating normally or if an overcurrent condition for a particular station has occurred. The overcurrent condition indicates that either too many solenoids are connected or the field wiring or solenoid has a problem, causing an unacceptably high level of current.

Any time a station is activated and is operating satisfactorily the Station Status Light will be GREEN. If the controller senses an overcurrent for a particular station, the Station Status Light will begin to flash RED. If you observe the Station Status Light flashing RED, the display will provide a fault message.

The number displayed next to the word Fault is the actual station number that the overcurrent condition occurred. Simply press the **–** button to dismiss the Fault message, and reset the Station Status light. Further troubleshooting will be required to correct the issue causing the station fault(s).

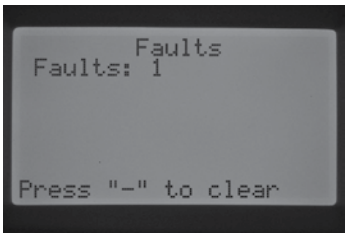

Flow Status

The Flow System Status light identifies whether a station has an acceptable flow or whether overflow condition is occurring. A station's flow monitoring MUST be set to YES in the Flow Operation section of Advanced Features before the Flow System Status light will acknowledge acceptable flow of the station. Once this has been established, the Sensor light will light GREEN for an acceptable flow, or a flashing RED for an overflow or underflow condition.

If the I-Core senses an overflow or underflow condition after the Start Delay has elapsed, the Sensor Status Light will turn solid RED, and the controller will go into diagnostic testing to determine if the station has an overflow or underflow condition.

The controller will shut down the station and put it into pause mode for approximately one minute to allow for erratic flow to settle.

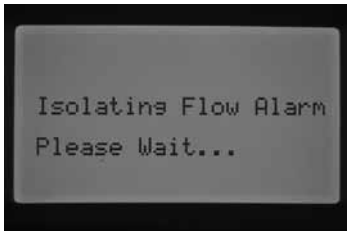

Once a minute has passed, the controller will again activate the station (the display will still indicate that it is Isolating the Flow Alarm). After the Start Up delay has elapsed, if the station flow resembles the learned flow, the controller will continue to run the station for the given programmed run time, and the Sensor Status Light will change to GREEN. If the station flow does not correct itself and an overflow or underflow condition persists after running the station for a second time for the programmed Start Delay, the controller will shutdown the station and the station will not restart. The Flow Status light will then flash RED, and the controller will display an overflow message and indicate which station number.

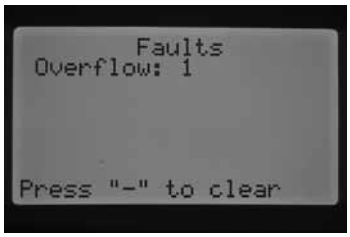

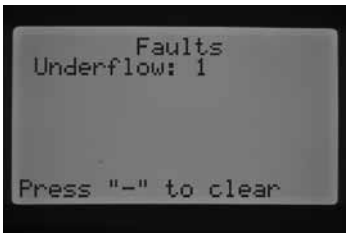

If a flow sensor is selected, stations are set to be monitored, and their flow has been learned, the controller will light the Flow Status light GREEN anytime an acceptable flow is monitored. A flashing RED light indicates an unacceptable flow is occurring.

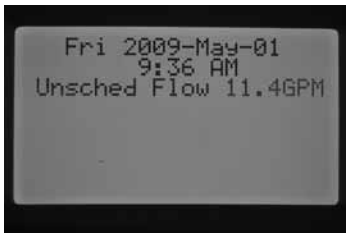

Stations that are set to NOT monitored will be displayed by the Flow Status Light differently. A station set to be NOT monitored will NOT activate the Flow Status light and turn it GREEN when the station starts running. However, after five minutes of the station running, the controller will acknowledge that there is flow, and the Flow Status light will light solid RED, indicating an unscheduled flow.

A station not monitored will not be shut down. The controller will detect the flow and determine it as a unscheduled flow.

NOTE: The I-Core controller has the ability to run two programs at the same time, which may allow for the possibility of one station to run whose flow is set to be monitored and a second station to run concurrently whose flow is set to be NOT monitored. In the rare instance that this occurs, the controller will not be able to differentiate which stations flow the sensor should be monitoring, and will cause the controller to detect an overflow condition.

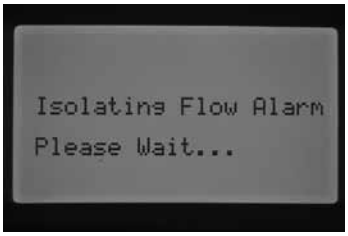

The I-Core can activate stations simultaneously. After the Start Delay elapses for the flow monitored station, if the controller detects overflow, it will initiate a diagnostic testing procedure. The display will read **Isolating Flow Alarm, Please Wait...**

The I-Core will shut down all stations for one minute and allow the water to settle in the irrigation lines. After the one minute passes the controller will reactivate a station whose flow is being monitored for the programmed Start Delay time. The controller will acknowledge the flow and determine if it is acceptable or not. If the flow is acceptable for the monitored station, the controller will again activate the station whose flow is NOT monitored after the Start Delay has elapsed. Once this second station whose flow is NOT monitored activates, the controller will again sense an overflow and begin the diagnostic testing again. This will be a repeating process until the station run time's elapse or do not coincide with each other due to different run times.

If during the diagnostic testing the controller determines that the station's flow, which should be monitored, is in an overflow or underflow condition, the controller will shut down the station and not allow it to restart. The station, whose flow is NOT monitored, will continue to run for its programmed run time.

HUNTER QUICK CHECK™

The Hunter Quick Check is an efficient and effective way to diagnose problems in the field. Instead of having to physically check each field wiring circuit for potential problems, the user can run the Hunter Quick Check circuit test procedure. This circuit diagnostic procedure is very beneficial to quickly identify “shorts” commonly caused by faulty solenoids or when a bare common wire touches a bare station control wire.

To initiate Hunter Quick Check: With the dial in the **RUN** position, press and hold the **+**, **–**, ◄ or ► buttons for approximately two seconds and then release.

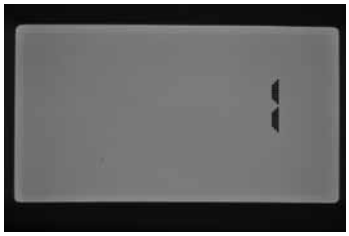

After a few seconds, the display will show a number 1. Press the **+** button.

The screen will initially show a number 20 and within one second, the Hunter Quick check will begin.

The controller will begin searching all stations in an effort to detect a high current path through the station terminals. If a field wiring short is detected on a station, the controller will display a fault message for each faulty station.

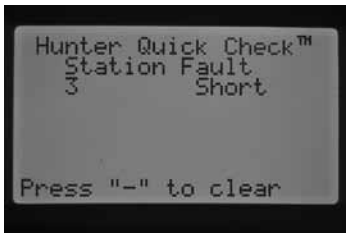

TROUBLESHOOTING

Problem	Causes	Solutions
No display.	Check AC power to controller. 14-Pin connector is not fully connected. Module locking bar is in the Power Off position.	Fix power supply. Connect ribbon cable on back of facepack door. Slide the module locking bar into the Power On position.
The display reads **NO A/C Power**. 	No AC power present to operate controller/valves.	Check to see if the transformer is properly installed or power is coming out of it.
Display reads **Fault** (OVERFLOW OR UNDERFLOW). 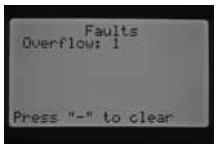 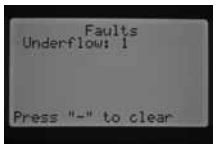	Overflow/Underflow alarm has occurred.	Check system for problems.
Possible station short. 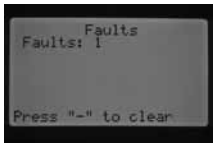		Check solenoid and field wiring.
Display reads sensor is active. 	The rain sensor is interrupting irrigation or not installed.	Slide the Rain Sensor switch on front panel to the bypass position to bypass rain sensor. Check to make sure the jumper wire is connecting the sensor terminals if no rain sensor is being used.
Station does not irrigate.	Field wiring or solenoid problem.	Perform Manual Single–Station start and observe display and Station Status light. If Station Status light is RED, check solenoid and filed wiring, including COM wires. Station outputs must not exceed 0.56A Max.
The controller does not irrigate automatically.	Possible programming errors. Sensor shutdown. Programmable Off in effect. Time/Date errors.	Verify all programs Days to water, start Times, and Station Run Times. Check display for fault indication. Check display for OFF days. Verify controller time and date, including AM/PM/24 settings.

TROUBLESHOOTING

Problem	Causes	Solutions
Rain or other Clik sensor does not shut down system.	Incorrect sensor type or connection (Jumper installed). Incorrect sensor settings for stations.	Use one normally-closed Clik-type sensor per sensor ports. Verify that one wire from each sensor is to each SEN1 or SEN2 terminals. Remove Jumper wire. Turn dial to **SET SENSOR OPERATION** and verify correct response for each station to the sensor.
The controller repeats a program or continuously waters even when it should not be on / controller cycles over and over.	Too many start times (user programming error).	Only one start time per active Program is required. Refer to "Set Program Start Time" instructions.
Controller does not recognize output module (station size shown is incorrect).	Module seated incorrectly. Module slot skipped. Station output module overloaded.	Verify that modules are seated all the way back in the wiring compartment and module lock is ON. Verify that no module slots have been skipped from left to right. Swap with known good module in the same position. If new module works in the position, replace the old module. If new known good module also fails to be recognized, check gold contacts for dirt, corrosion, or pests.
Solar Sync Adjusting too low	Solar Sync Setting need to be adjusted	Make sure controller dial is in the **RUN** position. Increase the value on the Water Adjustment scale (10 is max). Once the setting is changed, the controller will immediately be updated with the new Seasonal Adjust %. Increase the Water Adjustment setting until the desired Seasonal Adjust % is shown. **If you max out the Water Adjustment scale at 10 and still require more Seasonal Adjust, move down to the next lower Region (from Region 4 to 3, for example)**.
Solar Sync Adjusting too high	Solar Sync Setting need to be adjusted	Make sure controller dial is in the **RUN** position. Decrease the value on the Water Adjustment scale (default setting is 5). Once the setting is changed, the controller will immediately be updated with the new Seasonal Adjust %. Decrease the Water Adjustment setting until the desired Seasonal Adjust % is shown. **If you minimize the Water Adjustment scale down to 1 and still require a reduction in Seasonal Adjust, move up the next Region (from Region 2 to 3, for example)**.

I-CORE: INSTITUTIONAL/COMMERCIAL CONTROLLER (IC-600PL & IC601PL) – PLASTIC CABINET

Item	Description		Catalog No.
1	Front Panel		124705
2	Knob		129300
3	Rear Cabinet		117805
4	Door Without Lock, Plastic I-Core		131305
5	Lock & Key Set		387300
6	Key Set (2)		122516
7	6-Station Expansion Module		ICM600
8	48 Station DUAL Module		DUAL48M
9	Transformer		154628
10	Junction Box		123800
11	Junction Box Cover		124000
12	Smart Port Wiring Harness 25' Shielded Cable		SRR-SCWH
	Power Module		121405
	Ribbon Cable, Plastic I-Core		130800
	I-Core Mounting Template		LIT-548
	Hanging Door Card	English	LIT-506
	Owners Manual	English	LIT-502
	International Kit *(Includes Owners Manual)*	Spanish	INT-895
		French	INT-894
		Italian	INT-896
		German	INT-898
		Portuguese	INT-897

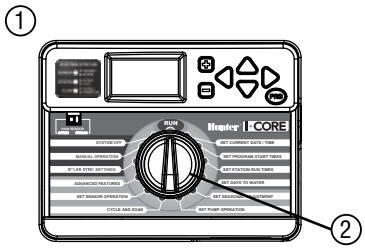

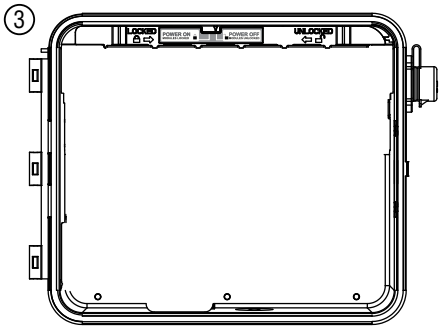

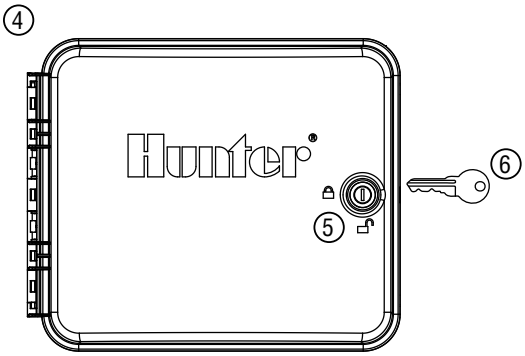

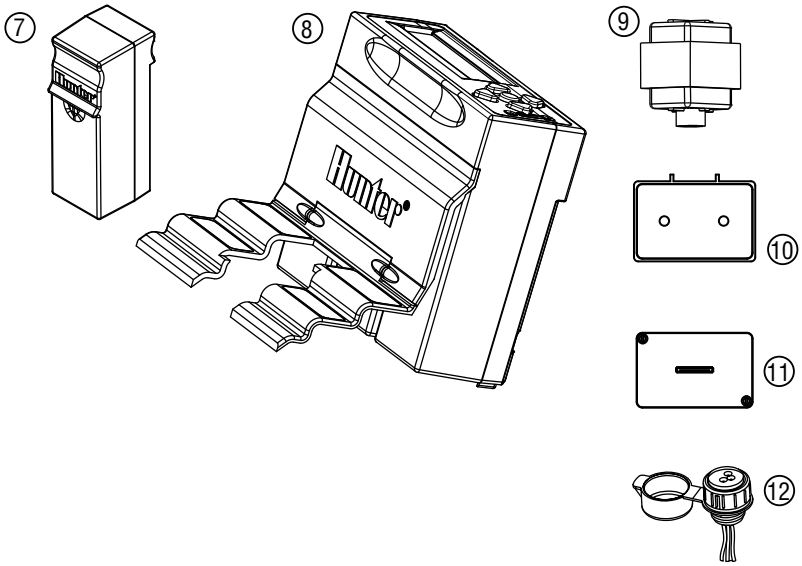

I-CORE: INSTITUTIONAL/COMMERCIAL CONTROLLER (IC-800M & IC-800SS) – METAL CABINET

Item	Description		Catalog No.
1	Front Panel		124705
2	Knob		129300
3	Door Without Lock, Metal I-Core		125500
4	Lock & Key set		387300
5	Key Set (2)		122516
6	Rear Cabinet		118700
7	6 Station Expansion Module		ICM600
8	48 Station DUAL Module		DUAL48M
9	Transformer		154628
10	Junction Box		123800
11	Junction Box Cover		124000
12	Smart Port Wiring Harness 25' Shielded Cable		SRR-SCWH
	Power Module		121405
	Ribbon Cable, Metal/Stainless I-Core		130810
	I-Core Mounting Template		LIT-548
	Hanging Door Card	English	LIT-506
	Owners Manual	English	LIT-502
	International Kit *(Includes Owners Manual)*	Spanish	INT-895
		French	INT-894
		Italian	INT-896
		German	INT-898
		Portuguese	INT-897

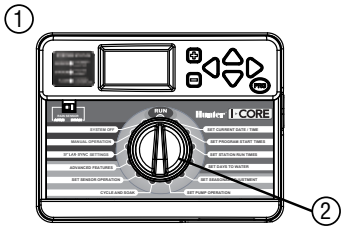

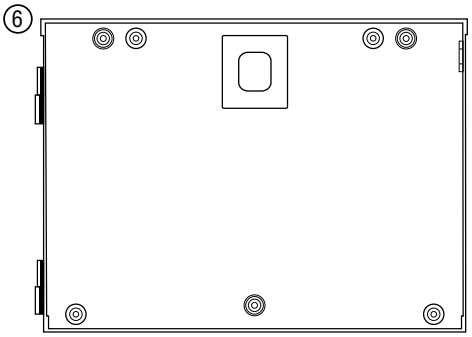

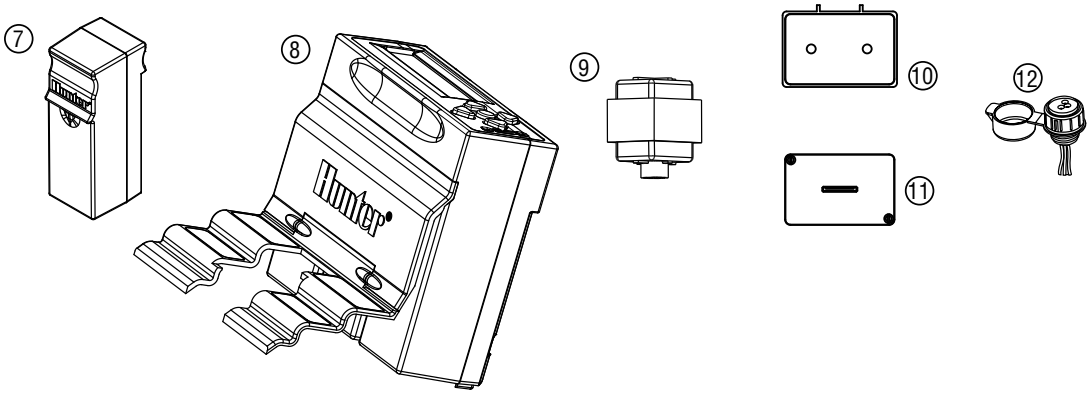

I-CORE PLASTIC PEDESTAL

Item	Description		Catalog No.
1	I-Core Front Panel		12475
2	Lid		552200
3	Hinge Pin		558400
4	Access Door		553200
5	Lock & Key Set		558800
6	Key Set (2)		122516
7	SmartPort Bracket		576000
8	Mounting Template		558600
9	Mounting Hardware		420200
10	Smart Port Wiring Harness 25' Shielded Cable		SRR-SCWH
	Ribbon Cable - Plastic Ped I-Core		130815
	Mounting Kit		581700
	Owners Manual	English	LIT-502
	International Kit *(Includes Owners Manual)*	Spanish	INT-895
		French	INT-894
		Italian	INT-896
		German	INT-898
		Portuguese	INT-897

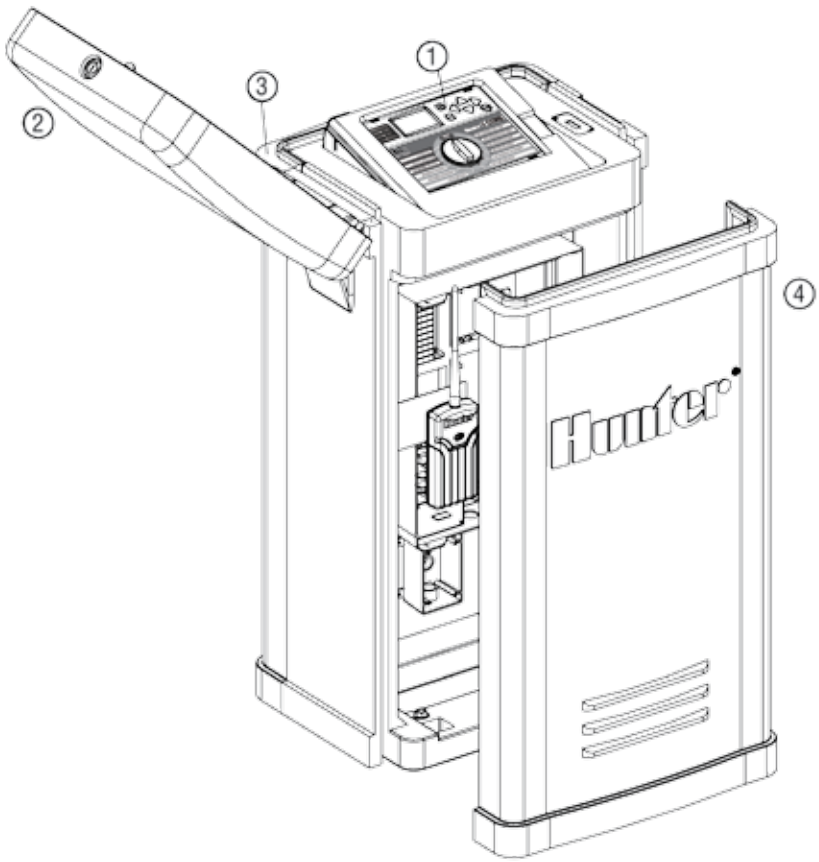

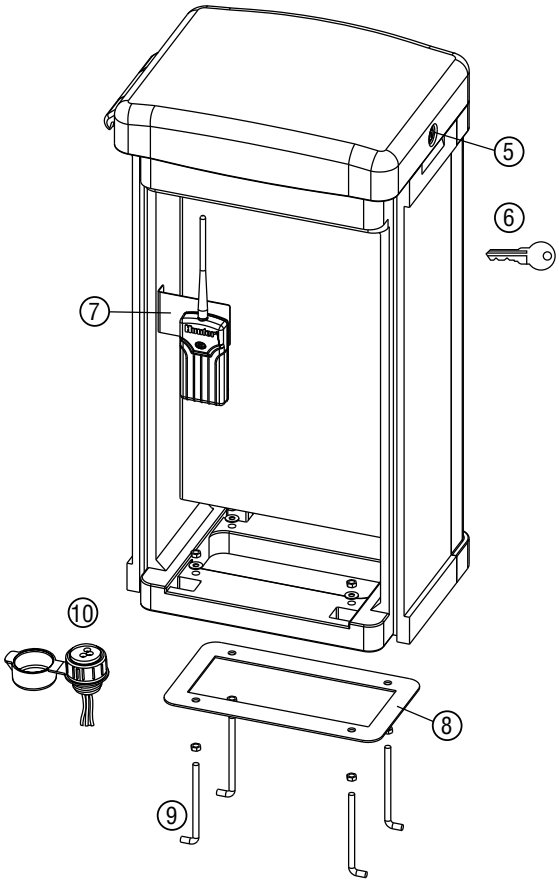

SPECIFICATIONS

Operating Specifications

- Station Run Time: 1 minute to 12 hours (in 1-minute increments) on programs A, B, C, D.
- Start Times: 8 per day, per program (A, B, C), 16 per day (D), for up to 40 daily starts.
- Watering Schedule: 7-day calendar, interval watering up to a 31-day interval or true odd or even day programming, made possible by the 365-day clock/calendar.

Electrical Specifications

- Transformer Input: 120 VAC, 60Hz (230 VAC, 50/60 Hz International Use)
- Transformer Output: 25 VAC, 1.5 amp
- Station Output: 24VAC, 0.56 amps per station
- Maximum Output: 24VAC, 1.4 amps (includes Master Valve Circuit)
- Battery Backup: 9-volt alkaline battery (not included) used only for time keeping during power outages, the nonvolatile memory maintains program information.

Dimensions

- **Plastic Cabinet**
  Height: 11" (28 cm)
  Width: 12" (30.5 cm)
  Depth: 3¾" (9.5 cm)
- **Metal/Stainless Cabinet**
  Height: 15¾" (40 cm)
  Width: 11 3/8" (29 cm)
  Depth: 4½" (11.4 cm)
- **Plastic Pedestal**
  Height: 38" (96 cm)
  Width: 20 ½" (52 cm)
  Depth: 15" (38 cm)

Default Settings

All stations are set to zero run time. This controller has a non-volatile memory that retains all entered program data even during power outages, without need for a battery.

FCC NOTICE

This controller generates radio frequency energy and may cause interference to radio and television reception. It has been type tested and found to comply with the limits for a Class B computing device in accordance with the specifications in Subpart J of Part 15 of FCC Rules, which are designed to provide reasonable protection against such interference in a residential installation. However, there is no guarantee that interference will not occur in a particular installation. If this equipment does cause interference to radio or television reception, which can be determined by turning the equipment off and on, the user is encouraged to try to correct the interference by one or more of the following measures:

- Reorient the receiving antenna.
- Move the controller away from the receiver.
- Plug the controller into a different outlet so that controller and receiver are on different branch circuits.

If necessary, the user should consult the dealer or an experienced radio/television technician for additional suggestions. The user may find the following booklet prepared by the Federal Communications Commission helpful: "How to Identify and Resolve Radio-TV Interference Problems." This booklet is available from the U.S. Government Printing Office, Washington, D.C., Stock No. 004-000-00345-4 (price – $2.00 postpaid).

NOTES

Hunter Industries Incorporated • The Irrigation Innovators
1940 Diamond Street • San Marcos, California 92078 USA
www.hunterindustries.com

© 2011 Hunter Industries Incorporated
LIT-502 A 3/11

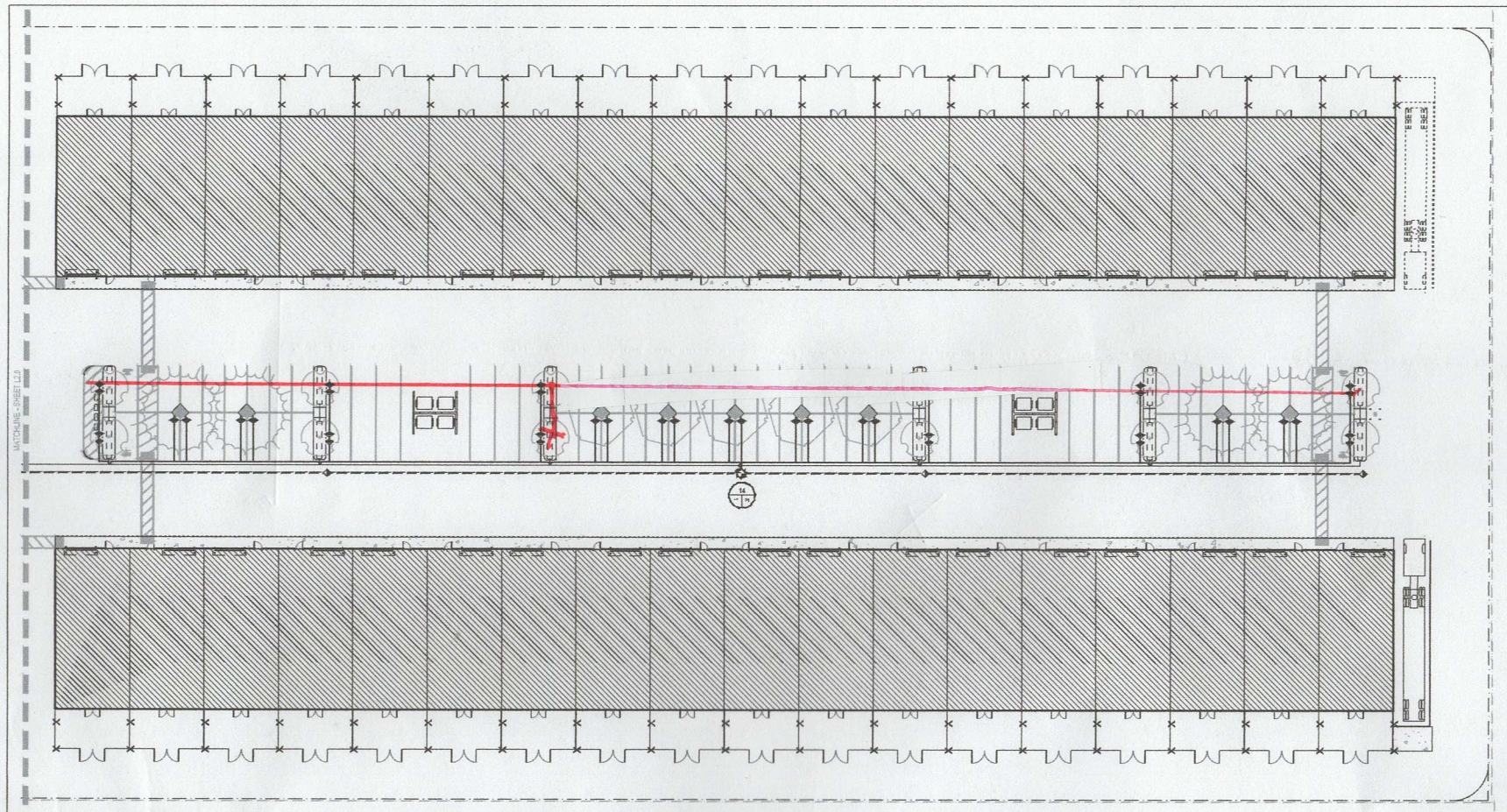

IRRIGATION LEGEND

SYM.	MFR.	DESCRIPTION	MODEL	RATE	NOTES
	WILKINS	REDUCED PRESSURE BACKFLOW PREVENTER	1", 825Y		
	HUNTER	3/4" QUICK COUPLER	HQ-33RC		
	MATCO	BRASS / BRONZE SHUTOFF	LINE SIZE		
C	HUNTER	I-CORE OUTDOOR PEDESTAL IRRIGATION CONTROLLER , 6 STA W/ SOLAR SYNC	IC600M W/ (2) ICM-600, ACC-PED & WSS-SEN		
F	HUNTER	1.5" FLOW SENSOR	HFS W/ FTC-150		
M	HUNTER	1.5" MASTER VALVE	ICV-151G		
	HUNTER	PGV REMOTE CONTROL IRRIGATION VALVE	0-20 GPM = 1" ; PGV-101G 20 - 40 GPM = ; 1.5": PGV-151G		
	HUNTER	DRIP ZONE REMOTE CONTROL IRRIGATION VALVE	1": ICV101G W/ HY-100		
	HUNTER	MULTISTREAN BUBBLER NOZZLE W/ 6" POP-UP W/ CHECK VALVE	MSBN-500/H PROS-06-CV	.50 GPM	
- - - - -	HUNTER	HLD DRIPLINE	HLD-09-12, SPC @ 12"-24" O.C. BURY DRIPLINE 2" UNDER FINISH GRADE. LIGHTLY COMPACT TOP SOIL BEFORE INSTALLING TOP DRESS	0.9 GPH	
	HUNTER	DRIP AIR RELIEF VALVE			
	HUNTER	DRIP FLUSH VALVE			
————		MAINLINE	SCH 40 PVC (2") MIN. UNLESS OTHERWISE NOTED		
————		LATERALS	CL200 PVC (3/4") MIN. UNLESS OTHERWISE NOTED		
(NOT SHOWN)		SLEEVING	SCH 40 PVC , MIN SIZE 2X PIPE DIA		

X-X — CONTROLLER & VALVE ID
0 — GALLONS PER MINUTE
0 — VALVE SIZE

NOTES:

DESIGN STATIC PRESSURE AT POINT OF CONNECTION - 45 PSI
*IF UPON COMPLETION OF MAINLINE PSI TEST PSI IS BELOW 45 PSI CONTACT RIVERSIDE LANDSCAPE. DO NOT PROCEED WITH INSTALLATION OF IRRIGATION SYSTEM IF PRESSURE TEST DOES NOT YIELD THE MINIMUM REQUIREMENTS AS SPECIFIED ON THE PLANS.

PIPING IS SHOWN DIAGRAMMATICALLY FOR DRAWING CLARITY. PLACE ALL LATERALS 24" BEHIND ALL CURBS AND WALK.

ALL SPRAY HEADS TO BE PLACED MIN 24" FROM BACK OF CURB, SIDEWALK OR ANY NON-PERMEABLE SURFACE IN PUBLIC ACCESS AREAS.

I HAVE COMPLIED WITH THE CRITERIA OF THE WATER EFFICIENT LANDSCAPE REQUIREMENTS ORDINANCE AND APPLIED THEM FOR THE EFFICIENT USE OF WATER IN THE IRRIGATION DESIGN AND PLANTING DESIGN PLAN

SIGNATURE LIC NO DATE

Riverside

SCALE: 1"=30'
30' 0 30'

NORTH

UNDERGROUND SERVICE ALERT of Northern California Call: TOLL FREE 1-800-227-2600 TWO WORKING DAYS BEFORE YOU DIG

DBKO DESIGN + BUILD

WHSE PARTNERS

DATE	REVISION	BY

SEAL

LICENSED LANDSCAPE ARCHITECT — MARK STEVEN BRAUN — LICENSE NO. 4415 — 15 DEC 2021 — STATE OF CALIFORNIA

ANY INFORMATION OR DATA ON THIS DRAWING IS NOT INTENDED TO BE SUITABLE FOR REUSE BY ANY PERSON, FIRM, CORPORATION, OR ANY OTHER OR EXTENSIONS OF THIS PROJECT OR FOR ANY USE ON OTHER PROJECTS WITHOUT WRITTEN AUTHORIZATION AND ADAPTATION BY THE LANDSCAPE ARCHITECT ENGINEER, FOR THE SPECIFIC PURPOSE INTENDED WILL BE AT THE USER'S SOLE RISK AND WITHOUT LIABILITY OR LEGAL EXPOSURE TO THE ENGINEER.

IRRIGATION PLAN

LEASE FLEX. / WAREHOUSE BUILDINGS
FOR
MADERA INDUSTRIAL WHSE, LLC
S. SCHNOOR AVENUE, MADERA, CA

JOB NUMBER	21107
DESIGNED BY	MH
DRAWN BY	EZ
DATE	12/14/21
SHEET NUMBER	L2.1

Lic#995991

3728 W. Ashcroft, Fresno, Ca, 93722

Ph#559-281-3226

Fax# 559-243-7080

WARRANTY – GUARANTEE

Project: **S. Schnorr Ave., Madera, CA 93637**
Subcontract number: ***22002-56013***

We hereby warrant and guarantee the **sliding glass doors, fixed picture windows, exterior storefront system door** which we have performed at the job located at S. Schnorr Ave., Madera, CA 93637 one (1) year from Date of Final Completion and Owner Acceptance.

We agree to repair or replace, to the satisfaction of the Owner, any and all work that may prove defective in workmanship or materials within that period. Ordinary wear and tear, and unusual abuse or neglect excepted, together with any work which may be damaged or displaced in so doing.

Any repairs or replacement shall bear an additional one (1) year guarantee as herein stated, dated from the final acceptance of repairs or replacement.

In the event of our failure to comply with the above-mentioned conditions, within a reasonable time after being notified in writing, we collectively and separately do hereby authorize the Owner to proceed to have defects repaired and made good at our expense and will pay all costs and charges therefore immediately upon demand.

MCS Glass, Inc.
Company Name

3728 W. Ashcroft Ave, Fresno , Ca, 93722
Address

995991
License Number

Signature

Marius D. Foanene
Print Name

President
Print Title

04/24/2023
Date

SUBCONTRACTOR WARRANTY FORM

PROJECT: Madera, WHSE

LOCATION: S. Schnorr Ave., Madera, CA 93637

OWNER: Madera Industrial WHSE, LLC

GENERAL CONTRACTOR: DBKO Designs

We, MCS Glass, Subcontractor for DBKO Designs, do hereby warrant that all labor and materials furnished and work performed in conjunction with the above referenced project are in accordance with the Contract Documents and authorized modifications thereto, and will be free from defects due to defective materials or workmanship for a period of 1-ONE year(s) from the Date of Substantial Completion.

Should any defect develop during the warranty period due to improper materials, workmanship or arrangement, the defect, including adjacent work displaced, shall be made good by the undersigned at no expense to the Owner.

The Owner will give Subcontractor written notice of defective work. Should Subcontractor fail to correct defective work within 60 days after receiving written notice, the Owner may, at his option, correct defects and charge Subcontractor costs for such correction. Subcontractor agrees to pay such charges upon demand.

FOR: MCS Glass

BY: Cristina Fomene

TITLE: Director of Operations

DATE: 4/24/2023

AMERICAN ARCHITECTURAL

AAMA 609 & 610-02

Cleaning and Maintenance Guide for Architecturally Finished Aluminum

MANUFACTURERS ASSOCIATION

TABLE OF CONTENTS

1.0 Scope....1

2.0 Purpose....1

3.0 General....1

4.0 Cleaning Procedures And Care After Installation....1

4.1 Removal Of Light Surface Soil On Organic And Anodic Coatings....2

4.2 Removal Of Medium To Heavy Surface Soil On Anodic Coatings....2

4.3 Removal Of Medium To Heavy Surface Soil On Organic Coatings....3

4.4 Inspection....3

5.0 Cleaning Precautions....3

AAMA. The Source of Performance Standards, Product Certification and Educational Programs for the Fenestration Industry.

This voluntary specification was developed by representative members of AAMA as advisory information and published as a public service. AAMA disclaims all liability for the use, application or adaptation of materials published herein.

©2002

American Architectural Manufacturers Association
1827 Walden Office Square, Suite 550, Schaumburg, IL 60173
PHONE 847/303-5664 FAX 847/303-5774
EMAIL webmaster@aamanet.org WEBSITE www.aamanet.org

All AAMA documents may be ordered at our web site in the "Publications Store".

Publish Date: 1/2002

1. SCOPE

1.1 This guide outlines methods, equipment and materials applicable for cleaning architecturally finished aluminum after construction and for subsequent periodic maintenance.

1.2 The methods outlined herein are intended for use on anodized or painted architectural products whether rolled or extruded shapes, including window and door frames, store fronts and entrances, curtain walls, mullions, columns, panels, hand rails, flag poles and hardware.

1.3 Types of architectural finishes are: anodic coatings, thermoplastic and thermosetting organic coatings.

2. PURPOSE

This information is intended as a guide for architects, owners, building managers, contractors and others in the building industry who are interested in the proper care and maintenance of finished architectural aluminum. Herein are described safe, practical methods for cleaning, maintenance and protection of finished architectural aluminum.

3. GENERAL

3.1 Anodized Aluminum: As with any finished building material, anodized aluminum requires reasonable care prior to and during installation and periodic cleaning and maintenance after installation. Although anodized aluminum possesses exceptional resistance to corrosion, discoloration and wear, its natural beauty can be marred by harsh chemicals, rough conditions or neglect. Such conditions usually affect only the surface finish and do not reduce the service life of the aluminum. However, the marks resulting from such mistreatment may be permanent. For example, mortar, cement and other alkaline materials will quickly corrode anodic coatings if allowed to dry on the metal surface.

3.2 Painted Aluminum: Organic coatings on aluminum do not normally show an appreciable amount of dirt collection. In many atmospheres dirt or soil would not indicate a detrimental risk to the coating, but cleaning and surface care may be desirable for the sake of appearance. Cleaning may become desirable in areas where heavy industrial deposits have dulled the surface, where materials from construction processes have soiled the surface or where cleaner run-down from other surfaces should be removed.

3.3 Both painted and anodized surfaces, exposed to the atmosphere, collect soil and dirt, the amount of which may vary depending on geographic area, environmental conditions, finish and location on the building. Local atmospheric conditions as well as building location within a geographical area quite naturally have an effect on cleanliness.

More frequent cleaning will be required in heavy industrialized areas compared to rural areas. Seasonal rainfall can affect washing frequency by removing water soluble deposits and less adherent soil. In foggy coastal regions, frequent cycles of condensation and drying can create a heavy build-up of atmospheric salts and dirt which may adhere tenaciously. In climates where rainfall is low, the opportunity for atmospheric washing of the surface is minimal. Los Angeles, for example, has a unique combination of limited rainfall, temperature fluctuation, smog and condensation. This situation requires that cleaning be done more frequently than in other metropolitan areas where rainfall is more frequent.

In both wet and dry climates, recessed and sheltered areas usually become more heavily soiled because of the lack of rain washing. Frequent and longer periods of condensation also occur in protected areas increasing the adhesion of the soil. This is particularly true of soffit areas on some overhangs, bottom areas of fascia panels, sheltered column covers and the like. Periodic maintenance inhibits long-term accumulation of soil which, under certain conditions, can accelerate weathering of the finish. The more frequently aluminum is cleaned, the easier and less costly succeeding maintenance is. It is recommended the finish supplier be consulted for proper cleaning schedule.

3.4 In any case, the aluminum cleaning schedule be integrated with other cleaning schedules for efficiency and economy. For example, both the glass and the aluminum curtain wall on the same building can be cleaned at the same time. If automatic wall cleaning equipment is to be used on a building, a test should be made early in equipment design to insure that the cleaning solutions, brushes, as well as the frequency of cleaning have no detrimental effect on the coating.

4. CLEANING PROCEDURES AND CARE AFTER INSTALLATION

Construction soils, including concrete or mortar, etc., should be removed as soon as possible. The exact procedure for cleaning will vary depending on the nature and degree of soil. When selecting a method of cleaning and type of cleaner, consideration should be given to all other materials that may be adversely affected by the wash of the cleaning process. Try to restrict cleaning to mild weather. Cleaning should be done on the shaded side of the building or ideally on a mild, cloudy day.

4.1 REMOVAL OF LIGHT SURFACE SOIL ON ORGANIC AND ANODIC COATINGS

Removal of light surface soil may be accomplished by alternative methods as described in 4.1.1, 4.1.2, 4.1.3 and 4.1.4. Only trial and error testing employing progressively stronger cleaning procedures can determine which will be most effective. Begin the cleaning process at the top of the building by rinsing an area the width of the stage or scaffolding to the ground level in continuous drop with forceful water spray. This should be done at the beginning and the end of each drop regardless of the final cleaning materials employed.

4.1.1 The simplest procedure is to flush the surface with water using moderate pressure to dislodge the soil. If soil is still adhering after drying, then a mild detergent will be necessary.

4.1.2 When mild detergent or mild soap is necessary for removal of soil, it should be used with brushing or sponging. The washing should be done with uniform pressure, cleaning first with a horizontal motion and then with a vertical motion. Apply cleaners only to an area that can be conveniently cleaned without changing position. The surface must be thoroughly rinsed with clean water. It may be necessary to sponge the surface while rinsing, particularly if cleaner is permitted to dry on the surface. The rinsed surface is permitted to air dry or is wiped dry with a chamois, squeegee or lint-free cloth.

4.1.3 Run-down of cleaner (from any operation) to the lower portions of the building should be minimized and these areas should be rinsed as soon as and as long as necessary to lessen streaking, etc., from unavoidable run-down, lower areas should be kept wet or flooded with water. Do not allow cleaning chemicals to collect on surfaces or to "puddle" on horizontal surfaces, crevices, etc. These should be flushed with water and dried. Always clean coated surfaces down from top to bottom and follow with a thorough rinsing with clean water. (With one-story or low elevation buildings, it is recommended to clean from bottom up and rinse from top down.)

4.1.4 Mild soaps or detergents ruled safe for bare hands should be safe for coated aluminum. Stronger detergents should be carefully spot tested and may necessitate rubber gloves, long handled brushes, etc. With any soap or detergent the finish should be thoroughly rinsed with clean water and dried. Some mild cleaning solutions, comprised of selected wetting agents in water solution, are available for automatic-building-washing machines. These machines would have built-in brush agitation, squeegee, filtration and re-circulation; in some, a fresh water connection may be provided.

4.2 REMOVAL OF MEDIUM TO HEAVY SURFACE SOIL ON ANODIC COATINGS

4.2.1 If surface soil still adheres after using procedures under 4.1, cleaning with the assistance of a cleaning pad can be employed. Hand scrub the metal surface using a palm-sized nylon cleaning pad. Thoroughly wet pad with clean water or a mild detergent cleaner or pumice powder. Start across the top and work down, rubbing the metal surface in the direction of the metal grain with uniform pressure. After scrubbing, the metal surface should be rinsed thoroughly with clean water to remove all residues. It may be necessary to sponge the surface while rinsing, particularly if the cleaner is permitted to dry on the surface. Solvents may be used to remove non-water soluble deposits. Extreme care must be exercised when solvents are used since they may damage organic sealants, gaskets and painted finishes. If solvents are used, rinse the surface completely with clean water and allow the surface to air dry or wipe dry with a chamois, squeegee or lint-free cloth.

CAUTION: These procedures must not be used on surfaces with a factory applied clear organic protective coating unless the clear coating has deteriorated and should be removed. Many organic solvents are flammable and/or toxic refer to MSDS for proper handling.

4.2.2 Use of power cleaning tools may be necessary for removal of unusually heavy soils from large areas including panels and column covers. In such cases an air-driven reciprocating machine fitted with abrasive pads can be employed. During this operation, the surface being cleaned must be continually wetted with clean water or mild detergent cleaning solution to provide lubrication and a medium for carrying away the dirt. The cleaning solution may be applied to the panels by sponging or brushing. Water may be applied in the same manner by spraying from a hose or by utilizing the water connection on the cleaning machine. The machine is moved over the metal by the operator with a sufficient number of overlapped passes to effect maximum cleaning. The direction of travel with the cleaning machine is dependent largely upon the geometric configuration of the surface being cleaned. However, when possible, the machine strokes should be made first in one direction and then in a direction perpendicular to the first; (e.g., horizontal passes followed by vertical passes). Areas which are not accessible with the machine must be manually cleaned as in paragraph 4.2.1.

After an area has been machined scrubbed, it must be rinsed with clean water and thoroughly scrubbed with a fairly stiff bristle brush. While still wet, a final water rinse without brushing completes this cleaning operation. The rinsed surface should be either permitted to air dry or wiped dry with a squeegee, chamois or lint-free cloth. It is important to promptly remove any cleaner rundown

from the uncleaned lower portions of the building to avoid staining.

4.3 REMOVAL OF MEDIUM TO HEAVY SURFACE SOIL ON ORGANIC COATINGS

4.3.1 A mild solvent such as mineral spirits may be used to remove grease, sealant or caulking compounds. Stronger solvent or solvent containing cleaners may have a deleterious or softening effect on paints. To prevent harm to the finish, these types of solvent or emulsion cleaners should be spot tested and preferably the coating manufacturer should be consulted. Care should be taken to assure that no marring of the surface is taking place in this manner since this could give an undesirable appearance at certain viewing angles. Cleaners of this type are usually applied with a clean cloth and removed with a cloth. Remaining residue should be washed with mild soap and rinsed with water. Use solvent cleaners sparingly.

4.3.1.1 It may be possible for solvents to extract materials from sealants which could stain the painted surface or could prove harmful to sealants; therefore, these possible effects must be considered. Test a small area first.

4.3.2 If cleaning of heavy surface soil has been postponed or in the cases of an especially tenacious soil, stubborn stains, etc., a more aggressive cleaner and technique may be required. Cleaner and technique should be matched to the soil and the painted finish. Some local manual cleaning may be needed at this point. Always follow the recommendations of the cleaner manufacturer as to proper cleaner and concentration. Test clean a small area first. Cleaners should not be used indiscriminately. Do not use excessive, abrasive rubbing as such may alter surface texture or may impart a "shine" to the surface.

4.3.2.1 Concrete spillage that has dried on the painted surface may become quite stubborn to remove. Special cleaners and/or vigorous rubbing with non-abrasive brushes or plastic scrapers may be necessary. Diluted solutions of Muriatic Acid (under 10%) may be effective in removing dried concrete stains, however, a test area should be tried first. Proper handling precautions must be exercised for safety reasons. Also, effective proprietary cleaners for concrete and mortar staining are available.

4.3.3 Never mix cleaners together. The mixing of cleaners may not only be ineffective, but also very dangerous. For example, mixing of chlorine containing materials such as bleaches, with other cleaning compounds containing ammonia, can result in poison gas emission.

4.3.4 Always rinse after removal of any surface soil.

4.4 INSPECTION

It is suggested that the building owner provide an engineer or representative to inspect the cleaning work to ensure satisfactory clean appearance of the building.

4.4.1 Metal seams, crevices, sills and any other area that may trap water, cleaner or dirt must be cleaned and thoroughly dried. These "trap" areas must be hand-wiped with absorbent towels or cloths to prevent rundown streaks or "puddling" which will later cause discoloration.

4.4.2 Inspect metal surfaces for any discoloration or stains not removed during cleaning operations. Soil or discoloration's still remaining should be manually cleaned in accordance with sections 4.1, 4.2 and 4.3 until a satisfactory appearance is achieved. Stubborn surface soils should be scrubbed in a uniform direction using a nylon cleaning pad and cleaner solution.

5. CLEANING PRECAUTIONS

Here's a common sense summary of cleaning recommendations for architectural aluminum finishes.

5.1 Correctly identify the aluminum finish to be cleaned when selecting an appropriate cleaning method. Check specifications and/or "as-built" drawings if in doubt as to the finish.

5.2 Never use aggressive alkaline or acid cleaners on aluminum finishes. Do not use cleaners containing trisodium phosphate, phosphoric acid, hydrochloric acid, hydrofluoric acid, fluorides, or similar compounds on anodized aluminum surfaces. Strong solvents or abrasive cleaners can cause damage to painted surfaces. Always follow the cleaner manufacturer's recommendations as to the proper cleaner and concentration. Test-clean a small area first. Different cleaners should not be mixed.

5.3 It is preferable to clean the metal when shaded. Do not attempt to clean hot, sun-heated surfaces since possible chemical reactions on hot metal surfaces will be highly accelerated and non-uniform. Also, avoid cleaning in freezing temperatures or when metal temperatures are sufficiently cold to cause condensation. Surfaces cleaned under these adverse conditions can become so streaked or tainted that they cannot be restored to their original appearance.

5.4 Apply the cleaning solution only to an area that can be conveniently cleaned without changing position. Thoroughly rinse the surface with clean water before applying cleaner. Minimize cleaner rundown over the lower portions of the building and rinse such areas as soon as practical.

5.5 Strong cleaners should not be used on windows and

other building accessories where it is possible for the cleaner to come in contact with the aluminum. Solutions of water and mild detergents should be tried first. If an aggressive cleaner is required for some other component of the building, care must be taken to prevent the cleaner from contacting the aluminum finish.

Note: *Care should be taken to avoid over spray or run off of cleaner onto other buildings components such as glazing materials, weatherstripping sealants, etc.*

5.6 Do not use excessive abrasive rubbing to remove stubborn stains. Such procedures can produce an undesirable appearance or adversely affect the finish.

5.7 The type and frequency of cleaning and coating will vary with the amount of atmospheric soil and dirt accumulated on the surfaces and the owners desires regarding appearance. Periodic re-application and wipe-on surface protectants will assist in maintaining the appearance and reduce the cleaning required.

American Architectural Manufacturers Association
1827 Walden Office Square, Suite 550
Schaumburg, IL 60173
PHONE (847) 303-5664 FAX (847) 303-5774
WEBSITE www.aamanet.org
EMAIL webmaster@aamanet.org

OPERATION & MAINTENANCE RECOMMENDATIONS

- Every 3-4 weeks, the following items should be lubricated with STP Spray Silicone to insure the hardware functions properly:
    1. Door and Frame Pivots
    2. Lock Cylinders
    3. Exit Device (Panic) Hardware (fig. 3 pg. 30)
    4. Closer Arm

- The following items need to be checked regarding the door closer:
    1. Check/Adjust the Sweep Range, Latch Range, and the Back Check. This adjustment is made by turning the Valves on the end of the closer. The "S" valve = Sweep, the "L" valve = Latch, and the "BC" valve = Back Check.
    2. Check and tighten all loose screws on the closer arm and closer unit.

- Proper clearances are essential for proper operation of doors installed. Reference the installation of door and exit device (panic) hardware installation instructions.

- Chemicals used to melt ice should not come in contact with aluminum threshold, bottom of door jambs or pivot hardware. These chemicals are very corrosive and may cause door failure and possible personal injury.

Glass Cleaning Recommendations

Vitro (formerly PPG) float glass is a durable product that can be maintained in satisfactory condition by regular cleaning using accepted good glass cleaning practices. Glass should be washed at frequent intervals, particularly during the project construction when the possibility of dirt, debris, and potentially harmful exposure to corrosive materials is high.

Recommended Glass Cleaning Practice

For all glass surfaces, except Solarcool® and Vistacool™ coated glasses:

- Use a wash solution that includes a mild soap or detergent, or a slightly acidic cleaning solution.

  ✓ **DO NOT** use any additives that contain hydrofluoric acid, or have the possibility of forming hydrofluoric acid. Hydrofluoric acid will quickly and permanently damage the glass surface.

  ✓ **DO NOT** use harsh cleaners, abrasives or alkaline materials.

- Cleaning of tinted and reflective glass surfaces in direct sunlight should be avoided. The surface of the glass may be too hot to achieve satisfactory results and, in extreme cases, contact with cold water could lead to glass breakage.

- Use clean, grit free cloths, together with the wash solution, to clean the glass. Sufficient wash solution should be used to ensure that debris can be removed without causing abrasion related glass damage. Remember, in addition to being a solvent for cleaning dirty glass, the wash solution acts as a lubricant to "float" loose debris off of the glass surface.

  ✓ Care must be taken to ensure that gritty dirt particles picked up by the cloth do not scratch the glass.

- For best results, clean the glass beginning at the top and working down.

- Immediately follow the washing with liberal amounts of clean rinse water.

- Promptly remove excess rinse water with a clean, good quality squeegee. Squeegees must be in good condition, clean and undamaged. In particular, any debris must be removed from the squeegee to prevent possible glass damage.

- Remove grease and glazing materials with commercial solvents such as xylene, toluene, Leptyne®, turpentine, mineral spirits or naptha. Immediately follow with a normal wash and rinse as described above.

  ✓ Be careful not to damage glazing or insulating glass unit seals by excess application of strong solvents.

  ✓ Comply with all of the solvent manufacturer's directions concerning safety, proper handling, toxicity, and flammability warnings.

Glass Cleaning Recommendations

- ✓ It is strongly recommended that the glazing material and sealant manufacturers be contacted and asked for advice regarding the selection and use of appropriate solvents that will not harm their respective products.

- ✓ **DO NOT** use metal scrapers or tools to attempt to remove stubborn materials or stains. In extreme cases, a combination of the appropriate solvent and a **PLASTIC** scraper, carefully used, may work. If the glass is heat strengthened or tempered, even a plastic scraper may dislodge very small surface debris that has fused to the glass surface during the heat treating process and cause glass damage. You are encourage to refer to GANA publication TD-02-0402: Heat-Treated Glass Surfaces Are Different and GANA publication TD-01-0300: Proper Procedures for Cleaning Architectural Glass Products for a discussion of heat treated glass surfaces and for a more detailed discussion of the cleaning of heat strengthened and tempered glass.

Cleaning *Solarcool and Vistacool* Coated Glasses

Solarcool and Vistacool coated glasses can be cleaned using the previous recommendations except for the following:

- Acidic cleaning solutions are not recommended. Use only mild soaps or detergents.

- Abrasive cleaners, fluoride salts, or hydrogen producing compounds are not recommended.

In addition, because fingerprints, stains, smears, dirt, scum, sealant residue, scratches, and abrasions are more noticeable on reflective glasses than on non-reflective glass, take extra care in handling and cleaning the glass.

Finally, *Solarcool* and coated glass that is glazed with the coating exposed to the outdoors should be cleaned more frequently (a minimum of 3 to 4 times per year). Materials, such as rundown from metals and masonry, such as concrete, stucco, etc. should be cleaned from the glass as soon as they occur so that they are not permitted a long residence time on the coated glass surface. If such rundown is not quickly removed, permanent staining and/or glass damage may occur.

It should be understood that while such rundown residue will be more noticeable on reflective glass, it can also occur with uncoated glass, resulting in similar permanent staining and/or glass damage.

Glass Cleaning Recommendations

HISTORY TABLE		
ITEM	DATE	DESCRIPTION
Original Publication	03/13/2006	TD-142
Rev 1	07/25/2013	Added Vistacool, title of GANA Publication TD-01-0300, and turpentine to solvent list
Rev 2	2016-10-04	Updated to Vitro Logo and format

This document is intended to inform and assist the reader in the application, use, and maintenance of Vitro Flat Glass products. Actual performance and results can vary depending on the circumstances. **Vitro makes no warranty or guarantee as to the results to be obtained from the use of all or any portion of the information provided herein, and hereby disclaims any liability for personal injury, property damage, product insufficiency, or any other damages of any kind or nature arising from the reader's use of the information contained herein.**

Glass Informational Bulletin **GANA 01-0300**

Proper Procedures for Cleaning Architectural Glass Products

Architectural glass products play a major role in the comfort of living and working environment of today's homes and commercial office spaces. By providing natural daylight, views of the surroundings, thermal comfort and design aesthetics, glass usage and condition often affect our selection of where we live, work, shop, play and seek education.

Architectural glass products must be properly cleaned during construction activities and as a part of routine maintenance in order to maintain visual and aesthetic clarity. Since glass products can be permanently damaged if improperly cleaned, glass producers and fabricators recommend strict compliance with the following procedures for properly cleaning glass surfaces.

As dirt and residue appear, interior and exterior glass surfaces should be thoroughly cleaned. Concrete or mortar slurry which runs down (or is splashed on) glass can be especially damaging and should be washed off as soon as possible. Before proceeding with cleaning, determine whether the glass is clear, tinted or reflective. Surface damage is more noticeable on reflective glass as compared with the other glass products. If the reflective surface is exposed, either on the exterior or interior, special care must be taken when cleaning, as scratches to the reflective glass surface can result in coating removal and a visible change in light transmittance. Cleaning tinted and reflective glass surfaces in direct sunlight should be avoided, as the surface temperature may be excessively hot for optimum cleaning. Cleaning should begin at the top of the building and continue to the lower levels to reduce the risk of leaving residue and cleaning solutions on glass at the lower levels. Cleaning procedures should also ensure that the wind is not blowing the cleaning solution and residue onto already cleaned glass.

Cleaning during construction activities should begin with soaking the glass surfaces with clean water and soap solution to loosen dirt or debris. Using a mild, non-abrasive commercial window washing solution, uniformly apply the solution to the glass surfaces with a brush, strip washer or other non-abrasive applicator. Immediately following the application of the cleaning solution, a squeegee should be used to remove all of the cleaning solution from the glass surface. Care should be taken to ensure that no metal parts of the cleaning equipment touch the glass surface and that no abrasive particles are trapped between the glass and the cleaning materials. All water and cleaning solution residue should be dried from window gaskets, sealants and frames to avoid the potential for deterioration of these materials as the result of the cleaning process.

It is strongly recommended that window washers clean a small area or one window, then stop and examine the surface for any damage to the glass and/or reflective coating. The ability to detect certain surface damage, i.e. light scratches, may vary greatly with the lighting conditions. Direct sunlight is needed to properly evaluate a glass surface for damage. Scratches that are not easily seen with a dark or gray sky may be very noticeable when the sun is at a certain angle in the sky or when the sun is low in the sky.

2945 SW Wanamaker Drive, Suite A Topeka, KS 66614-5321
(785) 271-0208 Fax: (785) 271-0166
www.glasswebsite.com

The glass industry takes extreme care to avoid glass scratches by protecting all glass surfaces during glass manufacturing and fabrication, as well as during all shipping and handling required to deliver the glass to the end user. A large percentage of damaged glass results from non-glass trades working near glass. This will include painters, spacklers, ironworkers, landscapers, carpenters and others who are part of the construction process. They may inadvertently lean tools against the glass, splash materials onto the glass and/or clean the glass incorrectly, any of which can permanently damage glass.

One of the common mistakes made by non-glass trades people, including glass cleaning contractors, is their use of razor blades or other scrappers on a large portion of the glass surface. Using 2, 3, 4, 5 inch and larger blades to scrape a window clean carries a large probability for causing irreparable damage to glass.

The entire industry of glass manufacturers, fabricators, distributors, and installers neither condones nor recommends widespread scraping of glass surfaces with metal blades or knifes. Such scraping will often permanently damage or scratch the glass surfaces. When paint or other construction materials cannot be removed with normal cleaning procedures, a new 1" razor blade may need to be used only on non-coated glass surfaces. The razor blade should be used on small spots only. Scraping should be done in one direction only. Never scrape in a back and forth motion as this could trap particles under the blade that could scratch the glass. This practice may cause hairline concentrated scratches, which are not normally visible when looking through the glass, but may be visible under certain lighting conditions.

Jobsite storage and construction conditions can lead to stains on the glass surface. Cleaning and removal of such stains may require the use of a more aggressive cleaning solution and procedure. If conditions are found that cannot be cleaned using the above procedures, contact the glass supplier for guidelines on stain removal.

Members of the Glass Association of North America (GANA) publish information relating to jobsite protection and cleaning of architectural glass products. In order to ensure long-term performance of the glass in a building, GANA encourages glazing contractors, general contractors, building management and owners to be aware of conditions that can damage glass and to follow the handling and cleaning guidelines provided by their glass producer and fabricator.

Consult the GANA website (www.glasswebsite.com) for additional information on glass and glazing applications and links to members providing additional technical resources.

The Glass Association of North America (GANA) has produced this Glass Information Bulletin solely to provide general information as to basic proper procedures for cleaning architectural glass products. The Bulletin does not purport to state that any one particular type of glass cleaning process or procedure should be used in all applications or even in any specific application. The user of this Bulletin has the responsibility to ensure the cleaning instructions from the glass supplier are followed. GANA disclaims any responsibility for any specific results relating to the use of this Bulletin, for any errors or omissions contained in the Bulletin, and for any liability for loss or damage of any kind arising out of the use of this Bulletin.

Copyright GANA, 2000

Quick-Reference Guide to Cleaning Architectural Glass Products

The following "Do's" and "Do Not's" are offered as a supplement to the Glass Association of North America (GANA) Glass Informational Bulletin – *Proper Procedures for Cleaning Architectural Glass Products*:

The following are things to DO:

- DO clean glass when dirt and residue appear

- DO determine if coated glass surfaces are exposed

- DO exercise special care when cleaning coated glass surfaces

- DO avoid cleaning tinted and coated glass surfaces in direct sunlight

- DO start cleaning at the top of the building and continue to lower levels

- DO soak the glass surface with a clean water and soap solution to loosen dirt and debris

- DO use a mild, non-abrasive commercial window cleaning solution

- DO use a squeegee to remove all of the cleaning solution

- DO dry all cleaning solution from window gaskets, sealants and frames

- DO clean one small window and check to see if procedures have caused any damage

- DO be aware of and follow the glass supplier's specific cleaning recommendations

- DO caution other trades against allowing other materials to contact the glass

- DO watch for and prevent conditions that can damage the glass

- DO read the entire GANA bulletin on glass cleaning before starting to clean glass

Copyright GANA, 2000

The following are things to NOT do:

- DO NOT start cleaning without reading the entire GANA bulletin on glass cleaning

- DO NOT use scrapers of any size or type for cleaning glass

- DO NOT allow dirt and residue to remain on glass for an extended period of time

- DO NOT begin cleaning glass without knowing if a coated surface is exposed

- DO NOT clean tinted or coated glass in direct sunlight

- DO NOT allow water or cleaning residue to remain on the glass or adjacent materials

- DO NOT begin cleaning without rinsing excessive dirt and debris

- DO NOT use abrasive cleaning solutions or materials

- DO NOT allow metal parts of cleaning equipment to contact the glass

- DO NOT trap abrasive particles between the cleaning materials and the glass surface

- DO NOT allow other trades to lean tools or materials against the glass surface

- DO NOT allow splashed materials to dry on the glass surface

This bulletin was developed by the GANA Tempering Division - Construction Subcommittee and approved by the Tempering Division - Standards & Engineering Committee and GANA Board of Directors. This is the original version of the document as approved and published in March 2000.

Copyright GANA, 2000

3728 W. Ashcroft Ave, Fresno, CA 93722 Phone:559-243-1080 Fax: 559-243-7080

Table of Contents

Aluminum Storefront & Door: Oldcastle Building Envelope **1**

Cleaning.....

Aluminum Cleaning (Metal Finishes) 1a

Anodized Finishes Cleaning..... 1b

Cleaning & Maintenance..... 1c

Doors Operation & Maintenance Recommendations 1d

Glass: Glassfab Tempering Service, INC. **2**

Cleaning.....

Cleaning Recommendations 2a

GANA – Proper Procedures for Cleaning Architectural Glass Products..... 2b

TECHNICAL BULLETIN

Cleaning Metal Finishes

Caution: In polishing or cleaning metals, always follow the polish manufacturer's recommended instructions for safety and use, and carefully review all Material Safety Data Sheets applicable to such products. Special precautions must be taken with certain cleaners and polishing agents in order to avoid personal injury due to exposure to such products.

Acidic or alkaline cleaning materials or solvents may damage gunned sealants, vinyl, EDPM or neoprene glazing strips and cause water leakage into the building. These materials may also damage insulating unit sealants and cause premature failure of the insulating units. Acidic or alkaline cleaning materials or solvents may also damage Brass or Bronze metal finishes. Care must be taken to prevent this type of damage.

Anodized Aluminum: Proper care can provide years of service with minimum maintenance. Dust and grime should be removed by regular cleaning. Use a mild, non-abrasive soap or detergent and water. To remove tar or dirt build-up, use SofScrub® followed by a soap and water cleaning and fresh water rinse. Acid or alkali cleaners should not be used as they may attack the anodic coating. After cleaning, surfaces should be wiped dry with a clean absorbent material, especially in hard water areas.

Painted Aluminum: Dust and grime should be removed by regular cleaning. Use a mild, non-abrasive soap or detergent and water. Wet the surface thoroughly and clean gently using a soft, clean sponge or cloth. Follow with a fresh water rinse. Surfaces should be wiped dry with a soft, clean cloth. Contact the paint manufacturer for instructions on removing tar, sealants or dirt build-up. Do not use solvents or abrasive cleaners on painted surfaces without approval from the paint manufacturer.

Mirror Polished Stainless Steel (Alloy 304): Mirror polished stainless steel finishes should be cleaned with a concentrated foam spray cleaner (such as Sprayway®, or a similar product) and wiped with a clean, dry cloth. Such foam cleaners can be used as often as necessary. Liquid solutions may cloud or scratch polished stainless steel finishes.

Satin Polished Stainless Steel (Brushed) (Alloy 304): Satin polished stainless steel finishes should be wiped clean with a mild soap and water solution, rinsed with clean water and wiped with a clean, dry cloth for occasional smudges. For periodic maintenance, satin stainless steel can be rubbed with an abrasive pad (such as a #9650 General Purpose Rubbing Pad by 3M). The finish should always be rubbed in the same direction as the grain texture.

Mirror Polished Brass (or Bronze) (Alloy 220/260/280/385/464) Mirror polished copper alloys should be periodically cleaned, when it begins to tarnish, with a brass polishing cream that uses low level abrasives (such as Brasso®, or a similar product). The liquid or cream polish should be used in accordance with the manufacturer's recommended instructions for safety and use. Do not use circular motions when polishing. If the brass is heavily stained or tarnished, please contact a brass manufacturer for acceptable cleaning methods. After cleaning and removal of stains, polish with an appropriate metal

polish. Appropriate metal polishes can be obtained from janitorial supply houses or home owner's hardware supply stores.

Satin Polished Brass (or Bronze) (Alloy 220/260/280/385/464): Satin polished copper alloy finishes should be cleaned by rubbing with an abrasive pad (such as #9650 General Purpose Rubbing Pad by 3M). The finish should always be rubbed in the same direction as the grain texture.

Satin, Oxidized and Oil Rubbed Bronze (Alloy 385/464): Satin, oxidized and oil rubbed bronze should be periodically maintained by wiping with liquid lemon oil, such as the type used on wood. It should be applied with a clean cloth. The lemon oil should not be wiped dry after applying, but allowed to air dry naturally. Finishes Coated with Clear Baked Enamel or Clear Enamel or Clear Lacquer:

Finishes coated with a clear baked enamel, clear enamel or clear lacquer coating can be cleaned periodically by gently wiping with a mild soap and water solution, rinsed with clean water and wiped with a clean, dry cloth.

GENERAL INFORMATION & MAINTENANCE OF STAINLESS STEEL PRODUCTS Stainless Steel is a common chromium/nickel alloy steel used in thousands of products from ocean-going craft to tableware. A protective chromium oxide film forms on its surface which gives stainless its superior corrosion-resistant property. When properly maintained, stainless provides excellent luster, strength and durability. And, in most applications, stainless will not rust or stain even after many years of service.

However, Stainless Steel is NOT stain or rust proof. Atmospheric conditions, environmental pollution, or even close proximity to a body of water can all be contributing factors to corrosion. Stainless will also discolor, rust or corrode if used in contact with chloride salts, sulfides or other rusting metals.

Proper care and maintenance of stainless in marine environments, polluted surroundings, salted highways, or other situations where stainless may be exposed to corrosive elements will help keep your stainless products beautiful and functional for years to come.

Unfortunately, Stainless Steel does not necessarily remain stainless without periodic maintenance. The best way to remove mild corrosion is with chrome cleaner. Apply like you would a wax, let dry, and rub vigorously to remove spots and restore the luster. On a satin finish you can use a Scotch-Brite pad to remove tougher spots and help restore the original sheen. To insure lasting beauty, a good quality car wax should be applied.

CARE AND CLEANING

Mirror Polished Stainless Steel: Mirror polished stainless steel finishes should be cleaned with a foam spray cleaner, such as:

CRL Sprayway - Stainless Steel Polish & Cleaner SW841 cleans, polishes and protects stainless steel without hard rubbing and polishing. Resists finger prints, grease and water splatter. Helps preserve the factory finish. and wiped with a clean, dry cloth, such as: CRL Lint Free Shop Wipes 1550 are made with four plies of strong, white paper and reinforced in both directions with an extra ply of tough nylon.

These rugged towels will stand up to the most demanding shop work. 1550 wipes can absorb many times their weight in liquids.

CRL Glass Wipes are virtually lintfree. Such foam cleaners can be used as often as necessary. Liquid solutions may cloud or scratch polished stainless steel finishes. For periodic maintenance, mirror stainless can be polished with:

CRL Autosol® Shine 1188AS cleans, restores and polishes all metal surfaces and will protect against corrosion and tarnishing. Mild abrasives help to remove built-up tarnish, oxidation and even rust, leaving behind a protective coating, which helps to condition the metal and protect against corrosion while providing a longer lasting shine

Do not use circular motions when polishing.

Satin Polished Stainless Steel (Brushed): Satin polished stainless steel finishes should be cleaned like Mirror polished Stainless Steel, just with circular motions in the same direction as the grain texture. For periodic maintenance, satin stainless steel can be rubbed with an abrasive pad such as Scotch-Brite General Purpose Hand Pad 7447 by 3M, or Scotch-Brite Ultra Fine Hand Pad 7448 by 3M, or Scotch-Brite General Purpose Scrubbing Pad 9650 by 3M. The finish should always be rubbed in the same direction as the grain.

CRL Scratch-B-Gone Kits return brushed stainless steel surfaces to new condition in cases of scuffs, fine scratches, light or deep scratches, chemical discoloration, oxidation, and color distortion caused by heat scorching or welding. Easy, fast and simple to use, the Scratch-B-Gone kits combine special open weave, abrasive loaded pads, with Ultra Shine™ cutting lubricant and surface oxidant to return the brushed 'warm look' and to blend the repaired surface with surrounding areas. These surface restoration kits are available in two sizes (Basic Professional, Cat. No. SBG1; or the larger Master Professional, Cat. No. SBG2) and come with complete instructions and a tutorial DVD.

Here are some more tips on keeping your stainless clean and rust-free:

Always - Clean Stainless frequently with soap and water. Any cleaner safe for glass is usually safe for stainless.

NEVER - Use coarse abrasives like sandpaper or steel wool on stainless. They may actually cause rusting.

NEVER - Clean with mineral acids or bleaches.

NEVER - Leave Stainless in contact with iron, steel, or other metals which cause contamination leading to rust or corrosion.

Questions, comments, or suggestions, please contact CRL Technical Sales.

rev 6/15/10

ANODIZED FINISHES

ANODIZED FINISHES DESIGNATION

The Aluminum Association Designation System is considered the standard of the industry for standard anodized finishes. The Aluminum Association, however, lists many finishes, some of which are not often used in architectural applications. In order to keep costs down and to maintain optimum shipping schedules, while still providing the finest in architectural aluminum, Vistawall currently offers eight standard finishes. For internal record keeping, a 3-digit designation has been assigned to our standard finishes.

Trade Names		Vistawall	AA
CLEAR	CLASS II	204	AA-M12C22A31
CLEAR	CLASS I	215	AA-M12C22A41
BRONZE	CLASS II	745	AA-M12C22A41
BRONZE	CLASS I	740	AA-M12C22A44
BLACK	CLASS I	760	AA-M12C22A44
LIGHT BRNZ	CLASS I	700	AA-M12C22A44
MED BRNZ	CLASS I	710	AA-M12C22A44
CHAMPAGNE	CLASS I	699	AA-M12C22A44

Class I - .7 mils
Class II- .4 mils

RECOMMENDED INSPECTION PROCEDURES

Building managers and owners should have an engineer or other qualified person inspect cleaning and maintenance of anodized or painted finishes .

•It is important to check metal seams; sills, crevices and other areas that can trap dirt, cleaner or water, to be sure they are clean and dry.
•It is recommended that a final inspection be made to verify that no stains or discoloration remain on surfaces.

CLEANING, CARE AND MAINTENANCE OF ANODIZED FINISHES

Architectural aluminum finishes, whether painted or anodized, require care before and during installation and periodic maintenance after installation. Although resistant to corrosion, discoloration and general wear, both types of finishes can be damaged by neglect, abuse and harsh chemicals. Also, exterior surfaces collect various amounts of dirt and soil—of course, the amount depends on the environmental conditions, the building elevation and the type of finish.

Architectural aluminum should be cleaned at least once a year to prohibit accumulation of soil, which can speed-up the weathering of finishes. For efficiency, glass and aluminum cleaning should be scheduled simultaneously. More frequent cleaning is recommended for finished aluminum that is exposed to harsh marine environments. Buildings located in certain areas also may dictate more frequent cleaning. These include locations in heavy industrial areas, locations with heavy rainfall and sheltered areas lacking rainfall and encouraging condensation.

©VISTAWALL ARCHITECTURAL PRODUCTS
EFFECTIVE 10/04

Cleaning Anodized Finishes

When cleaning anodized surfaces, precautions must be taken. These include:

•Cleaning should start at the top of the building, moving down to the ground level in a continuous descent the width of the scaffolding.
•Always consider the effects of run-off on personnel, plants and equipment when scheduling the cleaning of finishes.
•Choose the appropriate method of cleaning for the type of finish.
•First test a small area of the finish and follow recommendations for mixing and diluting cleaners.
•Avoid using abrasive materials such as steel wool or hard-bristle brushes, which can damage finishes. Strong window glass cleaners that may come in contact with aluminum should not be used.
•Do not use paint removers, aggressive alkaline, acid or abrasive cleaners. Never mix cleaners or substitute heavy-duty cleaners when milder cleaners are specified.
•Be sure that all sponges, cloths and other cleaning equipment are free of grit.
•Do not clean finishes during extreme temperatures, which can accelerate chemical reactions, there fore causing streaking or staining.
•Post-construction cleaning should take place as soon as possible, due to the fact that mortar, cement and other alkaline materials will corrode anodic coatings when allowed to dry on the metal surface.
•Brickwash, which is also acidic, can corrode anodic coatings.

Stain Removal—Anodized Finishes

If general cleaning procedures have been attempted, the next step is cleaning with an abrasive pad soaked in clean water or a mild detergent.

•Hand-scrub the metal surface using a small, nylon cleaning pad. Rub the metal in the direction of the grain.
•After cleaning, rinse the surface thoroughly with clean water or wipe with solvent to remove all residue.
•If cleaning solutions have dried on the surface, wipe dry with a clean cloth, squeegee or chamois.
•For the removal of heavy soils, a power-cleaning tool may be needed. If this operation is necessary, the surface must be kept wet with a clean water or mild detergent to provide lubrication and dirt removal. As with hand cleaning, alternate horizontal and vertical strokes should be used.
•The area then must be rinsed and scrubbed again with a hard-bristle brush. The operation is completed by a final rinse, and the surface is wiped dry or air-dried. Any cleaner running down onto uncleaned surfaces should be removed to avoid staining.

Cleaning Of Non-Water Soluble Deposits For Anodized Finishes

Non-water soluble deposits such as grease, tar, oil and paint may be removed with solvents.

•Prolonged contact with solvents may also damage organic sealants, gaskets and finishes.
•Always avoid using solvents on anodic finishes protected by clear coatings such as lacquer. Use organic solvents in accordance with manufacturer's safety recommendations.
•Most organic solvents are flammable and toxic and should be handled with extreme care. Use pro tective clothing, goggles and be sure of adequate ventilation.
•When using solvents, avoid open flames, sparks and electrical motors.

©VISTAWALL ARCHITECTURAL PRODUCTS
EFFECTIVE 10/04

PROTECTIVE COATINGS FOR ANODIZED ALUMINUM

Aluminum finishes should be protected at the job site and following installation. As stated earlier, cement, mortar and other alkaline materials, as well as acid-based cleaning materials for masonry products, are damaging to finishes and should be removed with soap and water immediately. Coatings that protect finishes at the job site include:

Lacquer—although a clear lacquer coating can temporarily protect the surface of anodized aluminum, it has draw-backs, which include:
•Changing the appearance of anodized finishes.
•Making the surface seem painted rather than anodized.
•Causing small white areas to appear where there is a loss of adhesion.

Strippable Plastic—these plastics have been available for some time, but they also have weaknesses:
•They are developed with cohesive strength but inadequate adhesive strength.
•Uniform thickness is difficult to achieve, and where the film is thin, the cohesive strength decreases and the adhesive strength increases.
•Exposure to the sun can make the vinyl film brittle.
•Thin coatings can be difficult to remove.
•Thick coatings, on the other hand, tend to peel off prematurely.
•If the time is taken to properly apply these plastic coatings, they can provide adequate protection at the job site.

INSULATING COATINGS FOR ANODIZED ALUMINUM

For jobs that require that the architectural aluminum be attached directly to other metals, a coating should be applied to act as an insulator between the two metals. A zinc-based primer is the most common coating. It should be applied to the steel or other metal, as opposed to the aluminum--its pigment offers cathodic protection for the coated metal. The formulation used depends on the solvent system, as well as the vehicle used.

Zinc and clear lacquer are often used when aluminum is installed with direct contact with uncured concrete plaster or other alkaline material. This type of coating protects the aluminum from corrosion. Bituminous paint is also used for insulation. It has very good resistance to water, salts, acids and alkalines that depend on water as a carrier for ionization. Bituminous paints are inexpensive allowing contractors to use a thick coating, which provides insulation against galvanic action. These paints are easily dissolved with almost any organic solvent.

RECOMMENDED INSPECTION PROCEDURES

Building managers and owners should have an engineer or other qualified person inspect cleaning and maintenance of anodized or painted finishes .

•It is important to check metal seams, sills, crevices and other areas that can trap dirt, cleaner or water, to be sure they are clean and dry.
•It is recommended that a final inspection be made to verify that no stains or discoloration remain on surfaces.

©VISTAWALL ARCHITECTURAL PRODUCTS
EFFECTIVE 10/04

AAMA REFERENCE PUBLICATION

The American Architectural Manufacturers Association (AAMA) has published two specification guides to provide information on the care and maintenance of exterior wall finishes.

•AAMA 609 & 610-02—
Cleaning and Maintenance
Guide for Architectural
Finished Aluminum
•For copies of the guide, contact:
American Architectural Manufacturers Association
1827 Walden Office Square, Suite 104
Schaumburg, IL 60173
Phone: 847/303-5664

©VISTAWALL ARCHITECTURAL PRODUCTS
EFFECTIVE 10/04

SUBCONTRACTOR WARRANTY FORM

PROJECT: Madera Industrial WHSE

LOCATION: S. Schnoor Ave & W. Almond Ave Madera Ca.

OWNER: Madera Industrial WHSE, LLC

GENERAL CONTRACTOR: DBKO Design+Build LLC

We, Performance Electric, Subcontractor for DBKO Design|Build LLC, do hereby warrant that all labor and materials furnished and work performed in conjunction with the above referenced project are in accordance with the Contract Documents and authorized modifications thereto, and will be free from defects due to defective materials or workmanship for a period of 1 year(s) from the Date of Substantial Completion.

Should any defect develop during the warranty period due to improper materials, workmanship or arrangement, the defect, including adjacent work displaced, shall be made good by the undersigned at no expense to the Owner.

The Owner will give Subcontractor written notice of defective work. Should Subcontractor fail to correct defective work within 60 days after receiving written notice, the Owner may, at his option, correct defects and charge Subcontractor costs for such correction. Subcontractor agrees to pay such charges upon demand.

FOR: Madera Industrial WHSE	FOR:
BY: Tom Dukes	BY:
TITLE: Owner	TITLE:
DATE: 4/24/23	DATE:

WESTGATE
THE FUTURE IS HERE...AND IT'S QUITE BRIGHT!
RADIUS SERIES

JOB NAME: _____

DATE: _____

TYPE: _____

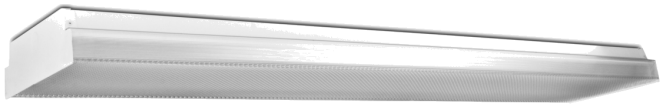

DIMENSIONS:

46.8"(L) x 6.5"(W) x 2.5"(H)

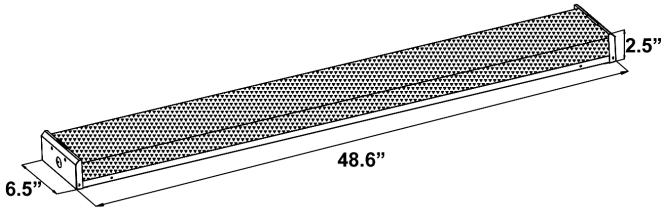

WAS-4FT-42W-35K-D
WAS-4FT-42W-40K-D
WAS-4FT-42W-50K-D

LED STANDARD WRAP-AROUND FIXTURE

Ideal for hotel, offices, retail outlets, restaurant, parking garages, storage room, conference room, education facilities and more.

MODEL	WATTS	VOLTAGE	LUMENS	COLOR TEMP
WAS-4FT-42W-35K-D	42W	100~277VAC	4400LM	3000K
WAS-4FT-42W-40K-D	42W	100~277VAC	4400LM	4000K
WAS-4FT-42W-50K-D	42W	100~277VAC	4400LM	5000K

ELECTRICAL SPECIFICATIONS:

- Voltage: 100-277VAC
- Wattage: 42W
- Power factor: >0.95
- Efficacy: 104LM/W

HOUSING SPECIFICATIONS:

- Die-formed heavy gauge cold rolled steel with powder coated white
- Steel Thickness: 24 Gauge
- Optional Driver
- Installation: Ceiling-mounted
- Ambient Temperature: -22˚F ~ 107˚F

CERTIFICATIONS: UL, DLC

LIGHTING SPECIFICATIONS:

- Dimming: 0~10 dimmable
- Lens: Opal Polycarbonate
- Light Source: High-lumen LEDs
- Total lumens: 4400LM
- Color temperature: 3000K/4000K/5000K
- Color rendering index: >82

WARRANTY: 5 years

Rev. 2019-09-26

WESTGATE MFG., INC.
• Phone (877) 805-2252 • Fax (877) 809-2252

WESTGATE
THE FUTURE IS HERE...AND IT'S QUITE BRIGHT!

JOB NAME: _____

DATE: _____

TYPE: _____

DIMENSIONS:

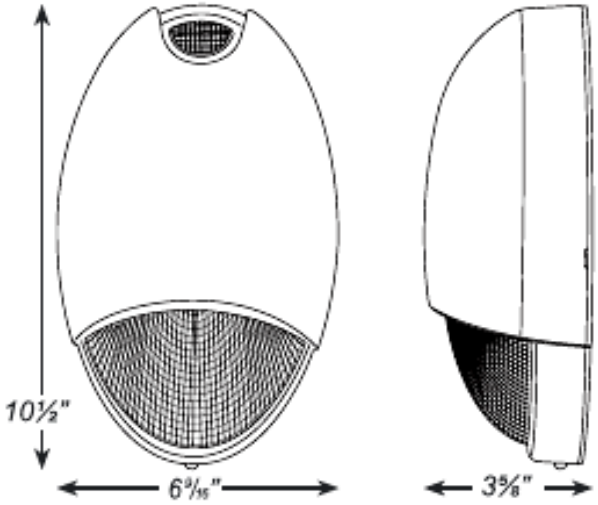

DBEL-ACEM-WH-SDT
DBEL-ACEM-BK-SDT
DBEL-ACEM-BR-SDT
DBEL-ACEM-N-SDT

DECORATIVE OUTDOOR LED AC/EMERGENCY

MODEL	VOLTAGE	WATTAGE	FINISH	BATTERY
DBEL-ACEM-WH-SDT	120-277V	12W	White	NiCd
DBEL-ACEM-BK-SDT	120-277V	12W	Black	NiCd
DBEL-ACEM-BR-SDT	120-277V	12W	Dark Bronze	NiCd
DBEL-ACEM-N-SDT	120-277V	12W	Nickel	NiCd

ELECTRICAL SPECIFICATIONS:

- Voltage: 120-277V
- Wattage: 12W (2 LEDs X 6W)per unit

HOUSING SPECIFICATIONS:

- Die-cast aluminum housing
- Finish: Powder-coated White or Black or Dark Bronze or Nickel finish
- Photocell control sensor included
- Universal knockout pattern on back plate for wall mount
- Threated opening at the top of the enclosure for conduit mount
- Sealed and gasketed
- Suitable for wet location (32˚F to 122˚F)

CERTIFICATIONS: UL

LISTED

TECHNICAL SPECIFICATIONS:

- Solid state electronics and charger board
- Push-to-test switch
- 4.8V, Rechargeable NiCd battery
- 90-minute EM-rated with push style test switch and red indicator light

WARRANTY: 3 years

- Meets UL924, NFPA life safety code, Local and State codes, NEC,OSHA

Rev. 2020-05-26

WESTGATE MFG., INC. • Phone (877) 805-2252 • Fax (877) 809-2252

HIGH BAY LIGHT
H7

Ultra-high efficiency
up to 150 lm/W

QUICK SHIP
RoHS
5 YEAR WARRANTY
SAA APPROVALS
IP65
CE
IK10
FC
Dimmable
UL CERTIFIED
Wet location
DLC LISTED PREMIUM

Note:Not all of the products indicated in this specification are DLC premium qualified, please refer to https://www.designlights.org/searcher for more details.

HIGH LIGHT · DURABLE · SAVE COST
80W/100W/120W/150W/200W

Suitable for Factory / Warehouse / Indoor Basketball / Court / Gym / Shopping mall and other Industrial and Commercial venues

HGLEDR
Add:4-12/F Baiyisheng Building,Baihuayuan RD,Guangming District, Shenzhen City, China
Tel:+86-755-8889388[illegible]865 Fax:+86-755-88893869 E-mail:andy@gdhgled.com
Web: www.hgledr.com

Features

UL Listing: Suitable for wet locations

LEDs: Long-life, high-efficiency, surface mount LEDs

Lifespan: 100,000-hour LED lifespan based on IES LM-80 results and TM-21 calculations

Drivers:
80W:
Constant current, 50/60 Hz., 120-277V, 0.67A @ 120V, 0.38A @ 208V, 0.33A @ 240V, 0.29A @ 277V;
100W:
Constant current, 50/60 Hz., 120-277V, 0.83A @ 120V, 0.48A @ 208V, 0.42A @ 240V, 0.36A @ 277V;
120W:
Constant current, 50/60 Hz., 120-277V, 1.00A @ 120V, 0.58A @ 208V, 0.50A @ 240V, 0.43A @ 277V;
150W:
Constant current, 50/60 Hz., 120-277V, 1.25A @ 120V, 0.72A @ 208V, 0.62A @ 240V, 0.54A @ 277V;
200W:
Constant current, 50/60 Hz., 120-277V, 1.67A @ 120V, 0.96A @ 208V, 0.83A @ 240V, 0.72A @ 277V;

CCT: Vailable in 4000K， 5000K & 6000K color temperature per ANSI C78.377

Dimming: 0-10V dimming, Continuous

Reflector Options: white aluminum reflector available in 7″ (180mm)height; PC reflector .

Finish: Black(standard)/Customerization.

Housing: ADC12 die-cast aluminum

Dimension

Unit:MM/INCH

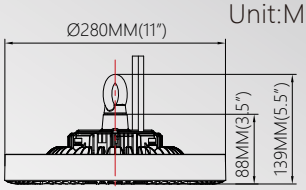

Hanging ring

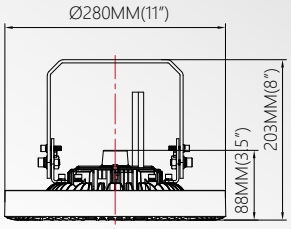

U-Bracket(Options)

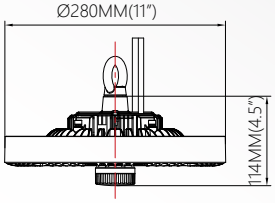

Microwave Sensor(Options)

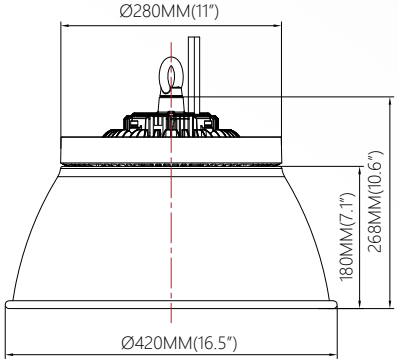

Reflector(Options)

Reflectors

Aluminum Reflector

PC Reflector

Add:4-12/F Baiyisheng Building,Baihuayuan RD,Guangming District, Shenzhen City, China
Tel:+86-755-8889388 5 Fax:+86-755-88893869 E-mail:andy@gdhgled.com
Web: www.hgledr.com

DATA SHEET						
OPTICS	Input Power (W)	80W	100W	120W	150W	200W
	Lumens Delivered @ 5000K	12,000lm	15,000lm	18,000lm	22,500lm	30,000lm
	Efficacy (lm/W)	>150lm/W				
	CRI	>80				
	IES LM-80 results and TM-21 calculations	>100,000 hours				
	CCT	Available in 4000K, 5000K & 6000K				
ELECTRICAL	Input Voltage	AC220-240V / AC120-277V ,50/60Hz				
	Max THD %	<10%				
	Power Factor	>95%				
PHYSICAL	Housing	ADC12 die-cast aluminum				
	Lens Tpye	PC				
	Weight	2.3KG(5.1LB)				2.5KG(5.5LB)
CERTIFICATION	Certification	UL listed, FCC,CE,RoHS,SAA				
	Environment	Wet location listed, IP65				
THERMAL	Operating Temperature	-40°F - 122°F (-40°C - 50°C)				
	Humidity	10% - 90% RH, non condensing				
QUALIFICATION	DesignLights Consortium	DLC 5.1 Premium				
SMART OPTIONAL		Microwave Sensor / PIR Sensor / Microwave Sensor+WiFi+Bluetooth / Remote Control				
OTHER	Warranty	5-year standard warranty				

Ordering Guide

Model: HG-HL-ABCD-EFGH-IHKLM, For example: HG-HL-150WLD-50K8022-S7BKM

Electric Character				Optics Character				Physical Character				Smart Optional
A	B	C	D	E	F	G	H	I	J	K	L	M
Rated power	Input voltage	Driver brand	Dimming	CCT	CRI	LED CHIP	Beam Angle	Dimension	Color	Installation	Lens	Sensor
80W 100W 120W 150W 200W	L-≤277V H-≥277V	Blank or 1-5	Blank-No dimmable D-Dimmable	40K-4000K 50K-5000K 60K-6000K	80-Ra80	1-10	1-60° 2-90° 3-120°	S7-max150W M7-max200W	BK-Black WH-White	Blank-Ring U-U-bracket	Blank-PC G-Glass	Blank-No sensor M-Microwave Sensor P-PIR Sensor MWB-Microwave Sensor+WiFi+Bluetooth

Add:4-12/F Baiyisheng Building,Baihuayuan RD,Guangming District, Shenzhen City, China
Tel:+86-755-8889388 65 Fax:+86-755-88893869 E-mail:andy@gdhgled.com
Web: www.hgledr.com

Smart Optional

Microwave Sensor:

1. If no Microwave Sensor is detected: after 5 seconds, the lamp will switch to off.
2. If any Microwave Sensor is detected: lamp returns to 100% output for your pre-defined hold time.
3. If you need other control modes, you can set them by remote control.

Input Voltage	Output Voltage	Output Current	Detection Angle	Max. Mounting Height	Detection Diameter at Max. Mounting Height
12V	0-10V	20mA	120º	20'	26.4'

Typical Applications: warehouses, gymnasiums, corridors, parking garages

CEILING MOUNT

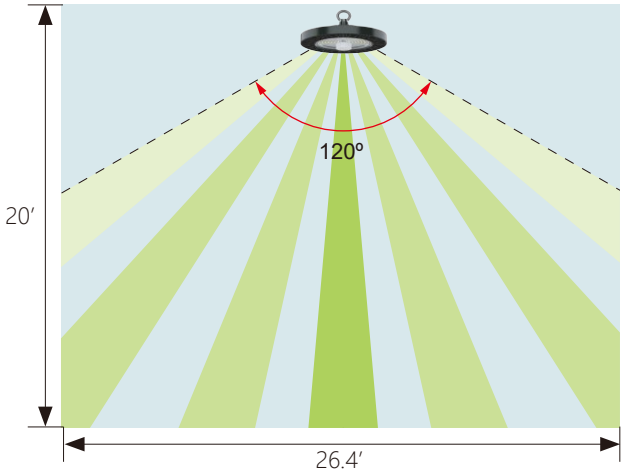

WALL MOUNT (TOP VIEW)

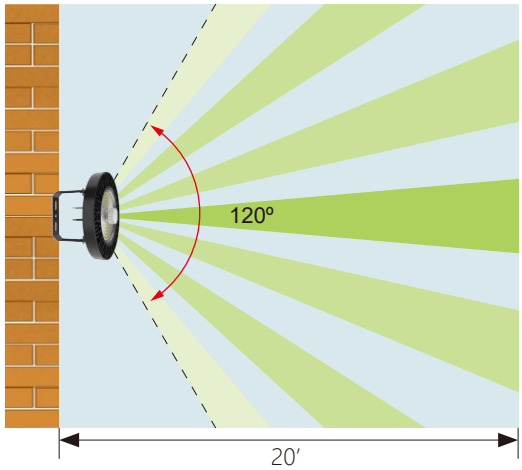

Microwave Sensor (Installation Instruction)

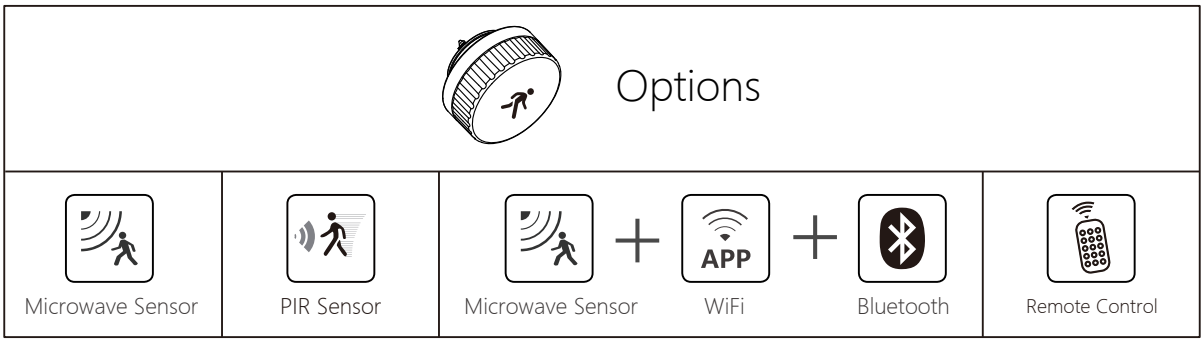

Add:4-12/F Baiyisheng Building,Baihuayuan RD,Guangming District, Shenzhen City, China
Tel:+86-755-8889388 65 Fax:+86-755-88893869 E-mail:andy@gdhgled.com
Web: www.hgledr.com

Optics

Tech.Support:

Tell us the room L,W and usage,we have an engineer team to respond the DIALUX for lights quantity and effects, IES fils are available upon request.

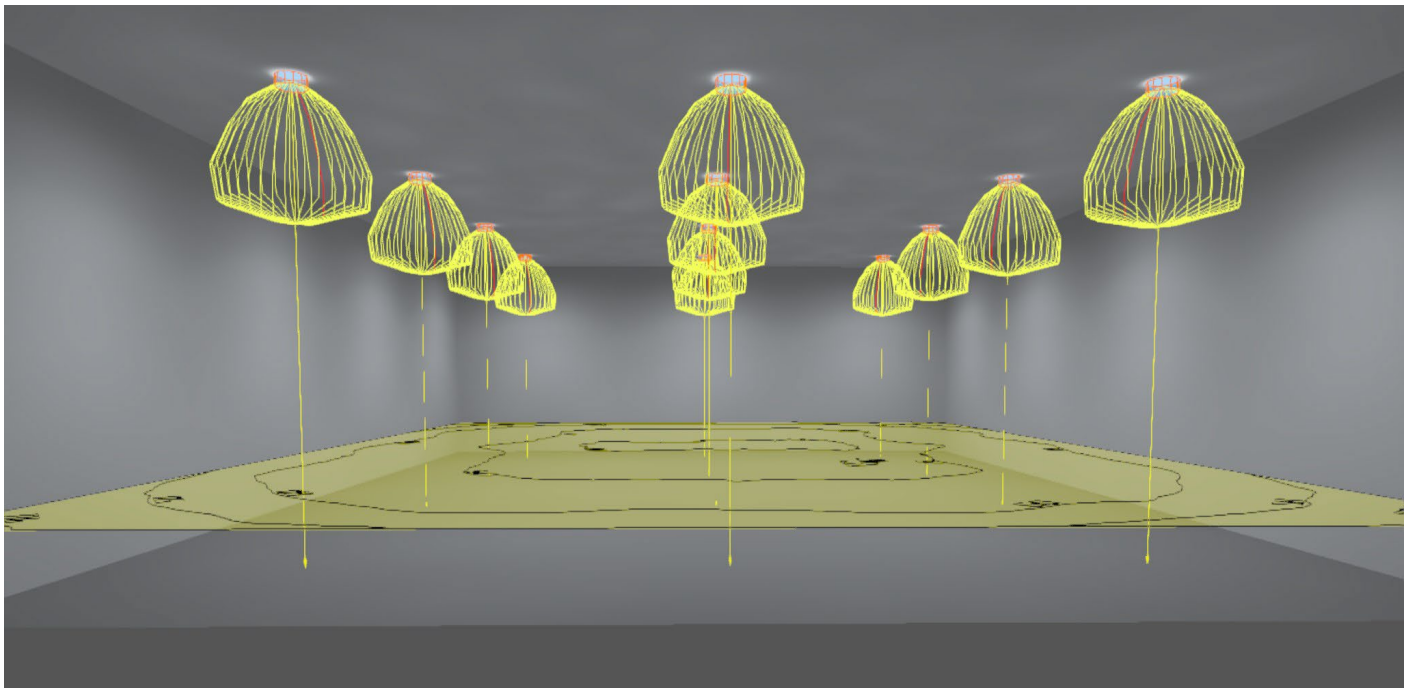

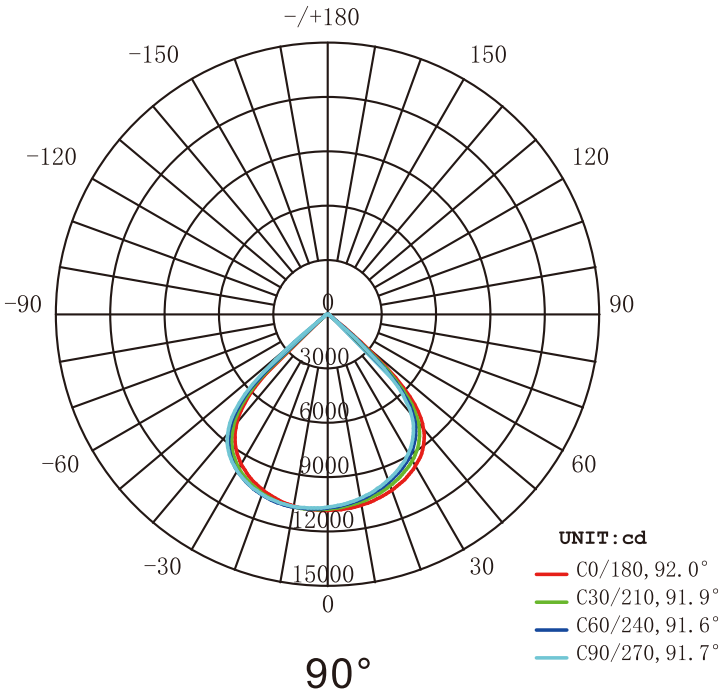

90°

Add:4-12/F Baiyisheng Building,Baihuayuan RD,Guangming District, Shenzhen City, China
Tel:+86-755-8889388 -865 Fax:+86-755-88893869 E-mail:andy@gdhgled.com
Web: www.hgledr.com

Wiring diagram

Wiring Connection
Turn off the power, connect AC wire.
Dimmer connection (With dimmable driver.)
1.Compatible with 0-10V dimming.
2.Connect wires as below.

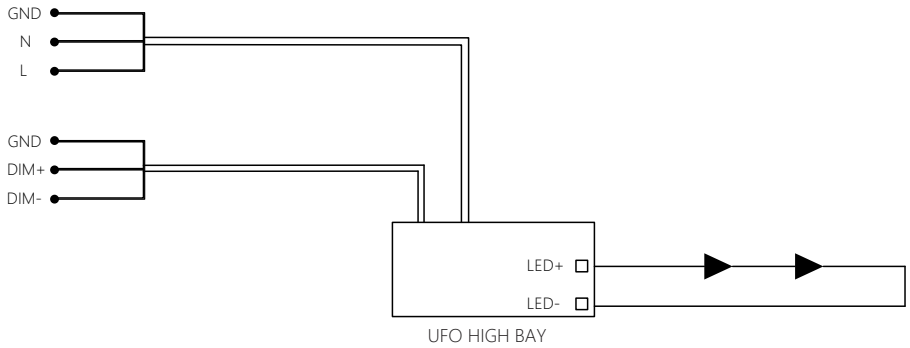

Package

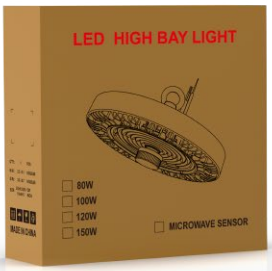

Inner box

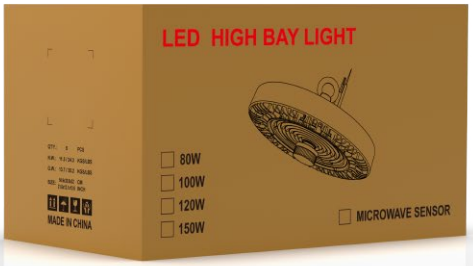

Carton

Type	Package			
Model	80W/100W/120W/150W		200W	
Packing	Inner box	Carton	Inner box	Carton
Packing QTY	1pcs/CTN	5pcs/CTN	1pcs/CTN	5pcs/CTN
CTN SIZE	292x101x298 MM 11.4x4x11.7 INCH	549x308x320 MM 21.6x12.1x12.6 INCH	292x101x298 MM 11.4x4x11.7 INCH	549x308x320 MM 21.6x12.1x12.6 INCH
N.W.	2.3KG/5.1LB	11.5KG/25.3LB	2.5KG/5.5LB	12.5KG/27.6LB
G.W.	2.6KG/5.7LB	13.7KG/30.2LB	2.8KG/6.2LB	14.7KG/32.4LB
20GP	2355CTN	471CTN	2355CTN	471CTN
40GP	4910CTN	982CTN	4910CTN	982CTN
40HQ	6085CTN	1217CTN	6085CTN	1217CTN

Inner box
H7 1PCS

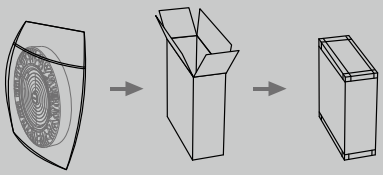

Carton
H7 5PCS

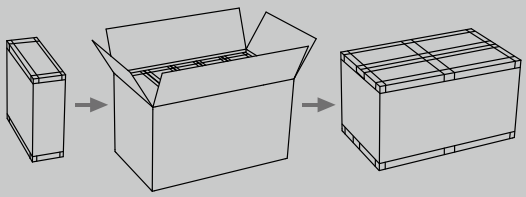

Add:4-12/F Baiyisheng Building,Baihuayuan RD,Guangming District, Shenzhen City, China
Tel:+86-755-8889388 865 Fax:+86-755-88893869 E-mail:andy@gdhgled.com
Web: www.hgledr.com

XTSL-CL SERIES Exit & Emergency Lighting

WESTGATE
THE FUTURE IS HERE...AND IT'S QUITE BRIGHT!

XTSL-CL-RW

Customer Name:

Project Name:

Note: | Type:

Selection:

Exit signs shall be provided at every exit door, at the intersection of corridors, at exit stairways or ramps and such other locations and intervals as are necessary to provide the occupants with knowledge of the various means of egress available

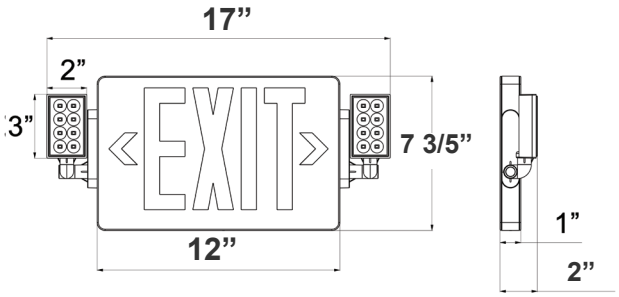

12” (W) x 7 3/5” (H) x 1” (D)

Features

- Ultra Thin Combo
- 5-Year Warranty
- Maximum 24 hours for Full Recharge Time
- Ultra Bright RED LEDs
- Built-in 3.6V 1000mAh Ni-MH Battery for Minimum 90 Minutes

Technical Specifications

Electrical:

- Voltage: 120-277V / 60Hz (Universal Voltage Operation)
- Watts: 1.2 per head
- Input Power: 2W
- AC charging current: 32mA
- Fully Automatic Solid-State, Two Rate Charger Initiates Battery Charging to Recharge a Discharged Battery in 24 hours
- 1.2V long Life, Maintenance-Free, Rechargeable Ni-MH Battery

Mechanical:

- White Finish
- Letters 6 height with 3/4 stroke
- Operating Temperature: 32º F~104ºF
- Discharge Time: ≥ 90mins
- Universal Exit: Single or Double Face — Wall (Back) or Ceiling Mount
- Injection-Molded Thermoplastic ABS Housing,UL 94V-0 Flame Rating
- Innovative,Easy Installation in Minutes

Lighting:

- Color Temperature: 1001K (AC) / 5558K (DC)
- Total Lumens: 10 LM (AC) / 326 LM (DC)
- Ultra Bright RED LEDs
- Internal Solid-State Transfer Switch Automatically Connects the Internal Battery to LED Board for Minimum 90-minute Emergency Illumination
- Charge Rate/Power “ON” LED Indicator Light and Push-to-Test Switch for mandated Code Compliance Testing

Applications:

- Ideal for every exit door, at the intersection of corridors, at exit stairways or ramps and such other locations

Other Models:

- XTSL--CL-GW

Phone: (877) 805-2252 | Fax: (877) 805-2252
www.westgatemfg.com | www.westgatecontrols.co

WG-Z6-2D-2Z

Photometrics: XTSL-CL

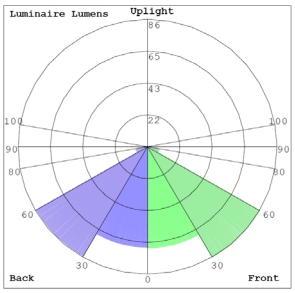

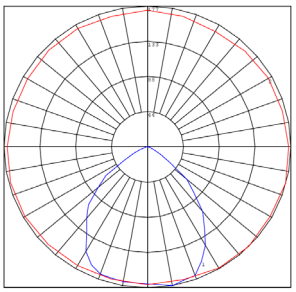

BUG Rating: B0-U1-G0

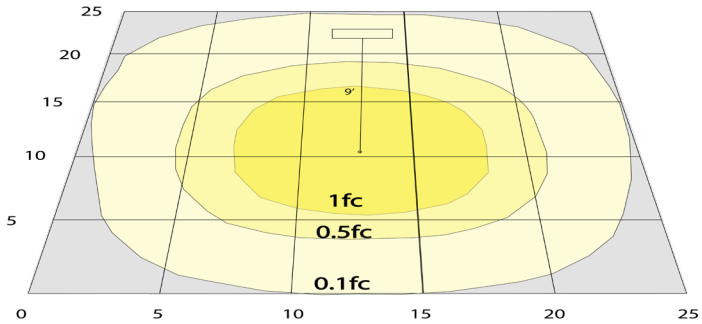

Area 25'x 25' Mounting Height: 9'

Other Views:

Side View

Front View

Back View

Performance Table: XTSL-CL

MODEL NO.	Wattage	Voltage	Lumens	Color Temp.	BUG Rating	LPW
XTSL-CL	1.2 Per Head	120~277V	10 LM (AC) 326 LM (DC)	1001K (AC) 5558K (DC)	B0-U1-G0	8(AC) 272 (DC)

Sample Ordering

Model		Combo Light		Color
XTSL	-	CL	-	RW

Other Models:

XTSL-GW

XTSL-RW

XTSL-CL-GW

Phone: (877) 805-2252 | Fax: (877) 805-2252
www.westgatemfg.com | www.westgatecontrols.co

WMX SERIES

LED OUTDOOR LIGHTING

WESTGATE
THE FUTURE IS HERE...AND IT'S QUITE BRIGHT!

WMX-LG-50-120W-30K
WMX-LG-50-120W-40K
WMX-LG-50-120W-50K

Customer Name:

Project Name:

Note: | Type:

MULTI-POWER
SELECTION:

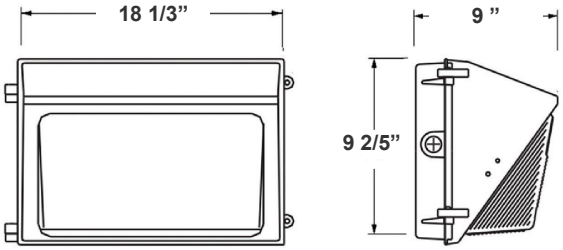

18 1/3”(W) x 9 2/5”(H) x 9”(D)

Ideal for general site lighting, alleys, loading docks, doorway, pathway, and parking areas.

Features

- ADC12 Aluminum Heat Sink, Outdoor Powder Coating
- Connect One End or Both Ends (Dual Function)
- Multi-Power Switch is inside the Fixture
- 7-year warranty
- Prismatic Borosilicate Glass Lens

Technical Specifications

Electrical:

- Input Wattage: 50/80/100/120W
- Input Voltage: 120-277V AC 50/60Hz
- Input current: 1.4 A
- Power factor: >0.9
- Efficacy: 130 LPW

Mechanical:

- ADC12 Aluminum Heat Sink, Outdoor Powder Coating
- Lens: Prismatic Borosilicate Glass Lens
- Same Footprint as Traditional HID Wall Packs
- Four 1/2” Hubs: 1 top. 1 on Each Side, 1 Rear
- Mounting: Wall Mounting
- Operating Temperature: -40°F ~ 104°F
- Lifespan: 70000 Hrs.
- IP rating: IP65, Wet Locations

Lighting:

- Dimming: 0-10V Dimming
- Chip: Lumileds LEDs
- Multi-Power Switch is inside the Fixture
- Total Lumens: 16500LM Max.
- Color Temperature: 3000K/4000K/5000K
- CRI: >70

Applications:

- Ideal for general site lighting, alleys, loading docks, doorway, pathway and parking areas.
- Replace existing HID wall packs
- Great for use with photocell

Other Models:

- 50W | 6800LM | WMX-MD-20-50W-30K
- 50W | 6800LM | WMX-MD-20-50W-40K
- 50W | 6800LM | WMX-MD-20-50W-50K
- 30W | 4200LM | WMX-SM-15-30W-30K
- 30W | 4200LM | WMX-SM-15-30W-40K
- 30W | 4200LM | WMX-SM-15-30W-50K
- 80W | 11200LM | WMX-MD-20-80W-30K
- 80W | 11200LM | WMX-MD-20-80W-40K
- 80W | 11200LM | WMX-MD-20-80W-50K

LISTED DLC DIMMING IP65 WET LOCATION

Phone: (877) 805-2252 | Fax: (877) 805-2252
www.westgatemfg.com | www.westgatecontrols.co

WG-ZC-2D-2Z

Photometrics: WMX-LG-50-120W

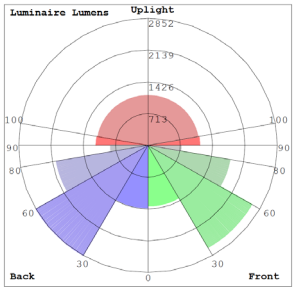

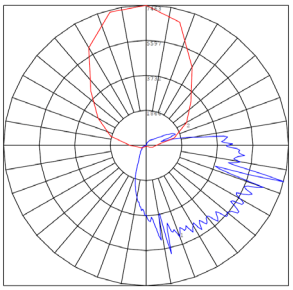

BUG Rating: B3-U5-G4

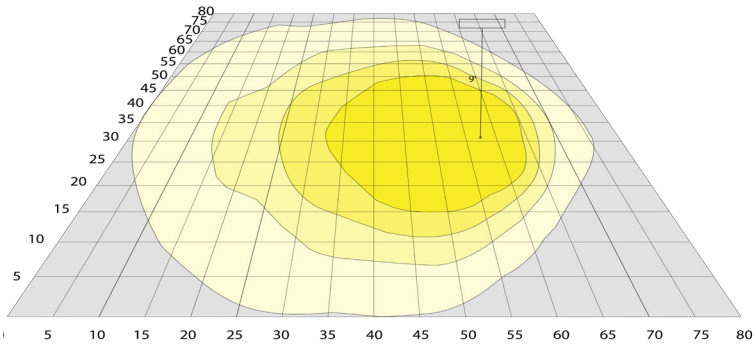

Area 80'x 80' Mounting Height: 9'

Other Views:

Side View

Front View

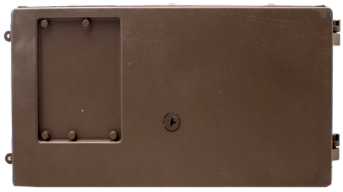

Back View

Performance Table: WMX-LG-50-120W

MODEL NO.	Wattage	Voltage	Lumens	Color Temp.	BUG Rating	LPW
WMX-LG-50-120W-30K	50W	120-277V	7000LM	3000K 4000K 5000K	B3-U5-G4	130
			7150LM			
			7300LM			
WMX-LG-50-120W-40K	80W		10500LM			
			10900LM			
			11300LM			
	100W		13100LM			
			13600LM			
			14100LM			
WMX-LG-50-120W-50K	120W		15300LM			
			15900LM			
			16500LM			

Phone: (877) 805-2252 | Fax: (877) 805-2252
www.westgatemfg.com | www.westgatecontrols.co

Sample Ordering

Model		Size		Min. Watt		Max. Watt		Color Temp.
WMX	-	LG	-	50	-	120W	-	

30K = 3000K
40K = 4000K
50K = 5000K

Accessories:

Blank = No Option For Accessories
WML-SH3= SHIELD FOR WMXPRO 120W

Factory-Installed Options:

Blank = No Option For Accessories
OPT-EM-OD3INT= INTERNAL EMERGENCY BACKUP BATTERY
OPT-SEN-3MRLV-5= PROGRAMMABLE MICROWAVE (BI-LEVEL FOR 80W & UP)
OPT-PC-B= BUTTON
OPT-CLR-85= COLOR PAINT
WEC-8RC= REMOTE CONTROL
OPT-TRS-T20= TAMPER RESISTANT SCREW

ACCESSORY:

WML-SH3

FACTORY-INSTALLED OPTIONS:

OPT-EM-OD3INT

OPT-PC-B

WEC-8RC

OPT-SEN-3MRLV-5

Example:

1. **WMX-LG-50-120W-50K** (FOR 120W MAX 50K FIXTURE 120-277V)

2. **WMX-LG-50-120W-50K**
   OPT-EM-OD3INT (FOR 120W MAX 50K FIXTURE 120-277V)
   (INTERNAL EMERGENCY BACKUP BATTERY)

Dimensions:

WML-SH3
SHIELD FOR WMXPRO 120W

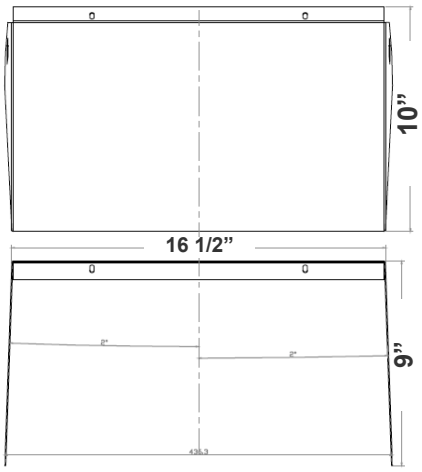

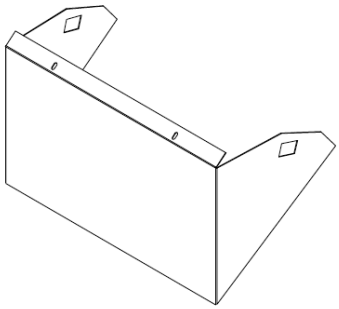

Phone: (877) 805-2252 | Fax: (877) 805-2252
www.westgatemfg.com | www.westgatecontrols.co

SAN JOAQUIN
FIRE PROTECTION INC
CA Lic. #775461
5957 E. Harvard • Fresno, CA 93727 • (559) 292-7111 • Fax (559) 292-7211

Guarantee/Warranty

Guarantee/Warranty for SAN JOAQUIN FIRE PROTECTION INC.
We hereby warrant and guarantee that the FIRE SPRINKLERS which we have installed in the 21016 MADERA INDUSTRIAL WAREHOUSE , 3325, 335, 345, & 355 SOUTH SCHNOOR AVE., MADERA, CA. 93637 has been done in accordance with the drawings and specifications and that the work as installed will fulfill the requirements of the guarantee/warranty included in the specifications. We agree to repair or replace any or all of our work, together with any other adjacent work which may be displaced by so doing, that may prove to be defective in its workmanship or materials within a period of ONE (1) year from the date of acceptance of the above named structure by the owner, without any expense whatsoever to said owner, except for normal wear and tear and unusual abuse or neglect.

In the event of a failure to comply with the above mentioned conditions within ten (10) days after being notified in writing by the Owner or General Contractor, we collectively or separately do hereby authorize the Owner or General Contractor to proceed to have said defects repaired and corrected at our expense and we will honor and pay the costs and charges therefore upon demand.

The date of filing the Notice of Completion, 4/24/2023 will be considered the date of acceptance for the purpose of guarantees required, unless otherwise stated in the contract documents.

Signed: Greg R. Sani Date: 4/24/2023

Countersigned: _____ Date: _____

Automatic Sprinkler Systems

Contractor's Material and Test Certificate for Aboveground Piping

PROCEDURE

Upon completion of work, inspection and tests shall be made by the contractor's representative and witnessed by an owner's representative. All defects shall be corrected and system left in service before contractor's personnel finally leave the job.

A certificate shall be filled out and signed by both representatives. Copies shall be prepared for approving authorities, owners, and contractor. It is understood the owner's representative's signature in no way prejudices any claim against contractor for faulty material, poor workmanship, or failure to comply with approving authority's requirements or local ordinances.

Property Name: MADERA INDUSTRIAL WAREHOUSE BLDG. B **Date:** 4/11/23

Property Address: 335 S. SCHNOOR AVE., MADERA, CA. 93637

Plans	Accepted by approving authorities (names) CITY OF MADERA		
	Address 205 W. FORTH STREET, MADERA, CA. 93637		
	Installation conforms to accepted plans	☒ Yes	☐ No
	Equipment used is approved. If no, explain deviations	☒ Yes	☐ No
Instructions	Has person in charge of fire equipment been instructed as to location of control valves and care and maintenance of this new equipment?	☒ Yes	☐ No
	If no, explain		
	Have copies of the following been left on the premises?	☒ Yes	☐ No
	1. System components instructions	☒ Yes	☐ No
	2. Care and maintenance instructions	☒ Yes	☐ No
	3. NFPA 25	☒ Yes	☐ No
Location of system	Supplies buildings BUILDING B		

Sprinklers

Make	Model	Year of manufacture	Orifice size	Quantity	Temperature rating
VICTAULIC	V3401	2021	¾"	304	200
VICTAULIC	V3401	2021	¾"	38	155

Pipe and fittings

Type of pipe SHC. 40 THREADED & SCH. 10 GROOVED

Type of fittings D.I. THREADED AND GROOVED FITTINGS

	Alarm device			Maximum time to operate through test connection	
Alarm valve or flow indicator	**Type**	**Make**	**Model**	**Minutes**	**Seconds**
	FLOW SWITCH	POTTER	VSR-4	0	40

Dry pipe operating test

Dry valve				Q.O.D		
Make	**Model**	**Serial No.**		**Make**	**Model**	**Serial No.**

	Time to trip through test connection[1,2]		Water pressure	Air pressure	Trip point air pressure	Time water reached test outlet[1,2]		Alarm operated properly	
	Minutes	**Seconds**	**psi**	**psi**	**psi**	**min.**	**sec.**	**Yes**	**No**
Without Q.O.D								☐	☐
With Q.O.D								☐	☐

If no explain: _____

Deluge and preaction valves

Operation ☐ Pneumatic ☐ Electric ☐ Hydraulic

Piping supervised ☐ Yes ☐ No Detecting media supervised ☐ Yes ☐ No

Does valve operate from the manual trip, remote, or both control ☐ Yes ☐ No

Is there an accessible facility in each circuit for testing? ☐ Yes ☐ No

If no, explain _____

Make _____ Model _____

Does each circuit operate supervision loss alarm? ☐ Yes ☐ No

Does each circuit operate valve release? ☐ Yes ☐ No

Maximum time to operate release _____ Minutes _____ Seconds

Pressure reducing valve test

Location and floor _____

Make and model _____

Setting _____

Static pressure		Residual pressure (flowing)		Flow rate
Inlet (psi)	Outlet (psi)	Inlet (psi)	Outlet (psi)	Flow (gpm)

Test description

Hydrostatic: Hydrostatic tests shall be made at not less than 200 psi (13.6 bar) for 2 hours or 50 psi (3.4 bar) above static pressure excess of 150 psi (10.2 bar) for 2 hours. Differential dry-pipe clappers shall be left open during the test to prevent damage. All aboveground piping leakage shall be stopped.

Pneumatic: Establish 40 psi (2.7 bar) air pressure and measure drop, which shall not exceed 1½ psi (0.1 bar) in 24 hours. Test pressure tanks at normal water level and air pressure and measure air pressure drop, which shall not exceed 1½ psi (0.1 bar) in 24 hours.

[1] Measured from time inspector's test connection is opened
[2] NFPA 13 only requires the 60-second limitation in specific sections

Tests	All piping hydrostatically tested at (200 bar) for 2 hours If no, state reason _____ Dry piping pneumatically ☐ Yes ☐ No Equipment operates ☐ Yes ☐ No		
	Do you certify as the sprinkler contractor that additives and corrosive chemicals, sodium silicate or derivatives of sodium silicate, brine, or other corrosive chemicals were not used for testing systems or stopping leaks?	☒ Yes	☐ No
	Drain test: Reading of cutoff gauge located near water supply test connection: 45 psi (_____ bar) Residual pressure with valve in test connection open wide: 40 psi (_____ bar) Underground mains and lead-in connections to system risers flushed before connection made to sprinkler piping Verified by copy of the Contractor's Material and Test Certificate for Underground Piping ☐ Yes ☐ No ☒ Other Explain: Flushed by installer of underground sprinkler piping	☒ Yes	☐ No
	If powder-driven fasteners are used in concrete, has representative sample testing been satisfactorily completed? If no, explain _____	☒ Yes	☐ No
Blank testing gaskets	Number used: 1 / Locations: BASE OF RISER / Number removed: 1		
Welding	Welding piping ☒ Yes ☐ No If yes . . .		
	Do you certify as the sprinkler contractor that welding procedures used complied with the minimum requirements of AWS B2.1, ASME Section IX *Welding and Brazing Qualifications*, or other applicable qualification standard as required by the AHJ?	☒ Yes	☐ No
	Do you certify that the welding was performed by welders or welding operators qualified in accordance with the minimum requirements of AWS B2.1, ASME section IX *Welding and Brazing Qualifications*, or other applicable qualification standard as required by the AHJ?	☒ Yes	☐ No
	Do you certify that the welding was conducted in compliance with a documented quality control procedure to ensure that (1) all discs are retrieved; (2) that openings in piping are smooth, that slag and other welding residue are removed; (3) the internal diameters of piping are not penetrated; (4) completed welds are free from cracks, incomplete fusion, surface porosity greater than $^{1}/_{16}$ in. diameter, undercut deeper than the lesser of 25% of the wall thickness or $^{1}/_{32}$ in.; and (5) completed circumferential butt weld reinforcement does not exceed $^{3}/_{32}$ in.?	☒ Yes	☐ No
Cutouts (discs)	Do you certify that you have a control feature to ensure that all cutouts (discs) are retrieved?	☒ Yes	☐ No
Hydraulic data nameplate	Nameplate provided If no, explain	☒ Yes	☐ No
Remarks	Date left in service with all control valves open 4/11/23		

Form 4

Signatures	Name of sprinkler contractor SAN JOAQUIN FIRE PROTECTION, INC.		
	Tests witnessed by		
	The property owner or their authorized agent (signed)	Title	Date
	For sprinkler contractor (signed) Greg A. Sani	Title PRESIDENT	Date 4/11/23

Additional explanations and notes:

Automatic Sprinkler Systems

Contractor's Material and Test Certificate for Aboveground Piping

PROCEDURE

Upon completion of work, inspection and tests shall be made by the contractor's representative and witnessed by an owner's representative. All defects shall be corrected and system left in service before contractor's personnel finally leave the job.

A certificate shall be filled out and signed by both representatives. Copies shall be prepared for approving authorities, owners, and contractor. It is understood the owner's representative's signature in no way prejudices any claim against contractor for faulty material, poor workmanship, or failure to comply with approving authority's requirements or local ordinances.

Property Name: MADERA INDUSTRIAL WAREHOUSE BLDG. C **Date:** 4/11/23

Property Address: 345 S. SCHNOOR AVE., MADERA, CA. 93637

Plans	Accepted by approving authorities (names) CITY OF MADERA		
	Address 205 W. FORTH STREET, MADERA, CA. 93637		
	Installation conforms to accepted plans	☒ Yes	☐ No
	Equipment used is approved. If no, explain deviations	☒ Yes	☐ No
Instructions	Has person in charge of fire equipment been instructed as to location of control valves and care and maintenance of this new equipment?	☒ Yes	☐ No
	If no, explain		
	Have copies of the following been left on the premises?	☒ Yes	☐ No
	1. System components instructions	☒ Yes	☐ No
	2. Care and maintenance instructions	☒ Yes	☐ No
	3. NFPA 25	☒ Yes	☐ No
Location of system	Supplies buildings BUILDING C		

Sprinklers

Make	Model	Year of manufacture	Orifice size	Quantity	Temperature rating
VICTAULIC	V3401	2021	¾"	288	200
VICTAULIC	V3401	2021	¾"	36	155

Pipe and fittings

Type of pipe SHC. 40 THREADED & SCH. 10 GROOVED

Type of fittings D.I. THREADED AND GROOVED FITTINGS

	Alarm device			Maximum time to operate through test connection	
Alarm valve or flow indicator	**Type**	**Make**	**Model**	**Minutes**	**Seconds**
	FLOW SWITCH	POTTER	VSR-4	0	40

	Dry valve				Q.O.D				
Dry pipe operating test	**Make**		**Model**	**Serial No.**	**Make**	**Model**		**Serial No.**	
		Time to trip through test connection[1,2]		**Water pressure**	**Air pressure**	**Trip point air pressure**	**Time water reached test outlet[1,2]**		**Alarm operated properly**
		Minutes	**Seconds**	**psi**	**psi**	**psi**	**min.**	**sec.**	**Yes** / **No**
	Without Q.O.D								☐ ☐
	With Q.O.D								☐ ☐
	If no explain:								

Deluge and preaction valves

Operation ☐ Pneumatic ☐ Electric ☐ Hydraulic

Piping supervised ☐ Yes ☐ No Detecting media supervised ☐ Yes ☐ No

Does valve operate from the manual trip, remote, or both control ☐ Yes ☐ No

Is there an accessible facility in each circuit for testing? ☐ Yes ☐ No

If no, explain _____

Make _____ Model _____

Does each circuit operate supervision loss alarm? ☐ Yes ☐ No

Does each circuit operate valve release? ☐ Yes ☐ No

Maximum time to operate release _____ Minutes _____ Seconds

Pressure reducing valve test		Static pressure		Residual pressure (flowing)		Flow rate
	Location and floor _____	Inlet (psi)	Outlet (psi)	Inlet (psi)	Outlet (psi)	Flow (gpm)
	Make and model _____					
	Setting _____					

Test description

Hydrostatic: Hydrostatic tests shall be made at not less than 200 psi (13.6 bar) for 2 hours or 50 psi (3.4 bar) above static pressure excess of 150 psi (10.2 bar) for 2 hours. Differential dry-pipe clappers shall be left open during the test to prevent damage. All aboveground piping leakage shall be stopped.

Pneumatic: Establish 40 psi (2.7 bar) air pressure and measure drop, which shall not exceed 1½ psi (0.1 bar) in 24 hours. Test pressure tanks at normal water level and air pressure and measure air pressure drop, which shall not exceed 1½ psi (0.1 bar) in 24 hours.

[1] Measured from time inspector's test connection is opened
[2] NFPA 13 only requires the 60-second limitation in specific sections

Tests	All piping hydrostatically tested at (200 bar) for 2 hours If no, state reason _____ Dry piping pneumatically ☐ Yes ☐ No Equipment operates ☐ Yes ☐ No		
	Do you certify as the sprinkler contractor that additives and corrosive chemicals, sodium silicate or derivatives of sodium silicate, brine, or other corrosive chemicals were not used for testing systems or stopping leaks?	☒ Yes	☐ No
	Drain test: Reading of cutoff gauge located near water supply test connection: 45 psi (_____ bar) Residual pressure with valve in test connection open wide: 40 psi (_____ bar) Underground mains and lead-in connections to system risers flushed before connection made to sprinkler piping Verified by copy of the Contractor's Material and Test Certificate for Underground Piping ☐ Yes ☐ No ☒ Other Explain:		
	Flushed by installer of underground sprinkler piping	☒ Yes	☐ No
	If powder-driven fasteners are used in concrete, has representative sample testing been satisfactorily completed? If no, explain _____	☒ Yes	☐ No
Blank testing gaskets	Number used: 1	Locations: BASE OF RISER	Number removed: 1
Welding	Welding piping ☒ Yes ☐ No If yes . . .		
	Do you certify as the sprinkler contractor that welding procedures used complied with the minimum requirements of AWS B2.1, ASME Section IX *Welding and Brazing Qualifications*, or other applicable qualification standard as required by the AHJ?	☒ Yes	☐ No
	Do you certify that the welding was performed by welders or welding operators qualified in accordance with the minimum requirements of AWS B2.1, ASME section IX *Welding and Brazing Qualifications*, or other applicable qualification standard as required by the AHJ?	☒ Yes	☐ No
	Do you certify that the welding was conducted in compliance with a documented quality control procedure to ensure that (1) all discs are retrieved; (2) that openings in piping are smooth, that slag and other welding residue are removed; (3) the internal diameters of piping are not penetrated; (4) completed welds are free from cracks, incomplete fusion, surface porosity greater than $^{1}/_{16}$ in. diameter, undercut deeper than the lesser of 25% of the wall thickness or $^{1}/_{32}$ in.; and (5) completed circumferential butt weld reinforcement does not exceed $^{3}/_{32}$ in.?	☒ Yes	☐ No
Cutouts (discs)	Do you certify that you have a control feature to ensure that all cutouts (discs) are retrieved?	☒ Yes	☐ No
Hydraulic data nameplate	Nameplate provided If no, explain	☒ Yes	☐ No
Remarks	Date left in service with all control valves open 4/11/23		

Form 4

Signatures	Name of sprinkler contractor SAN JOAQUIN FIRE PROTECTION, INC.		
	Tests witnessed by		
	The property owner or their authorized agent (signed)	Title	Date
	For sprinkler contractor (signed) Greg C. Sani	Title PRESIDENT	Date 4/11/23

Additional explanations and notes:

Automatic Sprinkler Systems

Contractor's Material and Test Certificate for Aboveground Piping

PROCEDURE

Upon completion of work, inspection and tests shall be made by the contractor's representative and witnessed by an owner's representative. All defects shall be corrected and system left in service before contractor's personnel finally leave the job.

A certificate shall be filled out and signed by both representatives. Copies shall be prepared for approving authorities, owners, and contractor. It is understood the owner's representative's signature in no way prejudices any claim against contractor for faulty material, poor workmanship, or failure to comply with approving authority's requirements or local ordinances.

Property Name: MADERA INDUSTRIAL WAREHOUSE BLDG. D **Date:** 4/11/23

Property Address: 355 S. SCHNOOR AVE., MADERA, CA. 93637

Plans	Accepted by approving authorities (names) CITY OF MADERA		
	Address 205 W. FORTH STREET, MADERA, CA. 93637		
	Installation conforms to accepted plans	☒ Yes	☐ No
	Equipment used is approved. If no, explain deviations	☒ Yes	☐ No
Instructions	Has person in charge of fire equipment been instructed as to location of control valves and care and maintenance of this new equipment?	☒ Yes	☐ No
	If no, explain		
	Have copies of the following been left on the premises?	☒ Yes	☐ No
	1. System components instructions	☒ Yes	☐ No
	2. Care and maintenance instructions	☒ Yes	☐ No
	3. NFPA 25	☒ Yes	☐ No
Location of system	Supplies buildings BUILDING D		

Sprinklers

Make	Model	Year of manufacture	Orifice size	Quantity	Temperature rating
VICTAULIC	V3401	2021	¾"	288	200
VICTAULIC	V3401	2021	¾"	36	155

Pipe and fittings	Type of pipe SHC. 40 THREADED & SCH. 10 GROOVED
	Type of fittings D.I. THREADED AND GROOVED FITTINGS

	Alarm device			Maximum time to operate through test connection	
Alarm valve or flow indicator	**Type**	**Make**	**Model**	**Minutes**	**Seconds**
	FLOW SWITCH	POTTER	VSR-4	0	40

	Dry valve				Q.O.D				
Dry pipe operating test	**Make**		**Model**	**Serial No.**	**Make**	**Model**		**Serial No.**	
		Time to trip through test connection[1,2]		**Water pressure**	**Air pressure**	**Trip point air pressure**	**Time water reached test outlet[1,2]**		**Alarm operated properly**
		Minutes	**Seconds**	**psi**	**psi**	**psi**	**min.**	**sec.**	**Yes** / **No**
	Without Q.O.D								☐ ☐
	With Q.O.D								☐ ☐

If no explain: _____

Deluge and preaction valves

Operation ☐ Pneumatic ☐ Electric ☐ Hydraulic

Piping supervised ☐ Yes ☐ No Detecting media supervised ☐ Yes ☐ No

Does valve operate from the manual trip, remote, or both control ☐ Yes ☐ No

Is there an accessible facility in each circuit for testing? ☐ Yes ☐ No

If no, explain _____

Make _____ Model _____

Does each circuit operate supervision loss alarm? ☐ Yes ☐ No

Does each circuit operate valve release? ☐ Yes ☐ No

Maximum time to operate release _____ Minutes _____ Seconds

Pressure reducing valve test

Location and floor	Static pressure		Residual pressure (flowing)		Flow rate
Make and model	Inlet (psi)	Outlet (psi)	Inlet (psi)	Outlet (psi)	Flow (gpm)
Setting					

Test description

Hydrostatic: Hydrostatic tests shall be made at not less than 200 psi (13.6 bar) for 2 hours or 50 psi (3.4 bar) above static pressure excess of 150 psi (10.2 bar) for 2 hours. Differential dry-pipe clappers shall be left open during the test to prevent damage. All aboveground piping leakage shall be stopped.

Pneumatic: Establish 40 psi (2.7 bar) air pressure and measure drop, which shall not exceed 1½ psi (0.1 bar) in 24 hours. Test pressure tanks at normal water level and air pressure and measure air pressure drop, which shall not exceed 1½ psi (0.1 bar) in 24 hours.

[1] Measured from time inspector's test connection is opened
[2] NFPA 13 only requires the 60-second limitation in specific sections

Tests	All piping hydrostatically tested at (200 bar) for 2 hours If no, state reason _____ Dry piping pneumatically ☐ Yes ☐ No Equipment operates ☐ Yes ☐ No		
	Do you certify as the sprinkler contractor that additives and corrosive chemicals, sodium silicate or derivatives of sodium silicate, brine, or other corrosive chemicals were not used for testing systems or stopping leaks?	☒ Yes	☐ No
	Drain test: Reading of cutoff gauge located near water supply test connection: 45 psi (_____ bar) Residual pressure with valve in test connection open wide: 40 psi (_____ bar) Underground mains and lead-in connections to system risers flushed before connection made to sprinkler piping Verified by copy of the Contractor's Material and Test Certificate for Underground Piping ☐ Yes ☐ No ☒ Other Explain: Flushed by installer of underground sprinkler piping	☒ Yes	☐ No
	If powder-driven fasteners are used in concrete, has representative sample testing been satisfactorily completed? If no, explain _____	☒ Yes	☐ No

Blank testing gaskets	Number used 1	Locations BASE OF RISER	Number removed 1

Welding	Welding piping ☒ Yes ☐ No If yes . . .		
	Do you certify as the sprinkler contractor that welding procedures used complied with the minimum requirements of AWS B2.1, ASME Section IX *Welding and Brazing Qualifications*, or other applicable qualification standard as required by the AHJ?	☒ Yes	☐ No
	Do you certify that the welding was performed by welders or welding operators qualified in accordance with the minimum requirements of AWS B2.1, ASME section IX *Welding and Brazing Qualifications*, or other applicable qualification standard as required by the AHJ?	☒ Yes	☐ No
	Do you certify that the welding was conducted in compliance with a documented quality control procedure to ensure that (1) all discs are retrieved; (2) that openings in piping are smooth, that slag and other welding residue are removed; (3) the internal diameters of piping are not penetrated; (4) completed welds are free from cracks, incomplete fusion, surface porosity greater than $^{1}/_{16}$ in. diameter, undercut deeper than the lesser of 25% of the wall thickness or $^{1}/_{32}$ in.; and (5) completed circumferential butt weld reinforcement does not exceed $^{3}/_{32}$ in.?	☒ Yes	☐ No
Cutouts (discs)	Do you certify that you have a control feature to ensure that all cutouts (discs) are retrieved?	☒ Yes	☐ No
Hydraulic data nameplate	Nameplate provided If no, explain	☒ Yes	☐ No
Remarks	Date left in service with all control valves open 4/11/23		

Form 4

Signatures	Name of sprinkler contractor SAN JOAQUIN FIRE PROTECTION, INC.		
	Tests witnessed by		
	The property owner or their authorized agent (signed)	Title	Date
	For sprinkler contractor (signed) Greg C. Sani	Title PRESIDENT	Date 4/11/23

Additional explanations and notes:

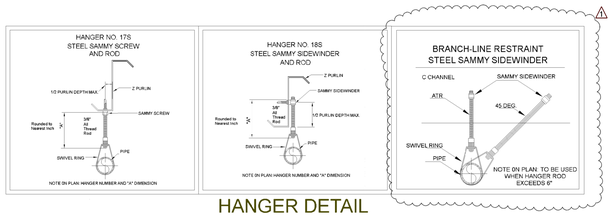

HANGER DETAIL

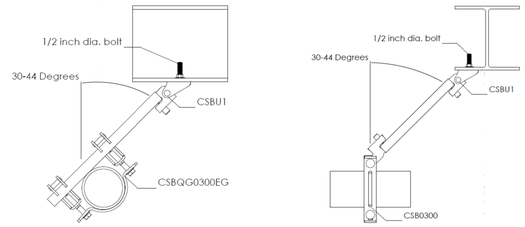

Steel (I-Beam shown, C Purlin and Z Purlin Similar) **Steel (I-Beam shown, C Purlin and Z Purlin Similar)**

BRACE DETAIL

PROJECT DATA:

1. Project Address - 325, 345, 335, & 355 S. Schnoor Ave.
2. Occupancy Group - S1 / B Sprinklered
3. Square Footage of Buildings
   - Building "A" - 325 S. Schnoor Ave., 37,500 S.F.
   - Building "B" - 345 S. Schnoor Ave. 37,500 S.F.
   - Building "C" - 335 S. Schnoor Ave. 35,100 S.F.
   - Building "D" - 355 S. Schnoor Ave. 35,100 S.F.
   - Total S.F. 145,200 S.F.
4. Construction Type - II-B Sprinklered
5. Number of Stories - 1
6. Code Edition N.F.P.A. #13, 2016 Edition
7. Hazard Group - Ordinary Hazard
8. A.P.N. No.

GENERAL NOTES

1. ALL INSTALLATION SHALL BE PER N.F.P.A. 13, 2016 EDITION.
2. ALL MATERIALS & INSTALLATIONS OF THIS AUTOMATIC FIRE SPRINKLER SYSTEM TO CONFORM TO N.F.P.A. & BE APPROVED BY THE LOCAL FIRE PREVENTION HAVING AUTHORITY.
3. EARTHQUAKE BRACING TO BE PER N.F.P.A. STANDARD.
4. PROVIDE SPARE HEAD CABINET WITH SPARE HEADS AND WRENCH.
5. LOW POINTS SHALL HAVE PROVISIONS FOR PROPER DRAINAGE.
6. SYSTEM SHALL BE HYDROSTATIC TESTED @ 200 P.S.I. FOR 2 HOURS.
7. PIPE SIZING PER: HYDRAULIC CALCULATIONS.
8. FIRE DEPT CONNECTION SHALL BE COMPATIBLE WITH LOCAL FIRE DEPARTMENT.
9. THREADED PIPING USED 1" TO 2" TO BE EDDY THREAD STEEL WITH THREADED ENDS & DUCTILE OR CAST FITTINGS.
10. WELDED PIPING USED TO BE EDDY FLOW WITH GROOVED ENDS.
11. INSTALL PROPER SIGNAGE AS REQUIRED BY N.F.P.A. 13.
12. OUTSIDE BELL TO HAVE 911 EMERGENCY SIGN.
13. 24 HOUR SUPERVISION TO BE PROVIDED BY OTHERS.
14. ALL ELECTRICAL WORK BY OTHERS.
15. FIRE ALARMS AND MANUAL PULL STATIONS BY OTHERS. FIRE ALARM DRAWINGS SHALL BE BY OTHERS.
16. ALL PAINTING BY OTHERS.
17. UNDERGROUND SHALL BE FLUSHED BY THE INSTALLING CONTRACTOR AND WRITTEN DOCUMENTATION PRIER TO CONNECTION TO OVERHEAD SYSTEM.
18. ALL ARM-OVERS TO BE 1" UNLESS NOTED OTHERWISE.
19. STORAGE LIMITED TO 12 FEET WITH MINIMUM 18 INCHES FROM PENDENT SPRINKLER DEFLECTOR TO TOP OF STORAGE. (SEE PARTS WAREHOUSE DESIGN CRITERIA).
20. IT IS THE CONTRACTOR'S RESPONSIBILITY TO MAKE WORK AVAILABLE FOR INSPECTIONS.
21. A COPY OF THE PERMANENT AND DURABLE GENERAL INFORMATION SIGN TO BE DISPLAYED PER NFPA 13, SECTION 25.6 OR A NOTE AS FOLLOWS: "A PERMANENT AND DURABLE GENERAL INFORMATION SIGN PER NFPA 13, SECTION 25.6 SHALL BE INSTALLED IN ADDITION TO THE HYDRAULIC DESIGN INFORMATION SIGN".
22. AN APPROVED PLAN SET SHALL BE ON SITE DURING ANY FIRE DEPARTMENT INSPECTION.
23. MECHANICAL TEES TEES SHALL HAVE COUPON HOLES WITHIN SIX INCHES OF TEE.
24. TRAPPED WATER: NFPA 13 2016 EDITION, 8.16.2.5.2.3 LESS THAN 5 GAL.
    (3) WHERE FLEXABLE COUPLINGS OR OTHER EASILY SEPERATED CONNECTIONS ARE USED A NIPPLE AND CAP OR PLUG SHALL BE OMITTED.
    [illegible]

UNDERGROUND NOTES

UNDERGROUND PIPING BY UNDERGROUND CONTRACTOR AND NOT PART OF THIS SUBMITTAL. ALL UNDERGROUND SHOWN ON THIS PLAN IS FOR REFERENCE ONLY.

1. ALL MATERIALS & INSTALLATIONS TO BE U.L. LISTED & SHALL CONFIRM TO NFPA PAMPLETS 13 & 24 2016 EDITION
2. THRUST BLOCKS TO CONFIRM TO NFPA 24.
3. ALL WATER LINES FOR FIRE SPRINKLER SYSTEM SHALL BE TESTED AT 200 P.S.I. FOR 2 HRS. MINIMUM.
4. DUCTILE IRON PIPE SHALL BE USED WHEN PIPE PASSES UNDER BUILDING FOUNDATION, UNDER FOOTING.
5. PLASTIC PIPE SHALL BE C-900 DR-18/CLASS 150.
6. UNDERGROUND SHALL BE FLUSHED PER NFPA 24 BEFORE CONNECTING TO OVERHEAD FIRE SPRINKLER SYSTEM PIPING.
7. NOT USED

REMOTE AREA #1 BUILDING "A"

COMPANY PRINT NO. FP - 3 DATED 11/13/2021
FOR MADERA INDUSTRIAL WAREHOUSE BLDG. A, B, C, & D
AT 325 S. SCHNOOR AVE. CONTRACT NO. 21016
IS DESIGNED TO DISCHARGE AT A RATE OF 20 GPM
(L/min) PER SQFT (m2) OF FLOOR AREA OVER A MAXIMUM AREA OF
1585.90 SQFT (m2) WHEN SUPPLIED WATER AT THE RATE OF
354.74 GPM (L/min) AT 47.363 PSI (bars) AT THE BASE OF THE RISER
HOSE STREAM ALLOWANCE OF 250 GPM (L/min)
IS INCLUDED IN THE ABOVE
OCCUPANCY CLASSIFICATION S1 / B - SPRINKLERED
COMMODITY CLASSIFICATION CLASS I - IV
MAXIMUM STORAGE HEIGHT 12'-0 FT.
MAX. COVERAGE PER HEAD 121.88 SQ. FT.
INSTALLED BY SAN JOAQUIN FIRE PROTECTION, INC.

REMOTE AREA #3 BUILDING "C"

COMPANY PRINT NO. FP - 3 DATED 11/13/2021
FOR MADERA INDUSTRIAL WAREHOUSE BLDG. A, B, C, & D
AT 335 S. SCHNOOR AVE. CONTRACT NO. 21016
IS DESIGNED TO DISCHARGE AT A RATE OF 20 GPM
(L/min) PER SQFT (m2) OF FLOOR AREA OVER A MAXIMUM AREA OF
1585.90 SQFT (m2) WHEN SUPPLIED WATER AT THE RATE OF
251.77 GPM (L/min) AT 47.391 PSI (bars) AT THE BASE OF THE RISER
HOSE STREAM ALLOWANCE OF 250 GPM (L/min)
IS INCLUDED IN THE ABOVE
OCCUPANCY CLASSIFICATION S1 / B - SPRINKLERED
COMMODITY CLASSIFICATION CLASS I - IV
MAXIMUM STORAGE HEIGHT 12'-0 FT.
MAX. COVERAGE PER HEAD 121.88 SQ. FT.
INSTALLED BY SAN JOAQUIN FIRE PROTECTION, INC.

REMOTE AREA #2 BUILDING "B"

COMPANY PRINT NO. FP - 3 DATED 11/13/2021
FOR MADERA INDUSTRIAL WAREHOUSE BLDG. A, B, C, & D
AT 345 S. SCHNOOR AVE. CONTRACT NO. 21016
IS DESIGNED TO DISCHARGE AT A RATE OF 20 GPM
(L/min) PER SQFT (m2) OF FLOOR AREA OVER A MAXIMUM AREA OF
1585.90
343.93 GPM (L/min) AT 47.733 PSI (bars) AT THE BASE OF THE RISER
HOSE STREAM ALLOWANCE OF 250 GPM (L/min)
IS INCLUDED IN THE ABOVE
OCCUPANCY CLASSIFICATION S1 / B - SPRINKLERED
COMMODITY CLASSIFICATION CLASS I - IV
MAXIMUM STORAGE HEIGHT 12'-0 FT.
MAX. COVERAGE PER HEAD 121.88 SQ. FT.
INSTALLED BY SAN JOAQUIN FIRE PROTECTION, INC.

REMOTE AREA #4 BUILDING "D"

COMPANY PRINT NO. FP - 3 DATED 11/13/2021
FOR MADERA INDUSTRIAL WAREHOUSE BLDG. A, B, C, & D
AT 355 S. SCHNOOR AVE. CONTRACT NO. 21016
IS DESIGNED TO DISCHARGE AT A RATE OF 20 GPM
(L/min) PER SQFT (m2) OF FLOOR AREA OVER A MAXIMUM AREA OF
1585.90
250.27 GPM (L/min) AT 47.761 PSI (bars) AT THE BASE OF THE RISER
HOSE STREAM ALLOWANCE OF 250 GPM (L/min)
IS INCLUDED IN THE ABOVE
OCCUPANCY CLASSIFICATION S1 / B - SPRINKLERED
COMMODITY CLASSIFICATION CLASS I - IV
MAXIMUM STORAGE HEIGHT 12'-0 FT.
MAX. COVERAGE PER HEAD 121.88 SQ. FT.
INSTALLED BY SAN JOAQUIN FIRE PROTECTION, INC.

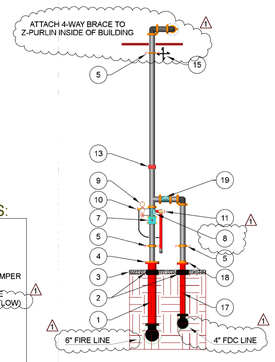

RISER DETAIL

SCALE 1/4" = 1'-0

RISER KEY NOTES:

1. 6" FIRE LINE STUB-UP
2. 2" ANNULAR CLEARANCE
3. ASPHALT
4. 6 X 4 RED. WELD FLANGE FLG.
5. 4" FLEX COUPLING
6. MAIN DRAIN BRACE
7. 4" GRV. BUTTERFLY VALVE W/TAMPER SWITCH
8. 4" GRV. SHOT GUN CHECK VALVE ASSY. (TO PREVENT FDC BACK FLOW)
9. PSI GAUGE ASSY.
10. ½" RELIEF VALVE
11. 2" MAIN DRAIN VALVE
12. 4" FDC LINE
13. 4" FLOW SWITCH
14. ELECT. BELL
15. 4-WAY BRACE. (ATTACHED TO Z-PURLIN INSIDE OF BUILDING)
16. SPARE HEAD BOX (IN RISER ROOM)
17. 4" FDC LINE (UNDERGROUND PLAN)
18. 4" WELD FLANGE
19. 4" GRV. CHECK VALVE (FDC LINE)

SHEET INDEX

SHEET	DISCRIPTION
FP-1	GENERAL NOTES, RISER, HANGER AND BRACING DETAILS
FP-2	SITE, UNDERGROUND PIPING & CROOS SECTION PLAN
FP-3	BLDG. A PIPING PLAN
FP-4	BLDG. B PIPING PLAN
FP-5	BLDG. C PIPING PLAN
FP-6	BLDG. D PIPING PLAN

PROPOSED PROJECT

KEY PLAN

N.T.S.

LICENSED FIRE PROTECTION CONTRACTOR SAN JOAQUIN FIRE PROTECTION, INC. C-16 LICENSE No. 775461 FRESNO, CA. STATE OF CALIFORNIA

FOR FIRE DEPT USE ONLY:

AS-BUILT

THESE DRAWINGS, SPECIFICATIONS, THE IDEAS, DESIGNS, AND ARRANGEMENTS REPRESENTED THEREBY ARE AND SHALL REMAIN THE PROPERTY OF SAN JOAQUIN FIRE PROTECTION, INC. AND NO PART THEREOF SHALL BE COPIED, DISCLOSED TO OTHERS, OR USED IN CONNECTION WITH ANY OTHER WORK OR PROJECT OTHER THAN THE SPECIFIC PROJECT FOR WHICH THEY HAVE BEEN PREPARED AND DEVELOPED WITHOUT THE WRITTEN CONSENT OF SAN JOAQUIN FIRE PROTECTION, INC. VISUAL CONTACT WITH THESE DRAWINGS OR SPECIFICATIONS SHALL CONSTITUE CONCLUSIVE EVIDENCE OF THESE RESTRICTIONS.

Revisions

1	12/03/21 FIRE DEPT. COMMENTS

Symbols

- Hanger Location
- Lateral Brace
- Longitudinal Brace
- Four Way Brace
- Hydraulic Refs. Points
- Thrust Block
- Backflow Preventer
- Key Operated Valve
- Post Indicator Valve
- Check Valve
- Fire Dept. Connection
- Hose Valve
- Hose Station

Sprinkler Head Symbols

- Pendent on Drop
- Pendent on Drop w/401 Escutcheon
- Upright & Pendent on 1" Tee
- Upright on Outlet
- Upright on Tee or Cross With 1" Plug
- Upright on Sprig Up With Tee & 1" Plug
- Upright on Sprig Up
- Sidewall on Outlet

Sprinkler Head Type & Count

Sym.	Quantity	Manufacturer	Model	Response	K-Factor	Orifice Size	Type	Temp.	Finish	Escutcheon / Finish
	.									
	.									
	.									
	.			NO SPRINKLERS THIS SHEET						
	.									
	.									
Total:	.									

SAN JOAQUIN FIRE PROTECTION, INC.
5957 E. HARVARD AVE. FRESNO, CA. 93727
PH. (559) 292-7111 FAX (559) 292-7211 CA. LIC. 775461

DESCRIPTION: GENERAL NOTES, RISER, HANGER AND BRACING DETAILS

Job No.	21016
Date	11/13/2021
Engr.	GREG S.
Scale	1/8" = 1'-0"

MADERA INDUSTRIAL
325, 335, 345, & 355 S, SCHNOOR AVE.
MADERA, CA. 93637

FP-1
OF 6 SHEET

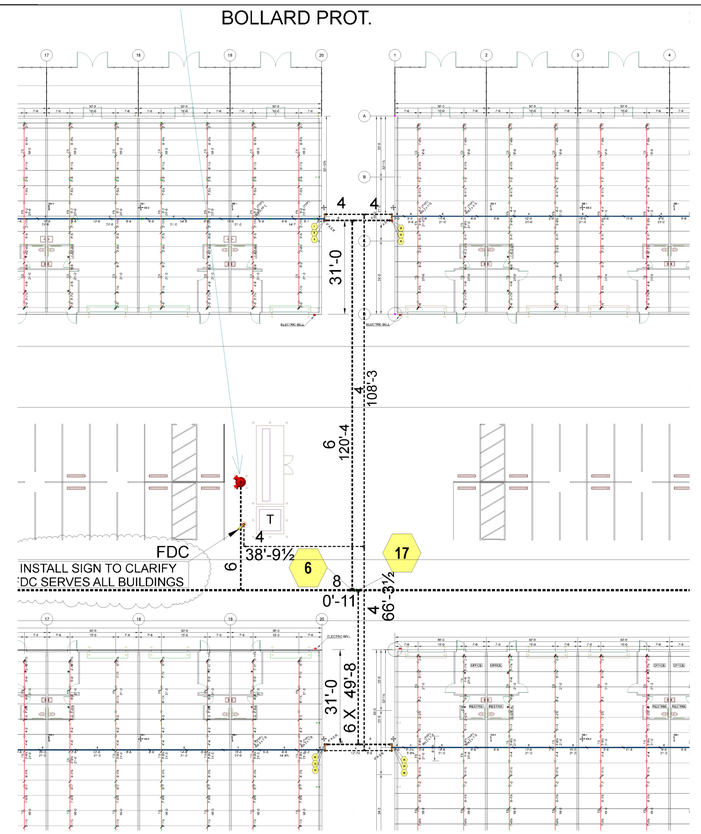

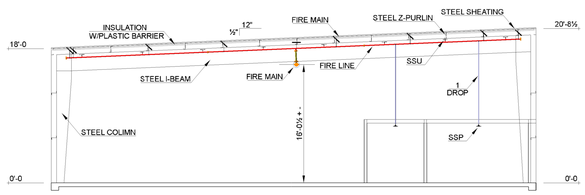

A CROSS SECTION

SCALE 1/8" = 1'-0

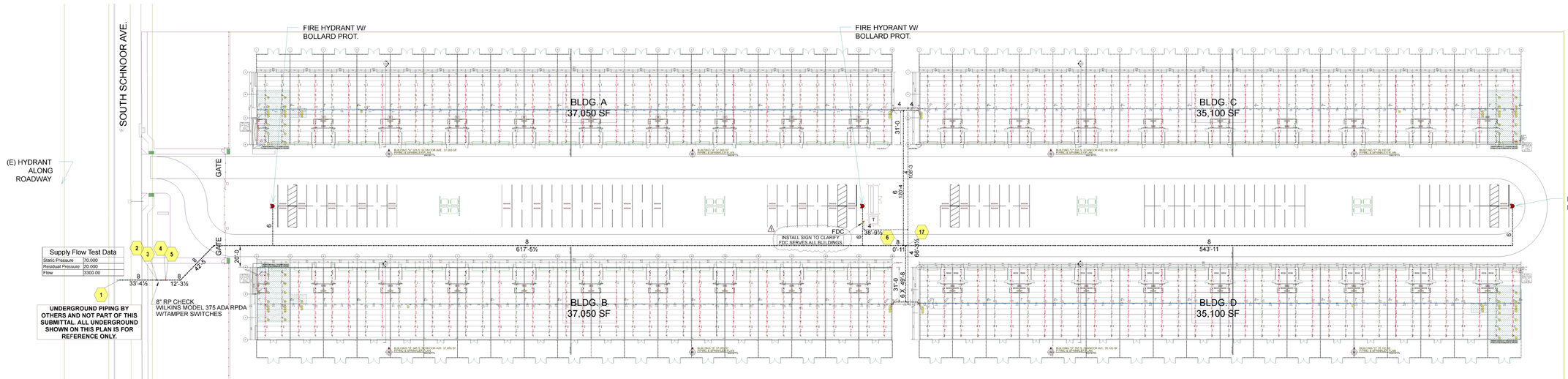

Supply Flow Test Data	
Static Pressure	70.000
Residual Pressure	20.000
Flow	3300.00

SITE PLAN

SCALE 1" = 40'-0

FOR FIRE DEPT USE ONLY:

AS-BUILT

THESE DRAWINGS, SPECIFICATIONS, THE IDEAS, DESIGNS, AND ARRANGEMENTS REPRESENTED THEREBY ARE AND SHALL REMAIN THE PROPERTY OF SAN JOAQUIN FIRE PROTECTION, INC. AND NO PART THEREOF SHALL BE COPIED, DISCLOSED TO OTHERS, OR USED IN CONNECTION WITH ANY OTHER WORK OR PROJECT OTHER THAN THE SPECIFIC PROJECT FOR WHICH THEY HAVE BEEN PREPARED AND DEVELOPED WITHOUT THE WRITTEN CONSENT OF SAN JOAQUIN FIRE PROTECTION, INC. VISUAL CONTACT WITH THESE DRAWINGS OR SPECIFICATIONS SHALL CONSTITUTE CONCLUSIVE EVIDENCE OF THESE RESTRICTIONS.

Revisions

1	12/03/21 FIRE DEPT. COMMENTS

Symbols

- Hanger Location
- Lateral Brace
- Longitudinal Brace
- Four Way Brace
- Hydraulic Refs. Points
- Thrust Block

Symbols

- Backflow Preventer
- Key Operated Valve
- Post Indicator Valve
- Check Valve
- Fire Dept. Connection
- Hose Valve
- Hose Station

Sprinkler Head Symbols

- Pendent on Drop
- Pendent on Drop w/401 Escutcheon
- Upright & Pendent on 1" Tee
- Upright on Outlet
- Upright on Tee or Cross With 1" Plug
- Upright on Sprig Up With Tee & 1" Plug
- Upright on Sprig Up
- Sidewall on Outlet

Sprinkler Head Type & Count

Sym.	Quantity	Manufacturer	Model	Response	K-Factor	Orifice Size	Type	Temp.	Finish	Escutcheon / Finish
	.									
	.									
	.									
	.			NO SPRINKLERS THIS SHEET						
	.									
	.									
Total:	.									

SAN JOAQUIN FIRE PROTECTION, INC.
5957 E. HARVARD AVE. FRESNO, CA. 93727
PH. (559) 292-7111 FAX (559) 292-7211 CA. LIC. 775461

DESCRIPTION: SITE, UNDERGROUND PIPING & CROSS SECTION PLAN

Job No.	21016
Date	11/13/2021
Engr.	GREG S.
Scale	SEE PLAN

MADERA INDUSTRIAL
325, 335, 345, & 355 S, SCHNOOR AVE.
MADERA, CA. 93637

FP-2
OF 6 SHEET

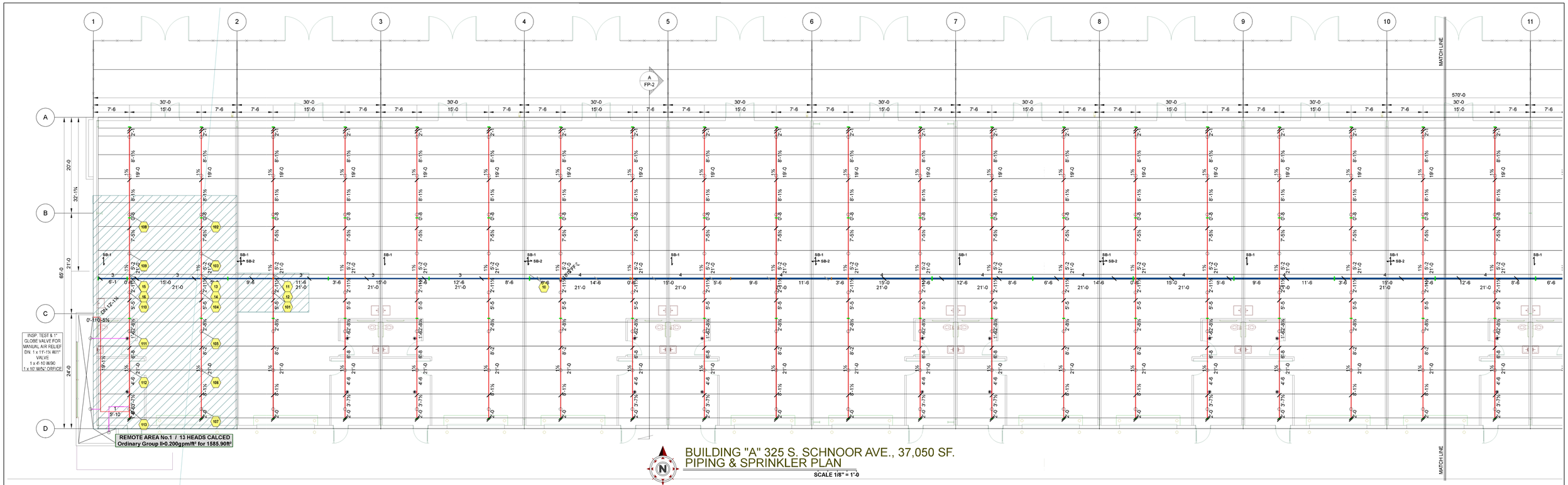

BUILDING "A" 325 S. SCHNOOR AVE., 37,050 SF.
PIPING & SPRINKLER PLAN

SCALE 1/8" = 1'-0

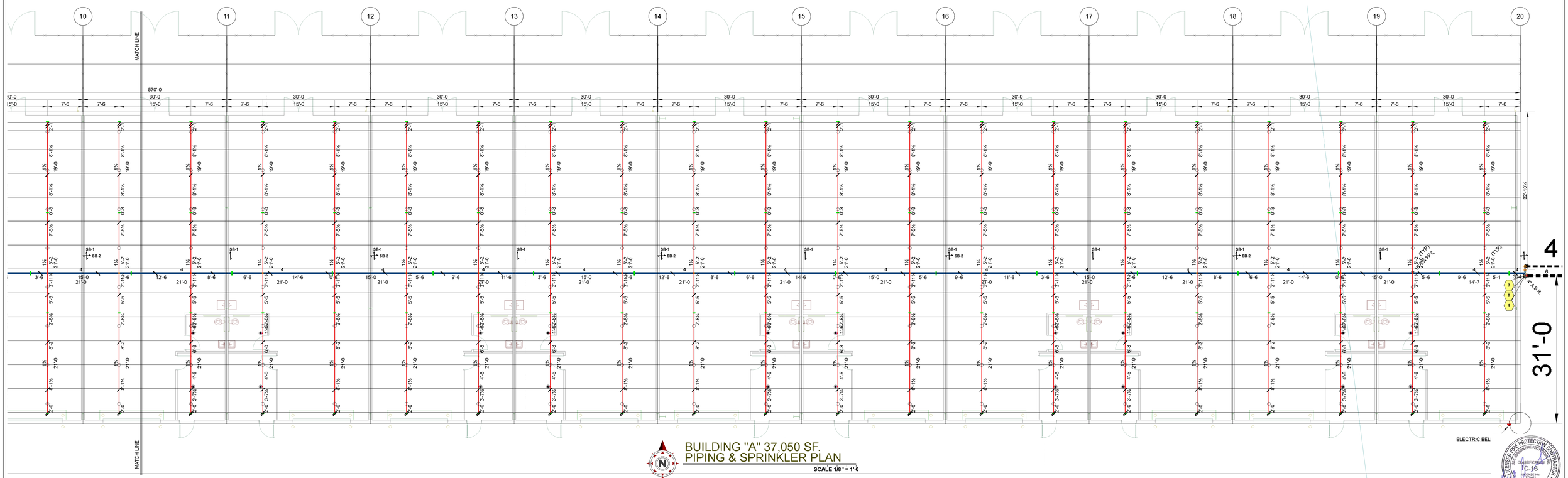

BUILDING "A" 37,050 SF.
PIPING & SPRINKLER PLAN

SCALE 1/8" = 1'-0

AS-BUILT

THESE DRAWINGS, SPECIFICATIONS, THE IDEAS, DESIGNS, AND ARRANGEMENTS REPRESENTED THEREBY ARE AND SHALL REMAIN THE PROPERTY OF SAN JOAQUIN FIRE PROTECTION, INC. AND NO PART THEREOF SHALL BE COPIED, DISCLOSED TO OTHERS, OR USED IN CONNECTION WITH ANY OTHER WORK OR PROJECT OTHER THAN THE SPECIFIC PROJECT FOR WHICH THEY HAVE BEEN PREPARED AND DEVELOPED WITHOUT THE WRITTEN CONSENT OF SAN JOAQUIN FIRE PROTECTION, INC. VISUAL CONTACT WITH THESE DRAWINGS OR SPECIFICATIONS SHALL CONSTITUE CONCLUSIVE EVIDENCE OF THESE RESTRICTIONS.

Revisions

1	12/03/21 FIRE DEPT. COMMENTS

Symbols

- Hanger Location
- Lateral Brace
- Longitudinal Brace
- Four Way Brace
- Hydraulic Refs. Points
- Thrust Block

Symbols

- Backflow Preventer
- Key Operated Valve
- Post Indicator Valve
- Check Valve
- Fire Dept. Connection
- Hose Valve
- Hose Station

Sprinkler Head Symbols

- Pendent on Drop
- Pendent on Drop w/401 Escutcheon
- Upright & Pendent on 1" Tee
- Upright on Outlet
- Upright on Tee or Cross With 1" Plug
- Upright on Sprig Up With Tee & 1" Plug
- Upright on Sprig Up
- Sidewall on Outlet

Sprinkler Head Type & Count

Sym.	Quantity	Manufacturer	Model	Response	K-Factor	Orifice Size	Type	Temp.	Finish	Escutcheon / Finish
	304	VICTAULIC	V3401	Standard	8.0	3/4"	Upright	200°F	Brass	None
	38	VICTAULIC	V3405	Standard	8.0	3/4"	Pendent	155°F	Chrome	401 Adjustable / Chrome
	.									
	.									
	.									
	.									
Total:	342									

SAN JOAQUIN FIRE PROTECTION, INC.
5957 E. HARVARD AVE. FRESNO, CA. 93727
PH. (559) 292-7111 FAX (559) 292-7211 CA. LIC. 775461

DESCRIPTION: BUILDING "A" SPRINKLER PIPING, & CALCULATION PLAN

Job No.	21016
Date	11/13/2021
Engr.	GREG S.
Scale	1/8" = 1'-0"

MADERA INDUSTRIAL
325, 335, 345, & 355 S, SCHNOOR AVE.
MADERA, CA. 93637

FP-3
OF 6 SHEET

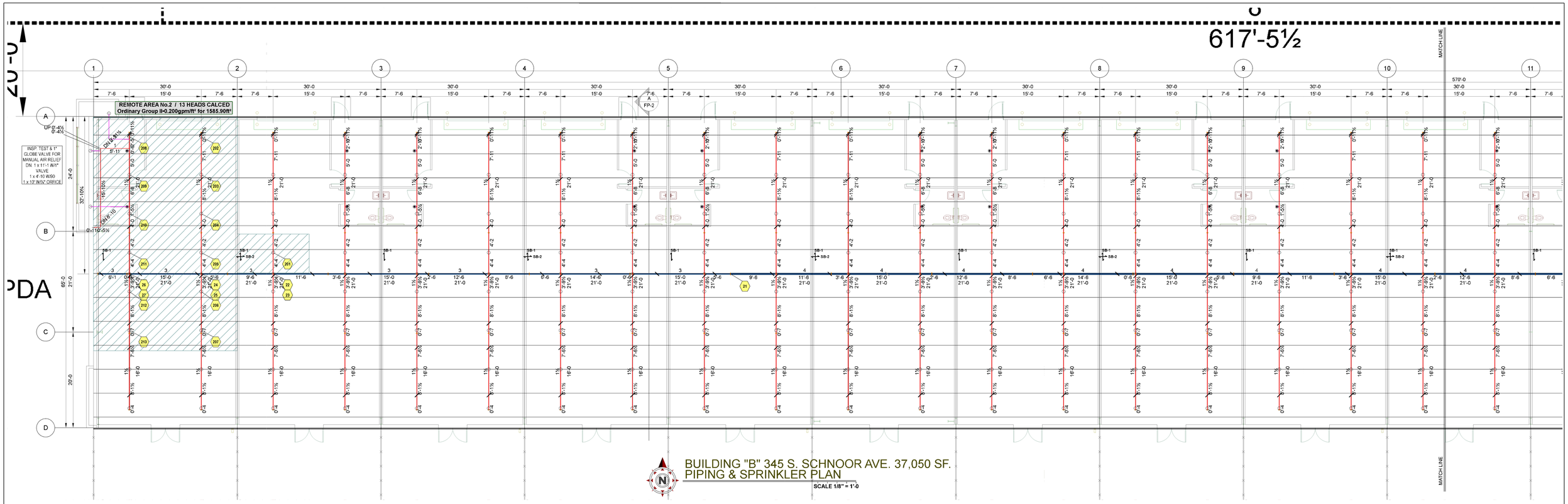

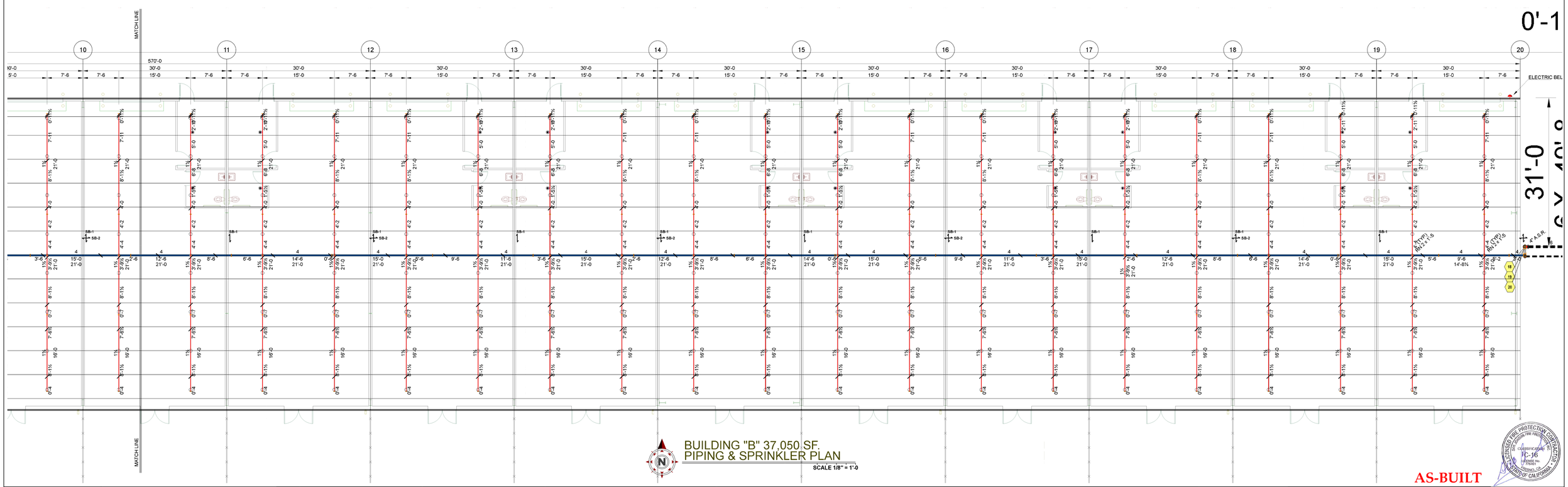

AS-BUILT

THESE DRAWINGS, SPECIFICATIONS, THE IDEAS, DESIGNS, AND ARRANGEMENTS REPRESENTED THEREBY ARE AND SHALL REMAIN THE PROPERTY OF SAN JOAQUIN FIRE PROTECTION, INC. AND NO PART THEREOF SHALL BE COPIED, DISCLOSED TO OTHERS, OR USED IN CONNECTION WITH ANY OTHER WORK OR PROJECT OTHER THAN THE SPECIFIC PROJECT FOR WHICH THEY HAVE BEEN PREPARED AND DEVELOPED WITHOUT THE WRITTEN CONSENT OF SAN JOAQUIN FIRE PROTECTION, INC. VISUAL CONTACT WITH THESE DRAWINGS OR SPECIFICATIONS SHALL CONSTITUE CONCLUSIVE EVIDENCE OF THESE RESTRICTIONS.

Revisions

1	12/03/21 FIRE DEPT. COMMENTS

Symbols

- Hanger Location
- Lateral Brace
- Longitudinal Brace
- Four Way Brace
- Hydraulic Refs. Points
- Thrust Block

Symbols

- Backflow Preventer
- Key Operated Valve
- Post Indicator Valve
- Check Valve
- Fire Dept. Connection
- Hose Valve
- Hose Station

Sprinkler Head Symbols

- Pendent on Drop
- Pendent on Drop w/401 Escutcheon
- Upright & Pendent on 1" Tee
- Upright on Outlet
- Upright on Tee or Cross With 1" Plug
- Upright on Sprig Up With Tee & 1" Plug
- Upright on Sprig Up
- Sidewall on Outlet

Sprinkler Head Type & Count

Sym.	Quantity	Manufacturer	Model	Response	K-Factor	Orifice Size	Type	Temp.	Finish	Escutcheon / Finish
	304	VICTAULIC	V3401	Standard	8.0	3/4"	Upright	200°F	Brass	None
	38	VICTAULIC	V3405	Standard	8.0	3/4"	Pendent	155°F	Chrome	401 Adjustable / Chrome
	.									
	.									
	.									
	.									
Total:	342									

SAN JOAQUIN FIRE PROTECTION, INC.
5957 E. HARVARD AVE. FRESNO, CA. 93727
PH. (559) 292-7111 FAX (559) 292-7211 CA. LIC. 775461

DISCRIPTION: BUILDING "B" SPRINKLER PIPING, & CALCULATION PLAN

Job No.	21016
Date	11/13/2021
Engr.	GREG S.
Scale	1/8" = 1'-0"

MADERA INDUSTRIAL
325, 335, 345, & 355 S, SCHNOOR AVE.
MADERA, CA. 93637

FP-4
OF 6 SHEET

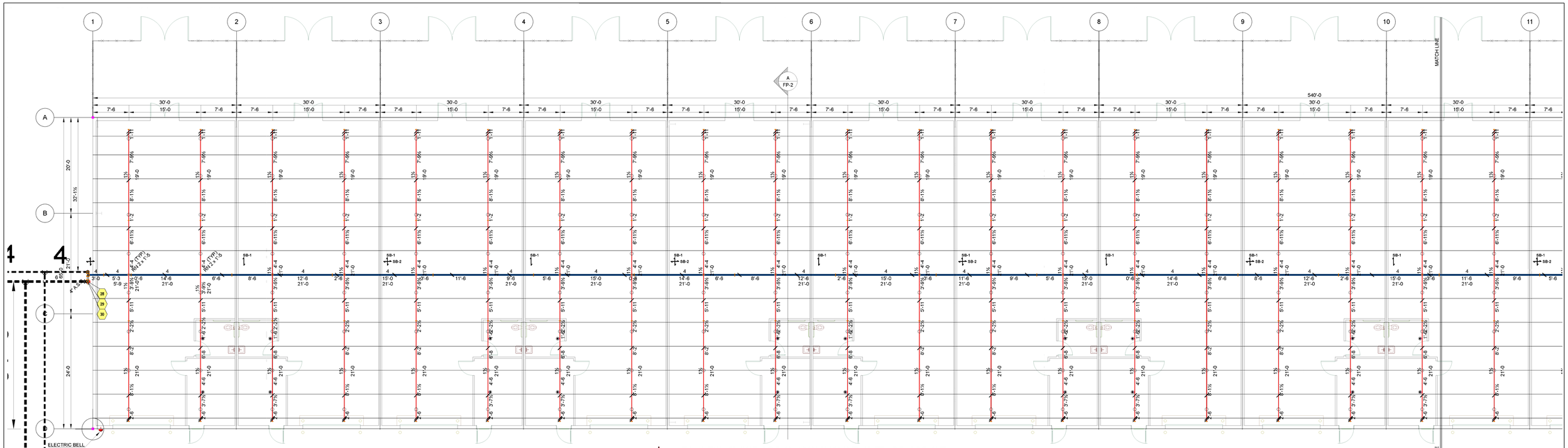

BUILDING "C" 335 S. SCHNOOR AVE. 35,100 SF.
PIPING & SPRINKLER PLAN
SCALE 1/8" = 1'-0

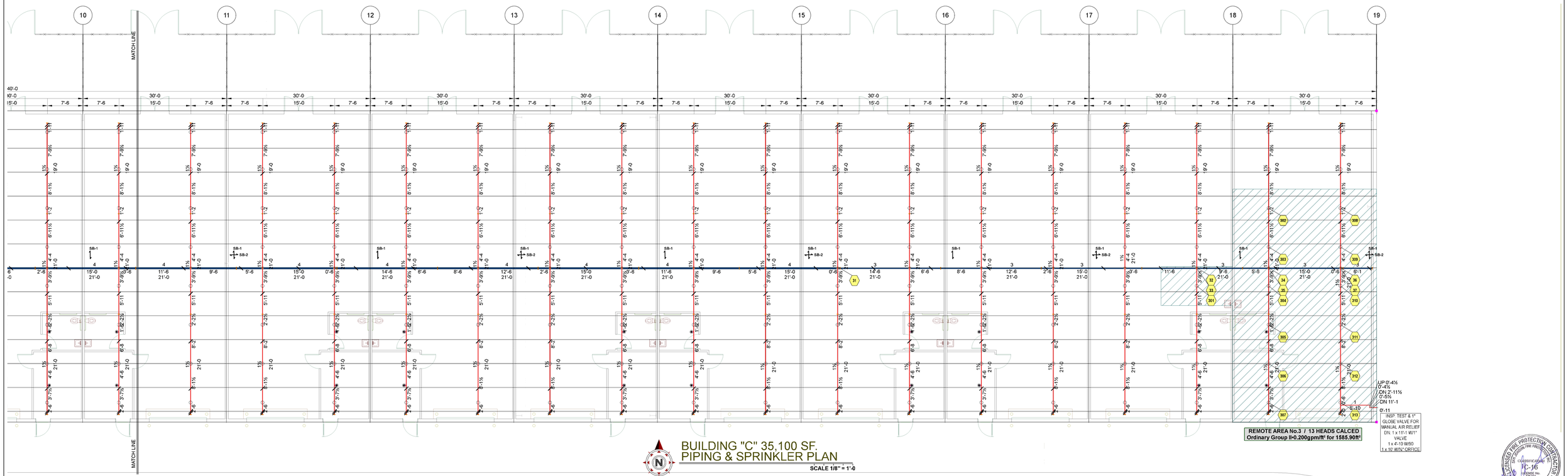

BUILDING "C" 35,100 SF.
PIPING & SPRINKLER PLAN
SCALE 1/8" = 1'-0

AS-BUILT

THESE DRAWINGS, SPECIFICATIONS, THE IDEAS, DESIGNS, AND ARRANGEMENTS REPRESENTED THEREBY ARE AND SHALL REMAIN THE PROPERTY OF SAN JOAQUIN FIRE PROTECTION, INC. AND NO PART THEREOF SHALL BE COPIED, DISCLOSED TO OTHERS, OR USED IN CONNECTION WITH ANY OTHER WORK OR PROJECT OTHER THAN THE SPECIFIC PROJECT FOR WHICH THEY HAVE BEEN PREPARED AND DEVELOPED WITHOUT THE WRITTEN CONSENT OF SAN JOAQUIN FIRE PROTECTION, INC. VISUAL CONTACT WITH THESE DRAWINGS OR SPECIFICATIONS SHALL CONSTITUE CONCLUSIVE EVIDENCE OF THESE RESTRICTIONS.

Revisions

1	12/03/21 FIRE DEPT. COMMENTS

Symbols

- Hanger Location
- Lateral Brace
- Longitudinal Brace
- Four Way Brace
- Hydraulic Refs. Points
- Thrust Block

Symbols

- Backflow Preventer
- Key Operated Valve
- Post Indicator Valve
- Check Valve
- Fire Dept. Connection
- Hose Valve
- Hose Station

Sprinkler Head Symbols

- Pendent on Drop
- Pendent on Drop w/401 Escutcheon
- Upright & Pendent on 1" Tee
- Upright on Outlet
- Upright on Tee or Cross With 1" Plug
- Upright on Sprig Up With Tee & 1" Plug
- Upright on Sprig Up
- Sidewall on Outlet

Sprinkler Head Type & Count

Sym.	Quantity	Manufacturer	Model	Response	K-Factor	Orifice Size	Type	Temp.	Finish	Escutcheon / Finish
	288	VICTAULIC	V3401	Standard	8.0	3/4"	Upright	200°F	Brass	None
	36	VICTAULIC	V3405	Standard	8.0	3/4"	Pendent	155°F	Chrome	401 Adjustable / Chrome
	.									
	.									
	.									
	.									
Total:	324									

SAN JOAQUIN FIRE PROTECTION, INC.
5957 E. HARVARD AVE. FRESNO, CA. 93727
PH. (559) 292-7111 FAX (559) 292-7211 CA. LIC. 775461

DISCRIPTION: BUILDING "C" SPRINKLER PIPING, & CALCULATION PLAN

Job No.	21016
Date	11/13/2021
Engr.	GREG S.
Scale	1/8" = 1'-0"

MADERA INDUSTRIAL
325, 335, 345, & 355 S, SCHNOOR AVE.
MADERA, CA. 93637

FP-5
OF 6 SHEET

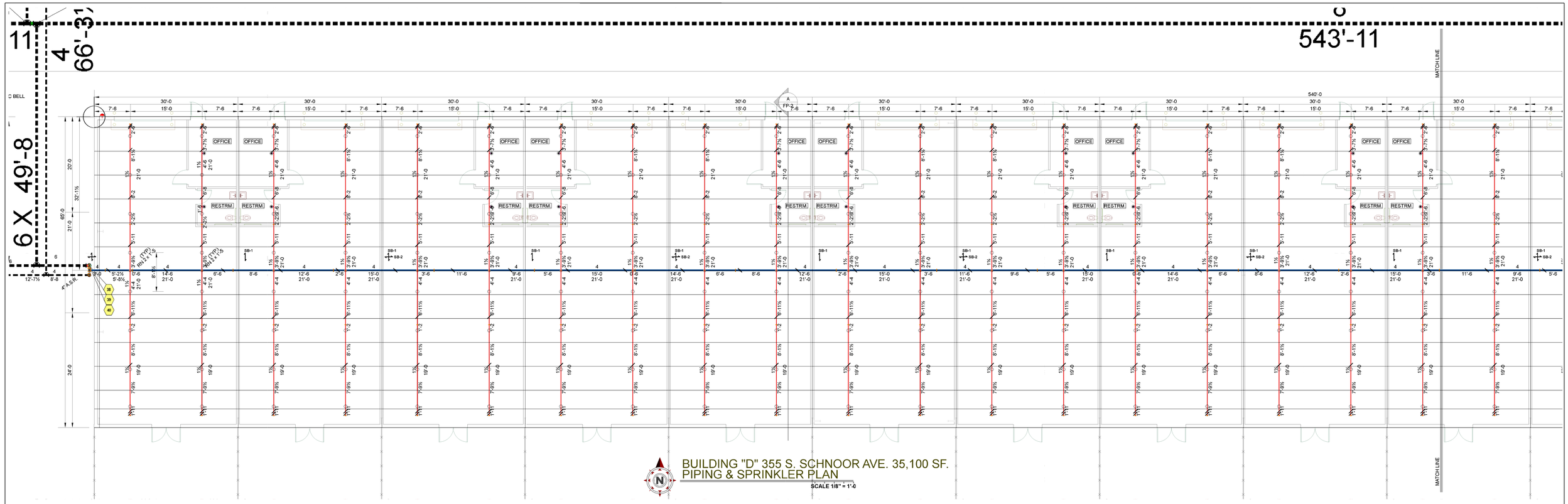

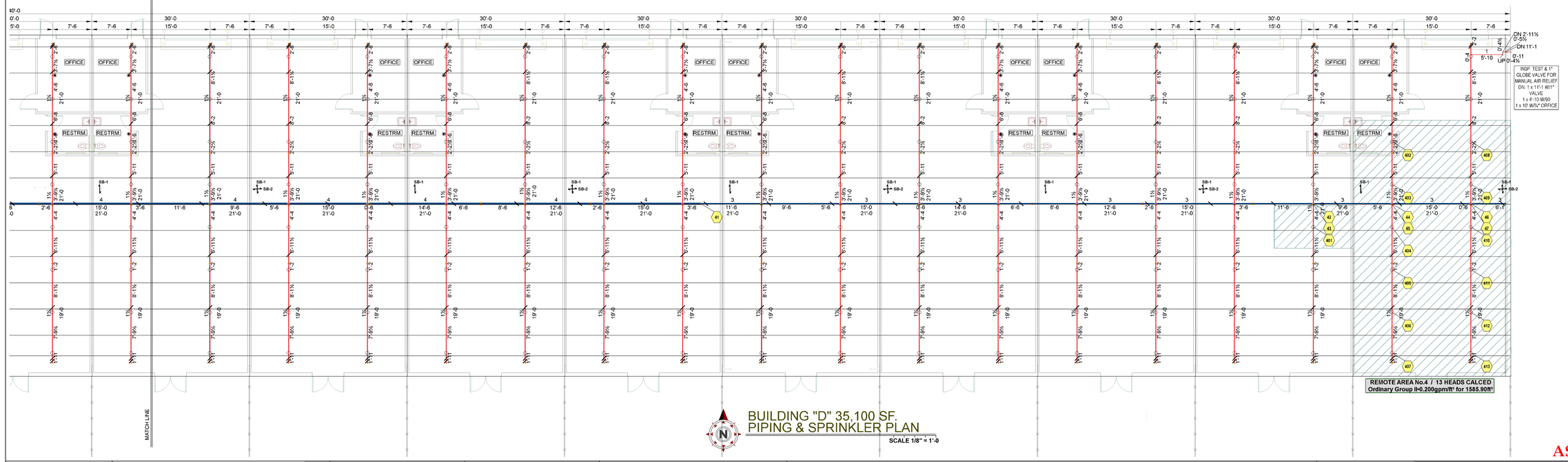

AS-BUILT

THESE DRAWINGS, SPECIFICATIONS, THE IDEAS, DESIGNS, AND ARRANGEMENTS REPRESENTED THEREBY ARE AND SHALL REMAIN THE PROPERTY OF SAN JOAQUIN FIRE PROTECTION, INC. AND NO PART THEREOF SHALL BE COPIED, DISCLOSED TO OTHERS, OR USED IN CONNECTION WITH ANY OTHER WORK OR PROJECT OTHER THAN THE SPECIFIC PROJECT FOR WHICH THEY HAVE BEEN PREPARED AND DEVELOPED WITHOUT THE WRITTEN CONSENT OF SAN JOAQUIN FIRE PROTECTION, INC. VISUAL CONTACT WITH THESE DRAWINGS OR SPECIFICATIONS SHALL CONSTITUTE CONCLUSIVE EVIDENCE OF THESE RESTRICTIONS.

Revisions

1	12/03/21 FIRE DEPT. COMMENTS

Symbols

- Hanger Location
- Lateral Brace
- Longitudinal Brace
- Four Way Brace
- Hydraulic Refs. Points
- Thrust Block

Symbols

- Backflow Preventer
- Key Operated Valve
- Post Indicator Valve
- Check Valve
- Fire Dept. Connection
- Hose Valve
- Hose Station

Sprinkler Head Symbols

- Pendent on Drop
- Pendent on Drop w/401 Escutcheon
- Upright & Pendent on 1" Tee
- Upright on Outlet
- Upright on Tee or Cross With 1" Plug
- Upright on Sprig Up With Tee & 1" Plug
- Upright on Sprig Up
- Sidewall on Outlet

Sprinkler Head Type & Count

Sym.	Quantity	Manufacturer	Model	Response	K-Factor	Orifice Size	Type	Temp.	Finish	Escutcheon / Finish
○	288	VICTAULIC	V3401	Standard	8.0	3/4"	Upright	200°F	Brass	None
◉	36	VICTAULIC	V3405	Standard	8.0	3/4"	Pendent	155°F	Chrome	401 Adjustable / Chrome
	.									
	.									
	.									
	.									
Total:	324									

SAN JOAQUIN FIRE PROTECTION, INC.
5957 E. HARVARD AVE. FRESNO, CA. 93727
PH. (559) 292-7111 FAX (559) 292-7211 CA. LIC. 775461

DISCRIPTION: BUILDING "D" SPRINKLER PIPING, & CALCULATION PLAN

Job No.	21016
Date	11/13/2021
Engr.	GREG S.
Scale	1/8" = 1'-0"

MADERA INDUSTRIAL
325, 335, 345, & 355 S, SCHNOOR AVE.
MADERA, CA. 93637

FP-6
OF 6 SHEET

SAN JOAQUIN
FIRE PROTECTION INC
5957 E. Harvard • Fresno, CA 93727 • (559) 292-7111 • Fax (559) 292-7211
CA Lic. #775461

RECEIVED
NOV 17 2021
BUILDING DEPARTMENT

RECEIVED
DEC 08 2021
BUILDING DEPARTMENT

TABLE OF CONTENT

MADERA INDUSTRIAL

325, 335, 345, & 355 S. SCHNOOR AVE.

MADERA, CA. 93637

Contracted With: DBKO DESIGN

2019CBC
City of Madera
Building Department
The approval of these plans does not prevent the City of Madera from requiring correction of errors or omissions in the plans, specifications or construction. Subject to field inspections and approvals. Laws, Codes and Ordinances
APPROVED
By:
Date: JAN 05 2022
2019CBC
2019CBC

Sprinkler Heads ..... Page 2
Piping ..... Page 8
Electric Bell ..... Page 10
Flow Switch ..... Page 12
Tamper Switch ..... Page 16
Test Drain Valve ..... Page 22
Welded Material ..... Page 24
Ductile Iron Threaded Fittings ..... Page 33
Pipe Hangers & Attachments ..... Page 43
Seismic Bracing & Attachments ..... Page 45
Drain Valve ..... Page 51
Head Guard ..... Page 52
Wall Plates ..... Page 55
Grooved Fittings ..... Page 56

JOB COPY

FireLock® V34, K8.0
Models V3401, V3402, V3405, V3406

Standard Spray
Upright, Pendent and Recessed Pendent
Standard and Quick Response

V3405/V3406
Recessed Pendent

V3405/V3406
Pendent

V3401/V3402
Upright

Approvals/Listings:

c UL us LISTED · FM · LPCB · VdS · CE 0786

See Victaulic Publication 10.01 for more details.

Product Description:

These Model V34 standard spray sprinklers are designed to provide a large discharge capacity in a hemispherical pattern for use in commercial applications. It is cast with a hex-shaped wrench boss to allow easy tightening from many angles, reducing assembly effort. This sprinkler is available in various temperature ratings (see chart on page 3) and finishes to meet many design requirements. The recessed pendent may be utilized with a Model V34 recessed escutcheon which provides up to ¾"/19 mm of adjustments.

Coverage

For coverage area and sprinkler placement, refer to NFPA 13 or applicable standard.

Note: Upright models V3401 and V3402 not VNIIPO approved

Technical Specifications:

Models: V3401, V3402, V3405, V3406

Style: Pendent, Upright or Recessed Pendent

Nominal Orifice Size: 17/32"/14 mm

K Factor: 8.0 Imp./11.5 S.I.[1]

Nominal Thread Size: ¾" NPT/20 mm

Max. Working Pressure:

- 175 psi/1200 kPa

Factory Hydrostatic Test: 100% @ 500 psi/3450 kPa

Min. Operating Pressure:

- 7 psi/48 kPa
- 0.35 bar/5 psi (VdS for upright only)

Temperature Rating: See chart

[1] For K-Factor when pressure is measured in Bar, multiply S.I. units by 10.0.

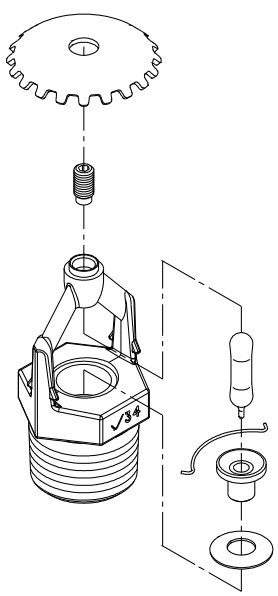

Exaggerated for clarity

Job/Owner

System No.	
Location	

Contractor

Submitted By	
Date	

Engineer

Spec Section	
Paragraph	
Approved	
Date	

 © 2014 Victaulic Company. All rights reserved.

Material Specifications:

Upright Deflector: Bronze per UNS C11000

Pendent Deflector: Bronze per UNS C51000

Bulb: Glass with glycerin solution

Bulb Nominal Diameter:

- ☐ Standard: 5.0 mm
- ☐ Quick Response: 3.0 mm

Load Screw: Bronze per UNS C65100

Pip Cap: Bronze per UNS C65100

Spring: Beryllium nickel

Seal: Teflon[2] tape

Frame: Die cast brass 65-30

Lodgement Spring: Stainless steel per UNS S30200

Accessories

Installation Wrench:

- ☐ Open End: V34
- ☐ Recessed: V34

Sprinkler Finishes:

- ☐ Plain Brass
- ☐ Chrome plated
- ☐ White painted[3]
- ☐ Flat black painted[3]
- ☐ Custom painted[3]
- ☐ Proprietary Nickel Teflon[2] coating[3]
- ☐ VC-250[4]

155, 200, 286SR Only:

- ☐ Wax[3]

For cabinets and other accessories refer to separate sheet.

NOTE: Weather resistant recessed escutcheons available upon request.

[2] Teflon is a registered trademark of Dupont Co.

[3] UL Listed for corrosion resistance.

[4] UL Listed and FM Approved for corrosion resistance

 © 2014 Victaulic Company. All rights reserved.

Approvals/Listings:

APPROVALS/LISTINGS	Model						
	V3401	V3405	V3405	V3402	V3406	V3406	V3406
Orifice Size (inches)	17/32″	17/32″	17/32″	17/32″	17/32″	17/32″	17/32″
Orifice Size (mm)	14	14	14	14	14	14	14
Nominal K Factor Imperial	8.0	8.0	8.0	8.0	8.0	8.0	8.0
Nominal K Factor S.I.[5]	11.5	11.5	11.5	11.5	11.5	11.5	11.5
Response	Standard	Standard	Standard	Quick	Quick	Quick	Quick
Deflector Type	Upright	Pendent	Recessed Pendent	Upright	Pendent	Recessed Pendent	Recessed Pendent
Adjustment			up to ¾″			up to ½″	up to ¾″
Approved Temperature Ratings	**F°/C°**						
cULus	135°F/57°C 155°F/68°C 175°F/79°C 200°F/93°C 286°F/141°C 360°F/182°C	35°F/57°C 155°F/68°C 175°F/79°C 200°F/93°C 286°F/141°C 360°F/182°C	135°F/57°C 155°F/68°C 175°F/79°C 200°F/93°C 286°F/141°C	135°F/57°C 155°F/68°C 175°F/79°C 200°F/93°C 286°F/141°C	135°F/57°C 155°F/68°C 175°F/79°C 200°F/93°C 286°F/141°C	135°F/57°C 175°F/79°C 200°F/93°C	135°F/57°C 175°F/79°C 200°F/93°C
FM	135°F/57°C 155°F/68°C 175°F/79°C 200°F/93°C 286°F/141°C 360°F/182°C	135°F/57°C 155°F/68°C 175°F/79°C 200°F/93°C 286°F/141°C 360°F/182°C	135°F/57°C 155°F/68°C 175°F/79°C 200°F/93°C	135°F/57°C 155°F/68°C 175°F/79°C 200°F/93°C 286°F/141°C	135°F/57°C 155°F/68°C 175°F/79°C 200°F/93°C 286°F/141°C	135°F/57°C 175°F/79°C 200°F/93°C	None
NYC/MEA # 62-99-E	135°F/57°C 155°F/68°C 175°F/79°C 200°F/93°C 286°F/141°C 360°F/182°C	135°F/57°C 155°F/68°C 175°F/79°C 200°F/93°C 286°F/141°C 360°F/182°C	135°F/57°C 155°F/68°C 175°F/79°C 200°F/93°C 286°F/141°C	135°F/57°C 155°F/68°C 175°F/79°C 200°F/93°C 286°F/141°C	135°F/57°C 155°F/68°C 175°F/79°C 200°F/93°C 286°F/141°C	135°F/57°C 175°F/79°C 200°F/93°C	135°F/57°C 175°F/79°C 200°F/93°C
CSFM # 7690-0531:112	135°F/57°C 155°F/68°C 175°F/79°C 200°F/93°C 286°F/141°C 360°F/182°C	135°F/57°C 155°F/68°C 175°F/79°C 200°F/93°C 286°F/141°C 360°F/182°C	135°F/57°C 155°F/68°C 175°F/79°C 200°F/93°C 286°F/141°C	135°F/57°C 155°F/68°C 175°F/79°C 200°F/93°C 286°F/141°C	135°F/57°C 155°F/68°C 175°F/79°C 200°F/93°C 286°F/141°C	135°F/57°C 175°F/79°C 200°F/93°C	135°F/57°C 175°F/79°C 200°F/93°C
VNIIPO[7]	None	135°F/57°C 155°F/68°C 175°F/79°C 200°F/93°C 286°F/141°C 360°F/182°C	135°F/57°C 155°F/68°C 175°F/79°C 200°F/93°C	None	135°F/57°C 155°F/68°C 175°F/79°C 200°F/93°C 286°F/141°C	135°F/57°C 175°F/79°C 200°F/93°C	None
VdS	135°F/57°C 155°F/68°C 175°F/79°C 200°F/93°C 286°F/141°C 360°F/182°C	None	None	135°F/57°C 155°F/68°C 175°F/79°C 200°F/93°C 286°F/141°C	None	None	None
CE	135°F/57°C 155°F/68°C 175°F/79°C 200°F/93°C 286°F/141°C 360°F/182°C	None	None	135°F/57°C 155°F/68°C 175°F/79°C 200°F/93°C 286°F/141°C	None	None	None
LPCB	135°F/57°C 155°F/68°C 175°F/79°C 200°F/93°C 286°F/141°C 360°F/182°C	None	None	135°F/57°C 155°F/68°C 175°F/79°C 200°F/93°C 286°F/141°C	None	None	None

[5] For K Factor when pressure is measured in Bar, multiply S.I. units by 10.0

[6] The density at S = 12m², H = 2.5 m, shall be a minimum of: 0, 014 dm³ / m.s at P = 0,1 MPa; 0.02 dm³ / m.s at P = 0,3 MPa

Note: Listings and Approvals as of printing. All are approved open.

 © 2014 Victaulic Company. All rights reserved.

Dimensions:

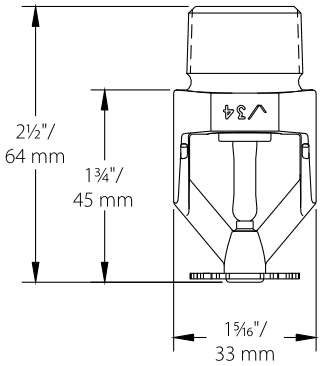

Standard Pendent –
V3405, V3406

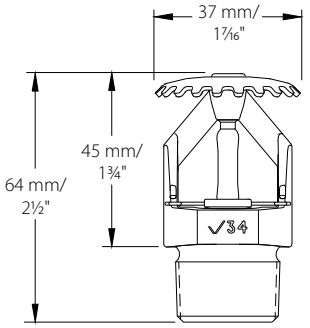

Standard Upright –
V3401, V3402

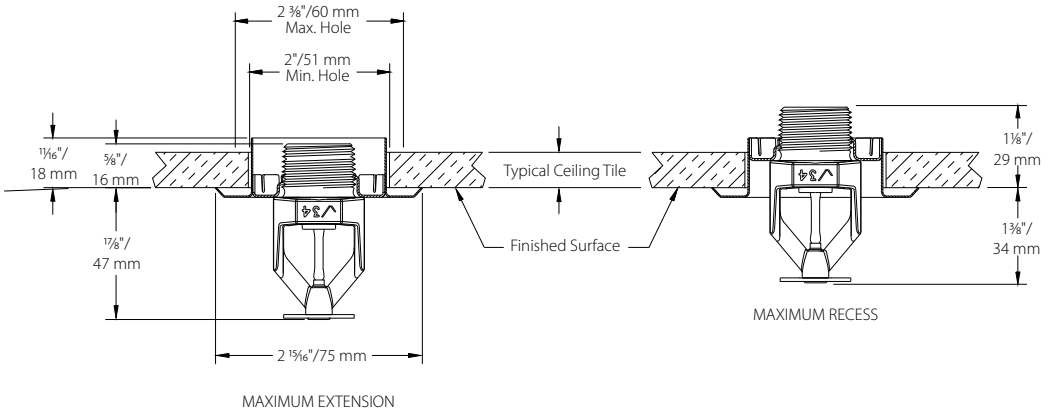

½" Adjustment Recessed – V3405, V3406 (drawing not to scale)

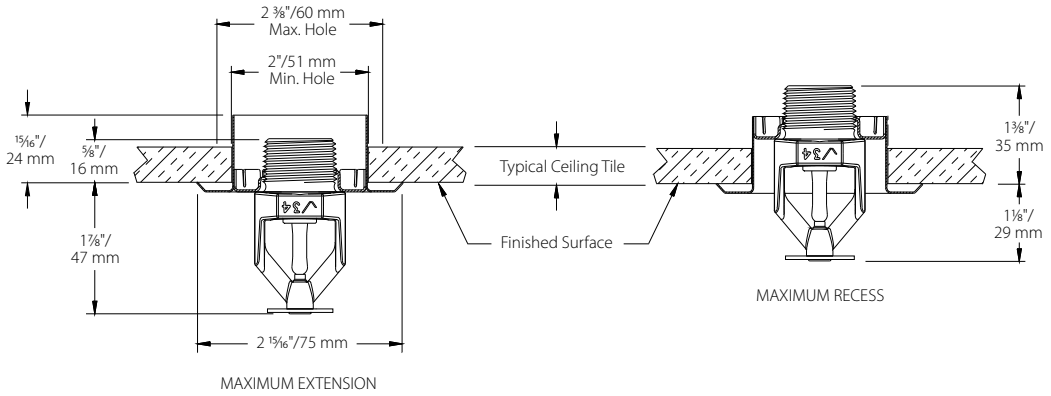

¾" Adjustment Recessed – V3405, V3406 (drawing not to scale)

 © 2014 Victaulic Company. All rights reserved.

Distribution Patterns:

Models V3405, V3406
K8.0 Standard Pendent and Recessed Pendent
Distribution Patterns – Trajectory

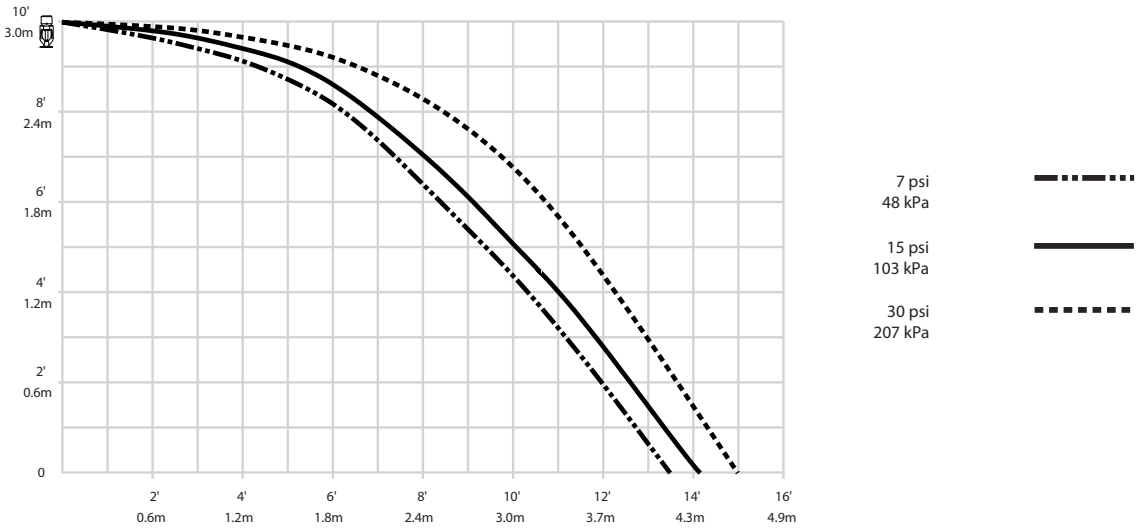

Models V3401, V3402
K8.0 Standard Upright
Distribution Patterns – Trajectory

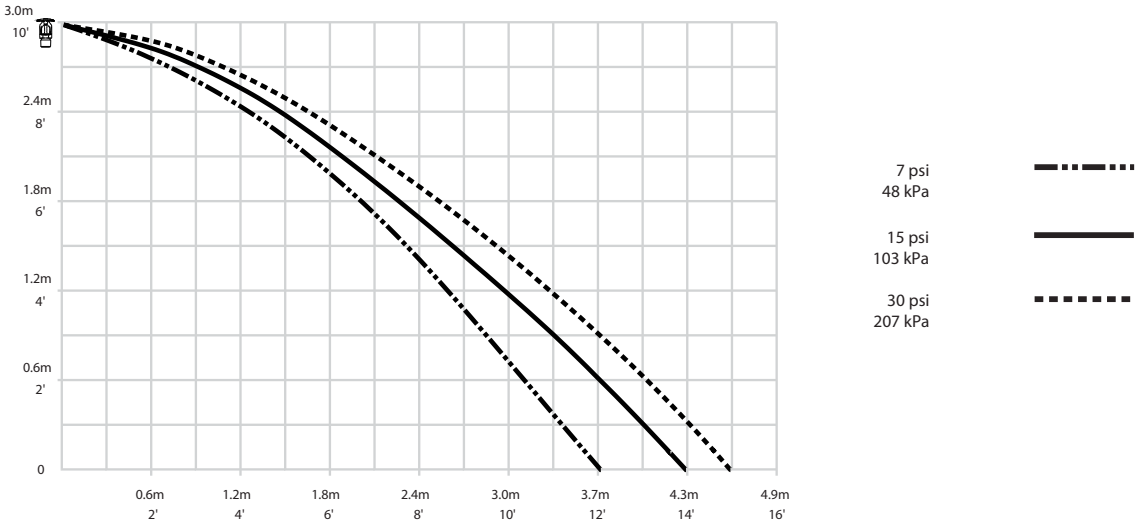

NOTES:

A. Data shown is approximate and can vary due to differences in installation.

B. These graphs illustrate approximate trajectories, floor-wetting, and wall-wetting patterns for these specific Victaulic FireLock Automatic Sprinklers. They are provided as information for guidance in avoiding obstructions to sprinklers and should not be used as minimum sprinkler spacing rules for installation. **Refer to the appropriate NFPA National Fire Code or the Authority Having Jurisdiction for specific information regarding obstructions, spacing limitations and area of coverage requirements.** Failure to follow these guidelines could adversely affect the performance of the sprinkler and will void all Listings, Approvals and Warranties.

C. All patterns are symmetrical to the centerline of the waterway.

 © 2014 Victaulic Company. All rights reserved.

Ratings:

All glass bulbs are rated for temperatures from -65°F (-54°C) to those shown in the table below.

Sprinkler Temperature Classification	Victaulic Part Identification	Temperature – °F/°C		Glass Bulb Color
		Nominal Temperature Rating	Maximum Ambient Temperature Allowed	
Ordinary	A	135°F/57°C	100°F/38°C	Orange
Ordinary	C	155°F/68°C	100°F/38°C	Red
Intermediate	E	175°F/79°C	150°F/65°C	Yellow
Intermediate	F	200°F/93°C	150°F/65°C	Green
High	J	286°F/141°C	225°F [8]/107°C	Blue
Extra High [7]	K	360°F/182°C	300°F/149°C	Mauve
–	M	Open	–	No Bulb

[7] Standard response only.
All are approved open, except for areas designated "No."

[8] 150°F/65°C if wax coated.

Available Wrenches:

	V34 Recessed	V34 Open End
V3401, V402 Upright	–	✓
V3405, V3406 Pendent	✓	✓
V3405, V3406 Recessed Pendent	✓	–

⚠ WARNING

- **Always read and understand installation, care, and maintenance instructions, supplied with each box of sprinklers, before proceeding with installation of any sprinklers.**
- **Always wear safety glasses and foot protection.**
- **Depressurize and drain the piping system before attempting to install, remove, or adjust any Victaulic piping products.**
- **Installation rules, especially those governing obstruction, must be strictly followed.**
- **Painting, plating, or any re-coating of sprinklers (other than that supplied by Victaulic) is not allowed.**

Failure to follow these instructions could result in serious personal injury and/or property damage.

The owner is responsible for maintaining the fire protection system and devices in proper operating condition. For minimum maintenance and inspection requirements, refer to the current National Fire Protection Association pamphlet that describes care and maintenance of sprinkler systems. In addition, the authority having jurisdiction may have additional maintenance, testing, and inspection requirements that must be followed.

If you need additional copies of this publication, or if you have any questions about the safe installation of this product, contact Victaulic World Headquarters: P.O. Box 31, Easton, Pennsylvania 18044-0031 USA, Telephone: 001-610-559-3300.

Installation
Reference should always be made to the I-40 Victaulic FireLock Automatic Sprinklers Installation and Maintenance Sheet for the product you are installing. This installation sheet is included with each shipment of Victaulic products for complete installation and assembly data, and is available in PDF format on our website at victaulic.com.

Warranty
Refer to the Warranty section of the current Price List or contact Victaulic for details.

Note
This product shall be manufactured by Victaulic or to Victaulic specifications. All products to be installed in accordance with current Victaulic installation/assembly instructions. Victaulic reserves the right to change product specifications, designs and standard equipment without notice and without incurring obligations.

Trademarks
Victaulic is a registered trademark of Victaulic Company.

 © 2014 Victaulic Company. All rights reserved.

EDDYTHREAD SPRINKLER PIPE SUBMITTAL DATA SHEET

APPROVALS AND SPECIFICATIONS

- ASTM A135, Grade A
- ASTM A795, Type E, Grade A
- Pressure rated to 300 psi
- Underwriters Laboratories—United States of America
- Underwriters Laboratories—Canada
- Factory Mutual
- NFPA-13
- NFPA-13R
- NFPA-14
- CIVIL DEFENSE APPROVAL—United Arab Emirates
- Made in the United States of America
- UL, ULC & FM listed for roll-groove, plain-end and welded joints for wet, dry, preaction and deluge sprinkler systems.
- LEED v4 Certified

FINISHES AND COATINGS

- Eddythread Sprinkler Pipe receives an OD mill coating of water-based paint which has corrosion protection expected with a painted carbon steel product, i.e. it would be expected to resist corrosion for an extended and indefinite period in a clean and dry environment and, as environmental conditions deteriorate, the corrosion protection would also diminish.
- Eddythread Sprinkler Pipe (black) receives an ID mill coating of Eddy Guard II MIC preventative coating. EG2 has been tested at independent laboratories to resist bacterial growth and maintain minimal bacterial count after multiple flushes (25) of the pipe.
- Eddythread Sprinkler Pipe when Hot Dip Galvanized by ASTM A123 and supplied by Bull Moose Tube is UL listed and FM approved.

PRODUCT IDENTIFICATION

- Every length of Bull Moose fire sprinkler pipe features large, easy-to-read, continuous stenciling, clearly identifying the manufacturer, type of pipe, size, and length.

Nominal Pipe Size (inches)	1	1-1/4"	1-1/2"	2"
O.D. (in)	1.295	1.650	1.900	2.375
I.D. (in)	1.083	1.418	1.654	2.123
Empty Weight (lb/ft)	1.461	2.070	2.547	3.308
Water Filled Weight (lb/ft)	1.860	2.754	3.468	4.842
C.R.R.*	1.00	1.00	1.00	1.00
Pieces per Lift	70	51	44	30

*Calculated using Standard UL CRR formula, UL Fire Protection Directory, Category VIZY

SUBMITTAL INFORMATION

Project

Contractor

Engineer

Specification Reference

Date

System Type

Locations

Comments

◯ Eddythread - Black ◯ Eddythread - Hot Dip Galvanized

EDDY FLOW SPRINKLER PIPE SUBMITTAL DATA SHEET

APPROVALS AND SPECIFICATIONS

- ASTM A135, Grade A
- ASTM A795, Type E, Grade A
- Pressure rated to 300 psi
- Underwriters Laboratories—United States of America
- Underwriters Laboratories—Canada
- Factory Mutual
- NFPA-13
- NFPA-13R
- NFPA-14
- CIVIL DEFENSE APPROVAL—United Arab Emirates
- Made in the United States of America
- UL, ULC & FM listed for roll-groove, plain-end and welded joints for wet, dry, preaction and deluge sprinkler systems.
- LEED v4 Certified

FINISHES AND COATINGS

- Eddy Flow Sprinkler Pipe receives an OD mill coating of water-based paint which has corrosion protection expected with a painted carbon steel product, i.e. it would be expected to resist corrosion for an extended and indefinite period in a clean and dry environment and, as environmental conditions deteriorate, the corrosion protection would also diminish.
- Eddy Flow Sprinkler Pipe (black) receives an ID mill coating of Eddy Guard II MIC preventative coating. EG2 has been tested at independent laboratories to resist bacterial growth and maintain minimal bacterial count after multiple flushes (25) of the pipe.
- Eddy Flow Sprinkler Pipe when Hot Dip Galvanized by ASTM A123 and supplied by Bull Moose Tube is UL listed and FM approved.

PRODUCT IDENTIFICATION

- Every length of Bull Moose fire sprinkler pipe features large, easy-to-read, continuous stenciling, clearly identifying the manufacturer, type of pipe, size, and length.

Nominal Pipe Size (inches)	1-1/4"	1-1/2"	2"	2-1/2"	3"	4"
O.D. (in)	1.660	1.900	2.375	2.875	3.500	4.500
I.D. (in)	1.530	1.728	2.203	2.705	3.334	4.310
Empty Weight (lb/ft)	1.222	1.844	2.330	2.809	3.361	4.968
Water Filled Weight (lb/ft)	2.019	2.860	3.982	5.299	7.144	11.290
C.R.R.*	1.98	3.44	2.78	1.66	1.00	1.00
Pieces per Lift	61	61	37	30	19	19

*Calculated using Standard UL CRR formula, UL Fire Protection Directory, Category VIZY

SUBMITTAL INFORMATION

Project

Contractor

Engineer

Specification Reference

Date

System Type

Locations

Comments

◯ Eddy Flow - Black ◯ Eddy Flow - Hot Dip Galvanized

POTTER
The Symbol of Protection

BELLS
PBA-AC & MBA-DC

UL, ULC, and FM Approved
Sizes Available: 6" (150mm), 8" (200mm) and 10" (250mm)
Voltages Available: 24VAC
120VAC
12VDC (10.2 to 15.6) Polarized
24VDC (20.4 to 31.2) Polarized
Service Use: Fire Alarm
General Signaling
Burglar Alarm
Environment: Indoor or outdoor use (See Note 1)
-40° to 150°F (-40° to 66°C)
(Outdoor use requires weatherproof backbox.)
Termination: AC Bells - 4 No. 18 AWG stranded wires
DC Bells - Terminal strip
Finish: Red powder coating
Optional: Model BBK-1 weatherproof backbox
Model BBX-1 deep weatherproof backbox

These vibrating type bells are designed for use as fire, burglar or general signaling devices. They have low power consumption and high decibel ratings. The unit mounts on a standard 4" (101mm) square electrical box for indoor use or on a model BBK-1 weatherproof backbox or BBX-1 deep weatherproof backbox for outdoor applications. Weatherproof backbox model BBK-1, Stock No. 1500001.

Notes:
1. Minimum dB ratings are calculated from integrated sound pressure measurements made at Underwriters Laboratories as specified in UL Standard 464. UL temperature range is -30° to 150°F (-34° to 66°C).
2. Typical dB ratings are calculated from measurements made with a conventional sound level meter and are indicative of output levels in an actual installation.
3. ULC only applies to MBA DC bells.

Size inches (mm)	Voltage	Model Number	Stock Number	Current (Max.)	Typical dB at 10 ft. (3m) (2)	Minimum dB at 10 ft. (3m) (1)
6 (150)	12VDC	MBA-6-12	1750070	.12A	85	76
8 (200)	12VDC	MBA-8-12	1750080	.12A	90	77
10 (250)	12VDC	MBA-10-12	1750060	.12A	92	78
6 (150)	24VDC	MBA-6-24	1750100	.06A	87	77
8 (200)	24VDC	MBA-8-24	1750110	.06A	91	79
10 (250)	24VDC	MBA-10-24	1750090	.06A	94	80
6 (150)	24VAC	PBA246	1806024*	.17A	91	78
8 (200)	24VAC	PBA248	1808024*	.17A	94	77
10 (250)	24VAC	PBA2410	1810024*	.17A	94	78
6 (150)	120VAC	PBA1206	1806120*	.05A	92	83
8 (200)	120VAC	PBA1208	1808120*	.05A	99	84
10 (250)	120VAC	PBA12010	1810120*	.05A	99	86

All DC bells are polarized and have built-in transient protection.
* Does not have ULC listing.

WARNING

In outdoor or wet installations, bell must be mounted with weatherproof backbox, BBK-1 or BBX-1. Standard electrical boxes will not provide a weatherproof enclosure. If the bell and/or assembly is exposed to moisture, it may fail or create an electrical hazard.

Bells Dimensions Inches (mm)
Fig. 1

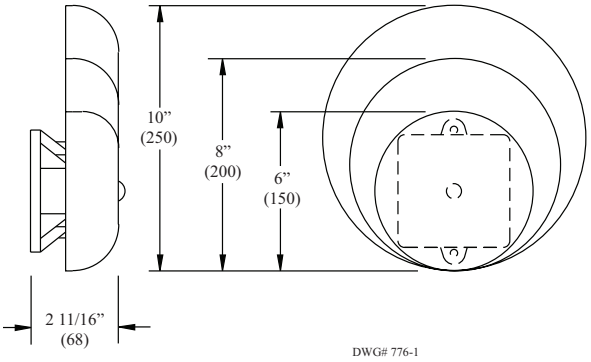

Weatherproof Backbox Dimensions Inches (mm)
Fig. 2

Box has one threaded 1/2" conduit entrance

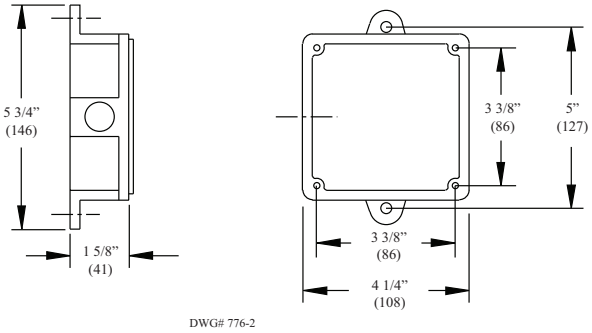

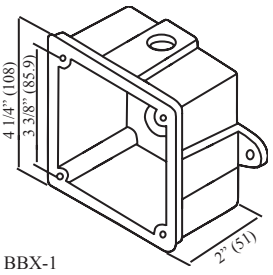

BBX-1

Wiring (rear view)
Fig. 3

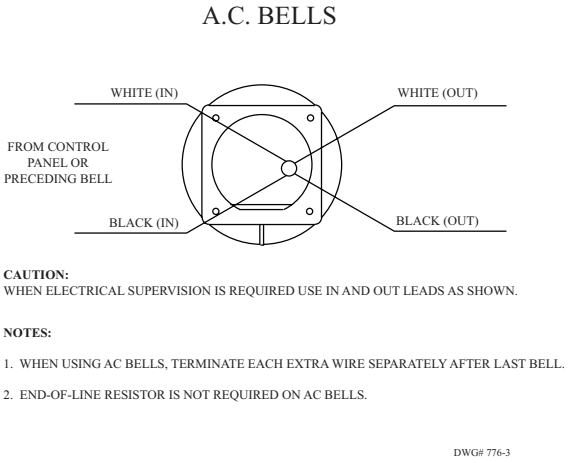

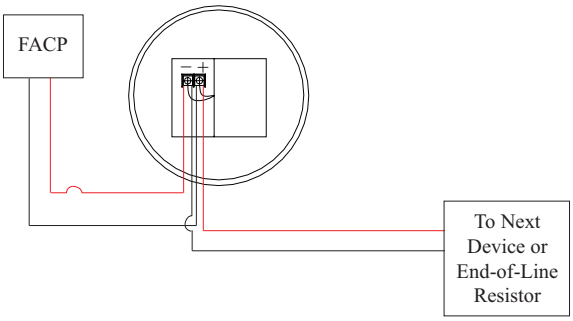

Installation

1. The bell shall be installed in accordance with NFPA 13, 72, or local AHJ. The top of the device shall be no less than 90" AFF and not less than 6" below the ceiling.
2. Remove the gong.
3. Connect wiring (see Fig. 3).
4. Mount bell mechanism to backbox (bell mechanism must be mounted with the striker pointing down).
5. Reinstall the gong (be sure that the gong positioning pin, in the mechanism housing, is in the hole in the gong).
6. Test all bells for proper operation and observe that they can be heard where required (bells must be heard in all areas as designated by the authority having jurisdiction).

⚠ WARNING

Failure to install striker down will prevent bell from operating.

VSR

VANE TYPE WATERFLOW ALARM SWITCH WITH RETARD

UL, CUL and CSFM Listed, FM Approved, LPCB Approved, For CE Marked (EN12259-5) / VdS Approved model use VSR-EU

Service Pressure: 450 PSI (31 BAR) - UL

Flow Sensitivity Range for Signal:
4-10 GPM (15-38 LPM) - UL

Maximum Surge: 18 FPS (5.5 m/s)

Contact Ratings: Two sets of SPDT (Form C)
10.0 Amps at 125/250VAC
2.0 Amps at 30VDC Resistive
10 mAmps min. at 24VDC

Conduit Entrances: Two knockouts provided for 1/2" conduit. Individual switch compartments suitable for dissimilar voltages.

Environmental Specifications:

- NEMA 4/IP54 Rated Enclosure suitable for indoor or outdoor use with factory installed gasket and die-cast housing when used with appropriate conduit fitting.
- Temperature Range: 40°F - 120°F, (4.5°C - 49°C) - UL
- Non-corrosive sleeve factory installed in saddle.

Service Use:

Automatic Sprinkler	NFPA-13
One or two family dwelling	NFPA-13D
Residential occupancy up to four stories	NFPA-13R
National Fire Alarm Code	NFPA-72

Specifications subject to change without notice.

Ordering Information			
Nominal Pipe Size		Model	Part Number
2"	DN50	VSR-2	1144402
2 1/2"	DN65	VSR-2 1/2	1144425
3"	DN80	VSR-3	1144403
3 1/2"	-	VSR-3 1/2	1144435
4"	DN100	VSR-4	1144404
5"	-	VSR-5	1144405
6"	DN150	VSR-6	1144406
8"	DN200	VSR-8	1144408

Optional: Cover Tamper Switch Kit, stock no. 0090148
Replaceable Components: Retard/Switch Assembly, stock no. 1029030

WARNING

- Installation must be performed by qualified personnel and in accordance with all national and local codes and ordinances.
- Shock hazard. Disconnect power source before servicing. Serious injury or death could result.
- Risk of explosion. Not for use in hazardous locations. Serious injury or death could result.

CAUTION

Waterflow switches that are monitoring wet pipe sprinkler systems shall not be used as the sole initiating device to discharge AFFF, deluge, or chemical suppression systems. Waterflow switches used for this application may result in unintended discharges caused by surges, trapped air, or short retard times.

Important: This document contains important information on the installation and operation of the VSR waterflow switches. Please read all instructions carefully before beginning installation. A copy of this document is required by NFPA 72 to be maintained on site.

General Information

The Model VSR is a vane type waterflow switch for use on wet sprinkler systems. It is UL Listed for use on a steel pipe; schedules 5 through 40, sizes 2" - 6" and is UL Listed and FM Approved for use on steel pipe; schedules 10 through 40, sizes 2" thru 8" (50 mm thru 200 mm). LPC approved sizes are 2" thru 8" (50 mm thru 200 mm). See Ordering Information chart.

The VSR may also be used as a sectional waterflow detector on large systems. The VSR contains two single pole, double throw, snap action switches and an adjustable, instantly recycling pneumatic retard. The switches are actuated when a flow of 10 GPM (38 LPM) or more occurs downstream of the device. The flow condition must exist for a period of time necessary to overcome the selected retard period.

Enclosure

The VSR switches and retard device are enclosed in a general purpose, die-cast housing. The cover is held in place with two tamper resistant screws which require a special key for removal. A field installable cover tamper switch is available as an option which may be used to indicate unauthorized removal of the cover. See bulletin number 5401103 for installation instructions of this switch.

Installation (see Fig. 1)

These devices may be mounted on horizontal or vertical pipe. On horizontal pipe they shall be installed on the top side of the pipe where they will be accessible. The device should not be installed within 6" (15 cm) of a fitting which changes the direction of the waterflow or within 24" (60 cm) of a valve or drain.

NOTE: Do not leave cover off for an extended period of time.

Drain the system and drill a hole in the pipe using a hole saw in a slow speed drill (see Fig. 1). Clean the inside pipe of all growth or other material for a distance equal to the pipe diameter on either side of the hole. Roll the vane so that it may be inserted into the hole; do not bend or crease it. Insert the vane so that the arrow on the saddle points in the direction of the waterflow. Take care not to damage the non-corrosive bushing in the saddle. The bushing should fit inside the hole in the pipe. Install the saddle strap and tighten nuts alternately to required torque (see the chart in Fig. 1). The vane must not rub the inside of the pipe or bind in any way.

⚠ CAUTION

Do not trim the paddle. Failure to follow these instructions may prevent the device from operating and will void the warranty. Do not obstruct or otherwise prevent the trip stem of the flow switch from moving when water flows as this could damage the flow switch and prevent an alarm. If an alarm is not desired, a qualified technician should disable the alarm system.

Fig. 1

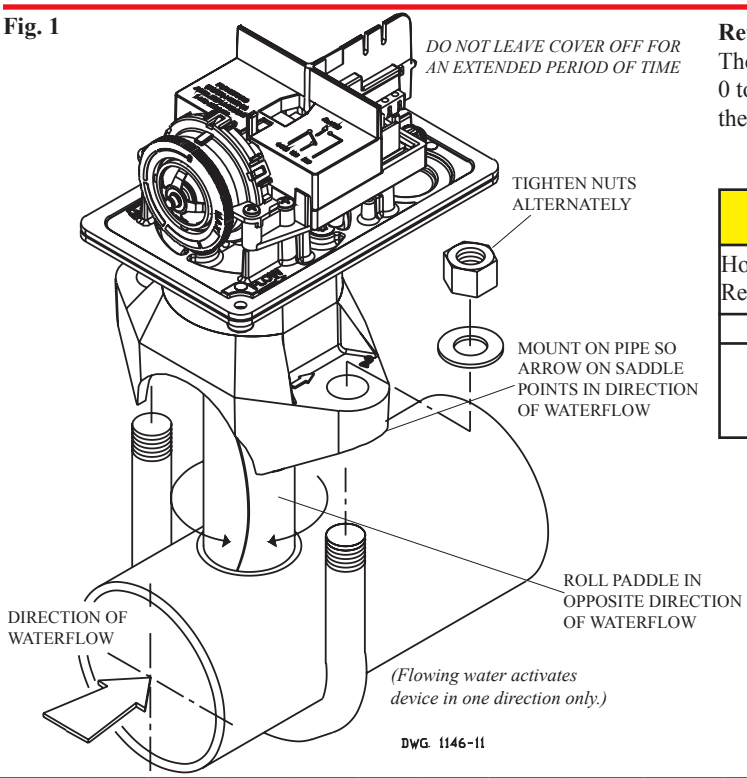

Retard Adjustment

The delay can be adjusted by rotating the retard adjustment knob from 0 to the max setting (60-90 seconds). The time delay should be set at the minimum required to prevent false alarms

CAUTION

Hole must be drilled perpendicular to the pipe and vertically centered. Refer to the Compatible Pipe/Installation Requirements chart for size.

Correct	Incorrect
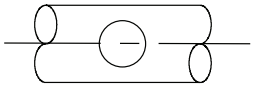	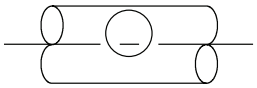

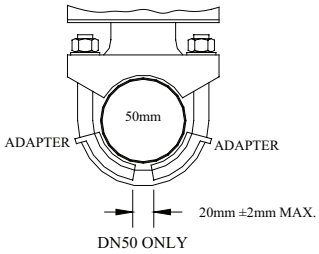

USE (2) 5180162 ADAPTERS AS SHOWN ABOVE

DWG# 1146-1F

Compatible Pipe/ Installation Requirements

Model	Nominal Pipe Size		Nominal Pipe O.D.		Pipe Wall Thickness										Hole Size		U-Bolt Nuts Torque	
					Lightwall		Schedule 10 (UL)		Schedule 40 (UL)		BS-1387 (LPC)		DN (VDS)					
	inch	mm	inch	mm	inch	mm	inch	mm	inch	mm	inch	mm	inch	mm	inch	mm	ft-lb	n-m
VSR-2	2	DN50	2.375	60.3	.065	1.651	0.109	2.77	0.154	3.91	0.142	3.6	0.091	2.3	1.25 + .125/- .062	33.0 ± 2.0	20	27
VSR-2 1/2	2.5	-	2.875	73.0	.084	2.134	0.120	3.05	0.203	5.16	-	-	-	-				
VSR-2 1/2	-	DN65	3.000	76.1	-	-	-	-	-	-	0.142	3.6	0.102	2.6				
VSR-3	3	DN80	3.500	88.9	.083	2.108	0.120	3.05	0.216	5.49	0.157	4.0	0.114	2.9	2.00 ± .125	50.8 ± 2.0		
VSR-3 1/2	3.5	-	4.000	101.6	-	-	0.120	3.05	0.226	5.74	-	-	-	-				
VSR-4	4	DN100	4.500	114.3	.084	2.134	0.120	3.05	0.237	6.02	0.177	4.5	0.126	3.2				
VSR-5	5	-	5.563	141.3	-	-	0.134	3.40	0.258	6.55	-	-	-	-				
VSR-6	6	DN150	6.625	168.3	.115	2.921	0.134	3.40	0.280	7.11	0.197	5.0	0.157	4.0				
VSR-8	8	DN200	8.625	219.1	-	-	0.148	3.76	0.322	8.18	0.248	6.3	0.177	4.5				

NOTE: For copper or plastic pipe use Model VSR-CF.

Fig. 2
To remove knockouts: Place screwdriver at inside edge of knockouts, not in the center.

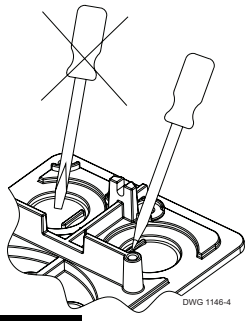

NOTICE
Do not drill into the base as this creates metal shavings which can create electrical hazards and damage the device. Drilling voids the warranty.

Fig. 3
Break out thin section of cover when wiring both switches from one conduit entrance.

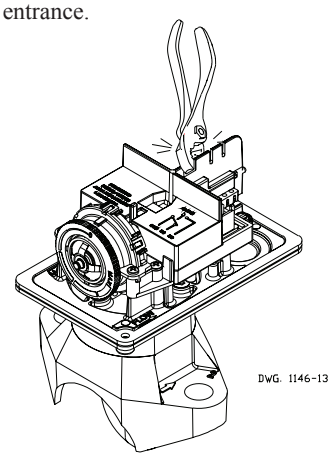

Fig. 4 Switch Terminal Connections Clamping Plate Terminal

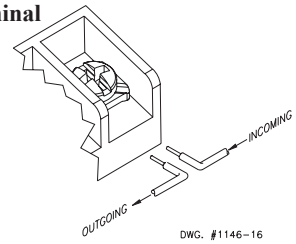

WARNING
An uninsulated section of a single conductor should not be looped around the terminal and serve as two separate connections. The wire must be severed, thereby providing supervision of the connection in the event that the wire become dislodged from under the terminal. Failure to sever the wire may render the device inoperable risking severe property damage and loss of life.

Do not strip wire beyond 3/8" of length or expose an uninsulated conductor beyond the edge of the terminal block. When using stranded wire, capture all strands under the clamping plate.

Fig. 5 Typical Electrical Connections

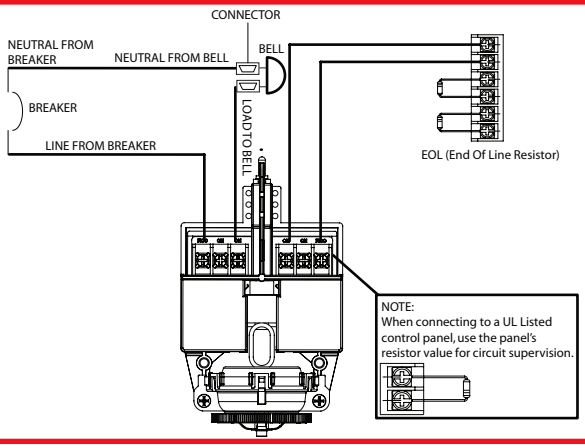

Notes:
1. The Model VSR has two switches, one can be used to operate a central station, proprietary or remote signaling unit, while the other contact is used to operate a local audible or visual annunciator.
2. For supervised circuits, see "Switch Terminal Connections" drawing and warning note (Fig. 4).

Testing
The frequency of inspection and testing for the Model VSR and its associated protective monitoring system shall be in accordance with applicable NFPA Codes and Standards and/or the authority having jurisdiction (manufacturer recommends quarterly or more frequently).

If provided, the inspector's test valve shall always be used for test purposes. If there are no provisions for testing the operation of the flow detection device on the system, application of the VSR is not recommended or advisable.
A minimum flow of 10 GPM (38 LPM) is required to activate this device.

NOTICE Advise the person responsible for testing of the fire protection system that this system must be tested in accordance with the testing instructions.

Fig. 6 Mounting Dimensions

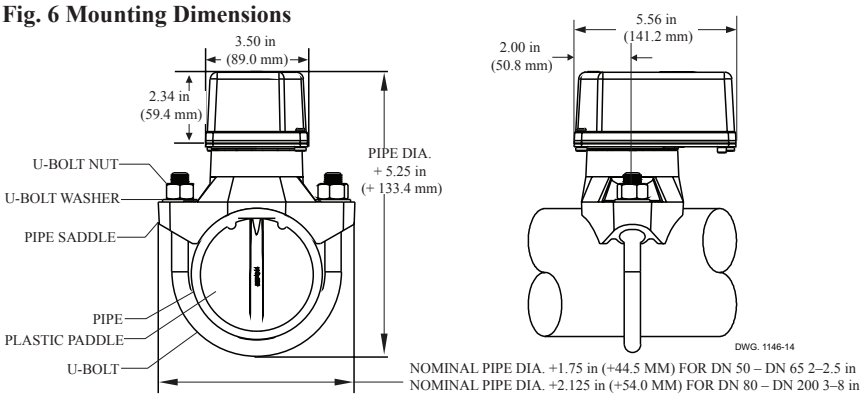

Fig. 7

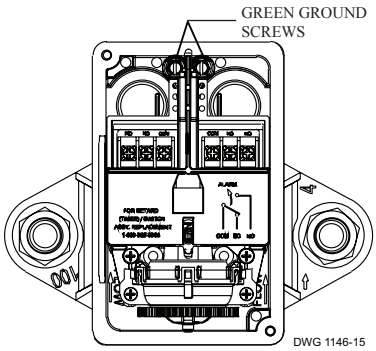

Maintenance

Inspect detectors monthly. If leaks are found, replace the detector. The VSR waterflow switch should provide years of trouble-free service. The retard and switch assembly are easily field replaceable. In the unlikely event that either component does not perform properly, please order replacement retard switch assembly stock #1029030 (see Fig. 8). There is no maintenance required, only periodic testing and inspection.

Retard/Switch Assembly Replacement (See Fig. 8)

NOTICE The Retard/Switch Assembly is field-replaceable without draining the system or removing the waterflow switch from the pipe

1. Make sure the fire alarm zone or circuit connected to the waterflow switch is bypassed or otherwise taken out of service.
2. Disconnect the power source for local bell (if applicable).
3. Identify and remove all wires from the waterflow switch.
4. Remove the (2) mounting screws holding retard/switch assembly to the base. **Do not** remove the (2) retard housing screws.
5. Remove the retard assembly by lifting it straight up over the tripstem.
6. Install the new retard assembly. Make sure the locating pins on the retard/switch assembly fit into the locating pin bosses on the base.
7. Re-install the (2) original mounting screws.
8. Reconnect all wires. Perform a flow test and place the system back in service.

Fig. 8

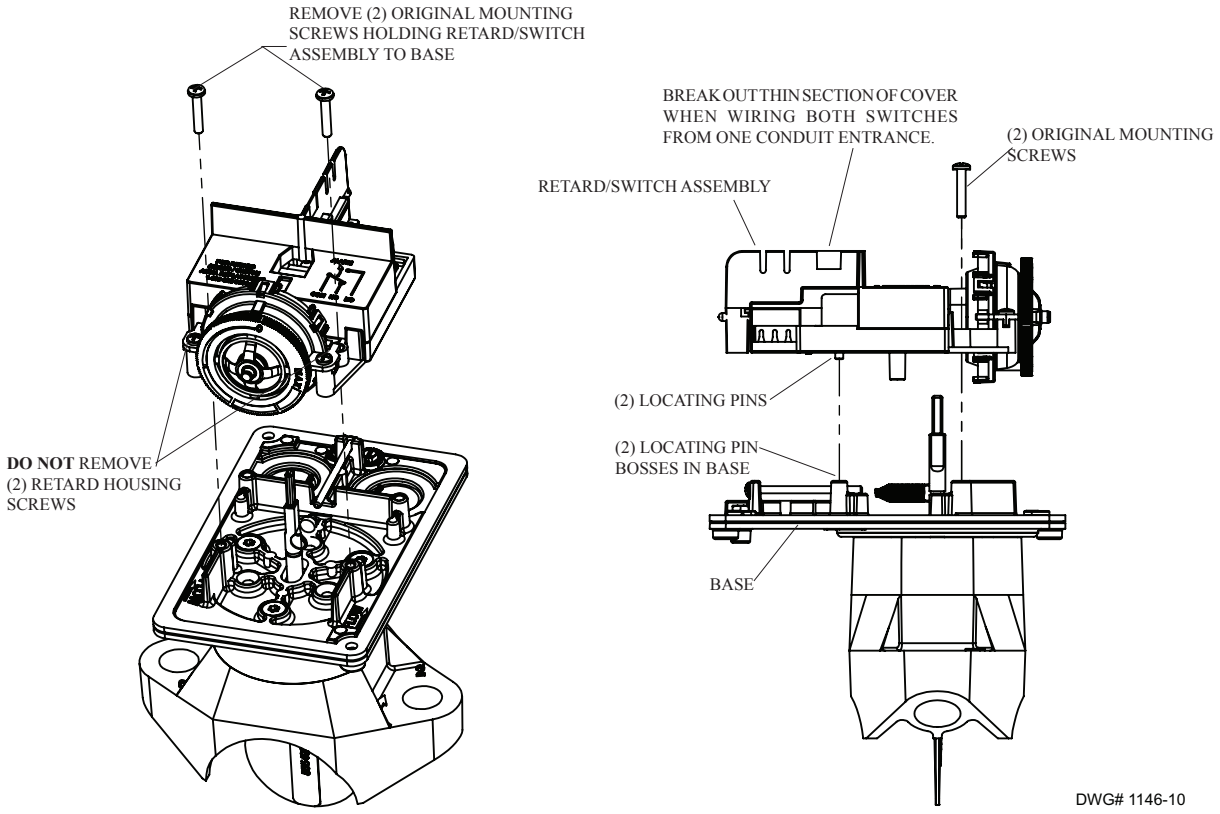

Removal of Waterflow Switch

- To prevent accidental water damage, all control valves should be shut tight and the system completely drained before waterflow detectors are removed or replaced.
- Turn off electrical power to the detector, then disconnect wiring.
- Loosen nuts and remove U-bolts.
- Gently lift the saddle far enough to get your fingers under it. With your fingers, roll the vane so it will fit through the hole while continuing to lift the waterflow detector saddle.
- Lift detector clear of pipe.

OSYSU Series

Outside Screw and Yoke Valve Supervisory Switch

Features

- NEMA 4X* (IP 65) and 6P (IP 67)

  **Enclosure is 4X. For additional corrosion protection of mounting hardware, use model OSYSU-2 CRH*
- -40º to 140º (-40ºC to 60ºC) operating temperature range
- Visual switch indicators
- Two conduit entrances
- Adjustable length trip rod
- Accomodates up to 12AWG wire
- Three position switch detects tampering and valve closure
- Knurled mounting bracket prevents slipping
- Fine adjustment feature for fast, easy installation
- RoHS compliant
- One or two SPDT contact models (-1,-2)

NOTICE

Before any work is done on the fire sprinkler or fire alarm system, the building owner or their authorized representative shall be notified. Before opening any closed valve, ensure that opening the valve will not cause any damage from water flow due to open or missing sprinklers, piping, etc.

Important: This document contains important information on the installation and operation of OS&Y valve supervisory switches. Please read all instructions carefully before beginning installation. A copy of this document is required by NFPA 72 to be maintained on site.

Description

The OSYSU is used to monitor the open position of an OS&Y (outside screw and yoke) type gate valve. This device is available in two models; the OSYSU-1, containing one set of SPDT (Form C) contacts and the OSYSU-2, containing two sets of SPDT (Form C) contacts. These switches mount conveniently to most OS&Y valves ranging in size from 2” to 12” (50mm to 300mm). They will mount on some valves as small as ½” (12,5mm).

The cover is held in place by two tamper resistant screws that require a special tool to remove. The tool is furnished with each device.

Testing

The operation of the OSYSU and its associated protective monitoring system shall be inspected, tested, and maintained in accordance with all applicable local and national codes and standards and/or the Authority Having Jurisdiction (manufacturer recommends quarterly or more frequently). A minimum test shall consist of turning the valve wheel towards the closed position. The OSYSU shall operate within the first two revolutions of the wheel. Fully close the valve and ensure that the OSYSU does not restore. Fully open the valve and ensure that the OSYSU restores to normal only when the valve is fully opened.

⚠ CAUTION

Close the valve fully to determine that the stem threads do not activate the switch. The switch being activated by the stem threads could result in a ***false valve open*** indication.

Technical Specifications

Dimensions	See Fig 8
Weight	1.6 lbs (0,73 kg)
Enclosure	Cover: Die Cast Finish: Red Powder Coat Base: Die Cast Finish: Black Powder Coat All parts have corrosion resistant finishes
Cover Tamper	Tamper Resistant Screws Optional Cover Tamper Switch Available
Contact Ratings	OSYSU-1: One Set of SPDT (Form C) OSYSU-2: Two Sets of SPDT (Form C) 10.0 Amps at 125/250 VAC 2.0 Amps at 30VDC Resistive 10 mAmps minimum at 24 VDC
Environmental Limitations	-40º F to 140ºF (-40ºC to 60ºC) NEMA 4X (IP 65) and NEMA 6P (IP 67) Enclosure (Use suitably rated conduit and connector) Indoor or Outdoor Use (See OSYSU-EX Bulletin 5400705 for Hazardous locations)
Conduit Entrances	Two Knockouts for 1/2” conduit provided (See Notice on Page 6 and Fig. 9 on Page 5)
Service Use	NFPA 13, 13D, 13R, 72

Specifications subject to change without notice

Theory of Operation

The OSYSU is a 3 position switch. The center position is the normal installation position. Normal is when the switch is installed on the OS&Y valve, the valve is fully open and the trip rod of the OSYSU is in the groove of the valve stem. Closing the valve causes the trip rod to ride up out of the groove and activates the switches. Removing the OSYSU from the valve causes the spring to pull the trip rod in the other direction and activates the switches.

Visual Switch Status Indication

There are 3 visual indicators to determine the status of the switches.

Fig 1; the actuator button of the micro switches are on the raised section of the switch actuator.

Fig 2; the trip rod is perpendicular to the base and lined up with the alignment mark on the mounting bracket.

Fig 3; the white visual indicator is visible through the window on the back of the switch actuator.

A final test is to meter the contacts marked COM and N.O. to ensure they are an open circuit when the valve is open and that they close and have continuity within 2 revolutions of turning the valve handwheel towards the closed position and the contacts remain closed as the valve is completely closed and until the valve is completely opened when the trip rod drops back into the groove in the valve stem.

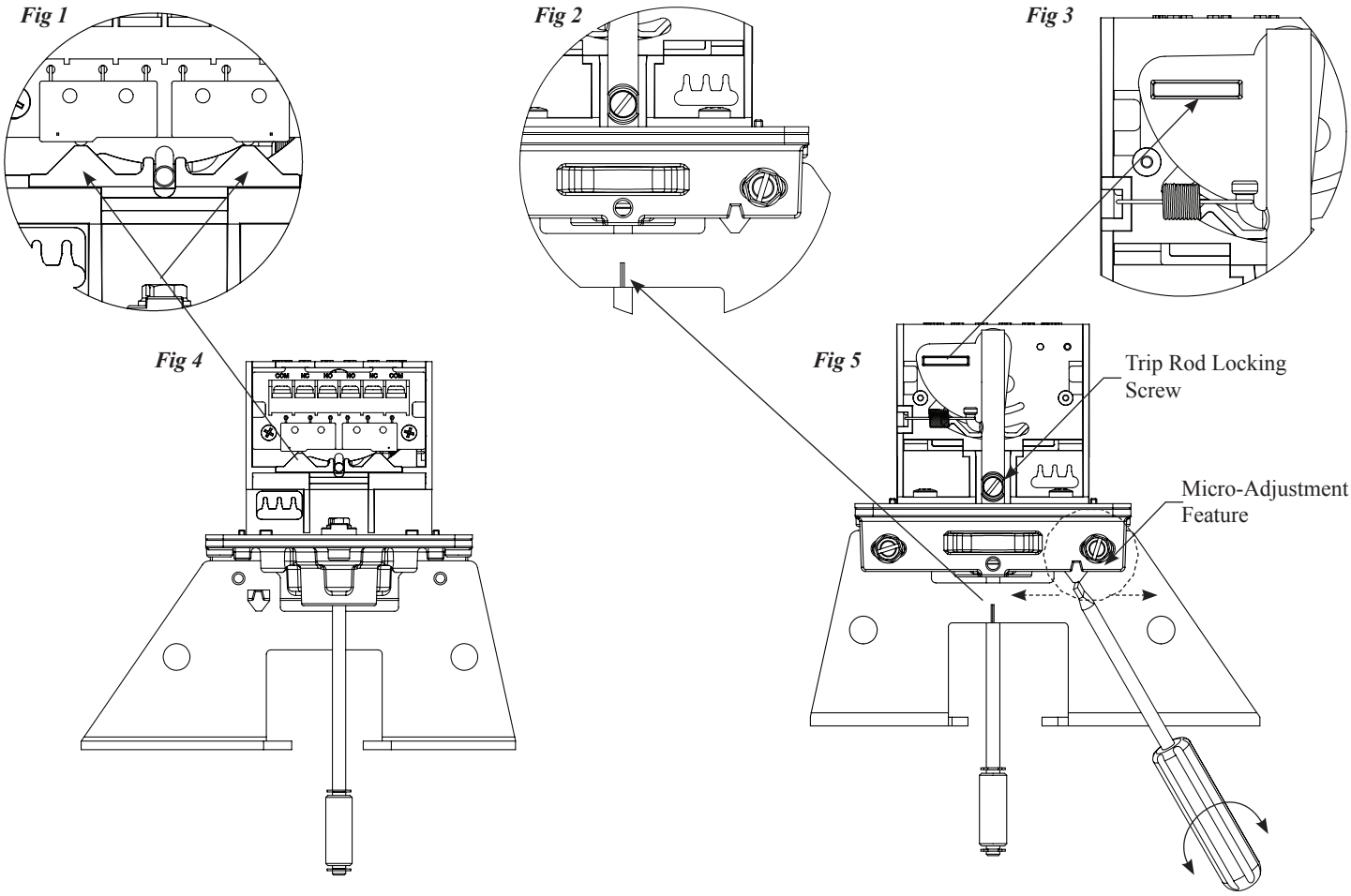

Fig 6

Small Valve Installation - 1/2” Through 2 1/2” Sizes

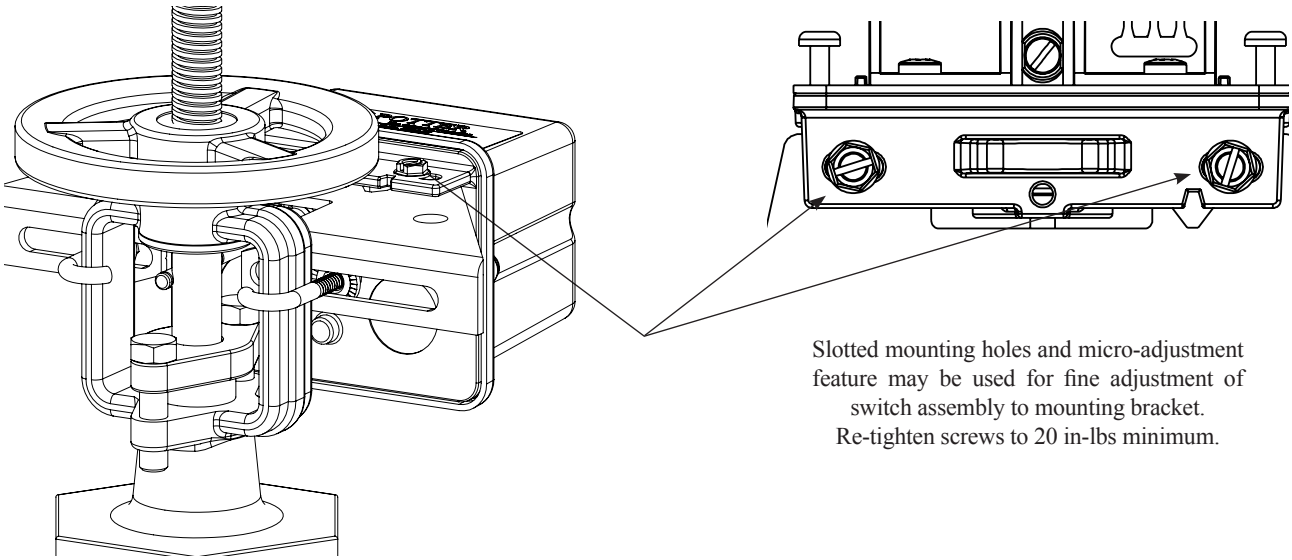

Small Valve Installation

NOTE: If the valve stem is pre-grooved at 1/8” minimum depth; proceed to step 7.

1. Remove and discard "E" ring and roller from the trip rod.
2. With the valve in the FULL OPEN position, locate the OSYSU across the valve yoke as far as possible from the valve gland so that the spring loaded trip rod of the OSYSU is pulled against the non threaded portion of the valve stem. Position the OSYSU with the bracket near the handwheel as shown in Fig. 6 if possible to avoid creating a pinch point between the wheel and the OSYSU.
3. Loosen the locking screw that holds the trip rod in place and adjust the rod length (see Fig. 5). When adjusted properly, the rod should extend past the valve screw, but not so far that it contacts the clamp bar. Tighten the locking screw to 5 in-lbs minimum to hold the trip rod in place and properly seal the enclosure.

   NOTE: If trip rod length is excessive, loosen the locking screw and remove the trip rod from the trip lever. Using pliers, break off the one (1) inch long notched section (see Fig. 10). Reinstall trip rod and repeat Step 3 procedure.
4. Mount the OSYSU loosely with the carriage bolts and clamp bar supplied. On valves with limited clearance use J-hooks supplied instead of the carriage bolts and clamp bar to mount the OSYSU.
5. Mark the valve stem at the center of the trip rod.
6. Remove the OSYSU. Utilizing a 3/16” or 1/4” diameter straight file, file a 1/8” minimum depth groove centered on the mark on the valve stem. Deburr and smooth the edges of the groove to prevent damage to the valve packing and to allow the trip rod to move easily in and out of the groove as the valve is operated.

   NOTE: A groove depth of up to approximately 3/16” can make it easier to install the OSYSU so that it does not restore as it rolls over by the threads of the valve stem.
7. Mount the OSYSU on the valve yoke with the spring loaded trip rod of the OSYSU pulled against the valve stem and centered in the groove of the stem. If possible, position the OSYSU with the flat side of the bracket toward the hand wheel, as shown in Fig. 6, to help avoid creating a pinch point between the wheel and OSYSU. When in this preferred mounting position, it is usually best to use the white indicator visible through the window, as illustrated in Fig. 3, to aid in initially locating the OSYSU in the correct position on the yoke. If the unit must be installed inverted with the white indicator no longer easily visible, use the visual indicators of the actuator buttons on the micro-switches, as illustrated in Fig. 1, or the trip rod alignment mark on the bracket, as illustrated in Fig. 2 , to aid in initially locating the OSYSU.
8. Final adjustment can be made by slightly loosening the two screws on the bracket and using the fine adjustment feature (see Fig. 5). The adjustment is correct when the plungers on the switches are depressed by the actuator and there is no continuity between the COM and NO terminals on the switches.
9. Tighten the adjustment screws and all mounting hardware securely (20 in-lbs minimum). Check to insure that the rod moves out of the groove easily and that the switches activate within two turns when the valve is operated from the FULL OPEN towards the CLOSED position.
10. Reinstall the cover and tighten the cover screws to 15 in-lbs minimum to properly seal the enclosure.

⚠ CAUTION

Close the valve fully to determine that the stem threads do not activate the switch. The switch being activated by the stem threads could result in a ***false valve open*** indication.

Large Valve Installation - 3” Through 12” Sizes

Fig 7

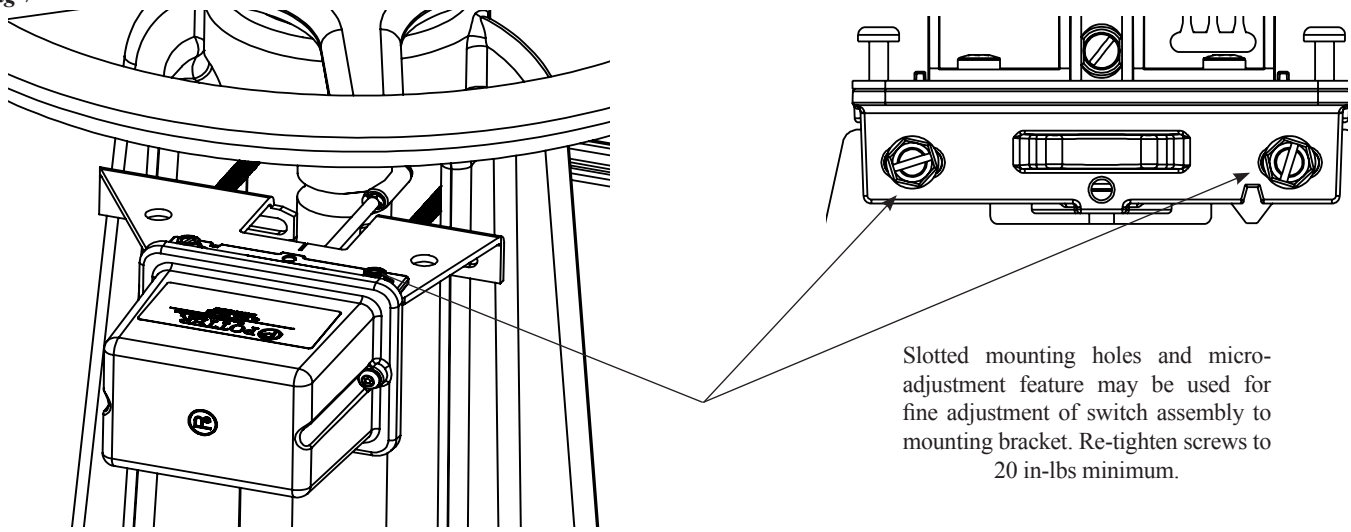

Large Valve Installation

NOTE: If the valve stem is pre-grooved at 1/8” minimum depth; proceed to step 6.

1. With the valve in the FULL OPEN position, locate the OSYSU across the valve yoke as far from the valve gland as possible so that the spring loaded trip rod of the OSYSU is pulled against the non threaded portion of the valve stem. Position the OSYSU with the bracket near the handwheel as shown in Fig. 7 if possible to avoid creating a pinch point between the wheel and the OSYSU.
2. Mount the OSYSU loosely with the carriage bolts and clamp bar supplied.
3. Loosen the locking screw that holds the trip rod in place and adjust the rod length (see Fig. 5). When adjusted properly, the rod should extend past the valve screw, but not so far that it contacts the clamp bar. Tighten the locking screw to 5 in-lbs minimum to hold the trip rod in place and properly seal the enclosure.

   NOTE: If trip rod length is excessive, loosen the locking screw and remove the trip rod from the trip lever. Using pliers, break off the one (1) inch long notched section (see Fig. 10). Reinstall trip rod and repeat Step 3 procedure.
4. Mark the valve stem at the center of the trip rod.
5. Remove the OSYSU. Utilizing a 3/8” or ½” diameter straight file, file a 1/8” minimum depth groove centered on the mark on the valve stem. Deburr and smooth the edges of the groove to prevent damage to the valve packing and to allow the trip rod to move easily in and out of the groove as the valve is operated.

   NOTE: A groove depth of up to approximately 3/16” can make it easier to install the OSYSU so that it does not restore as it rolls over by the threads of the valve stem.
6. Mount the OSYSU on the valve yoke with the spring loaded trip rod of the OSYSU pulled against the valve stem and centered in the groove of the stem. If possible, position the OSYSU with the flat side of the bracket toward the hand wheel, as shown in Fig. 7, to help avoid creating a pinch point between the wheel and OSYSU. When in this preferred mounting position, it is usually best to use the white indicator visible through the window, as illustrated in Fig. 3, to aid in initially locating the OSYSU in the correct position on the yoke. If the unit must be installed inverted with the white indicator no longer easily visible, use the visual indicators of the actuator buttons on the micro-switches, as illustrated in Fig. 1, or the trip rod alignment mark on the bracket, as illustrated in Fig. 2 , to aid in initially locating the OSYSU.
7. Final adjustment can be made by slightly loosening the two screws on the bracket and using the fine adjustment feature (see Fig. 5). The adjustment is correct when the plungers on the switches are depressed by the actuator and there is no continuity between the COM and NO terminals on the switches.
8. Tighten the adjustment screws and mounting hardware securely (minimum 20 in-lbs). Check to insure that the rod moves out of the groove easily and that the switches activate within two turns when the valve is operated from the FULL OPEN towards the CLOSED position.
9. Reinstall the cover and tighten the cover screws to 15 in-lbs minimum to properly seal the enclosure.

⚠ CAUTION

Close the valve fully to determine that the stem threads do not activate the switch. The switch being activated by the stem threads could result in a ***false valve open*** indication.

Dimensions

Fig 8

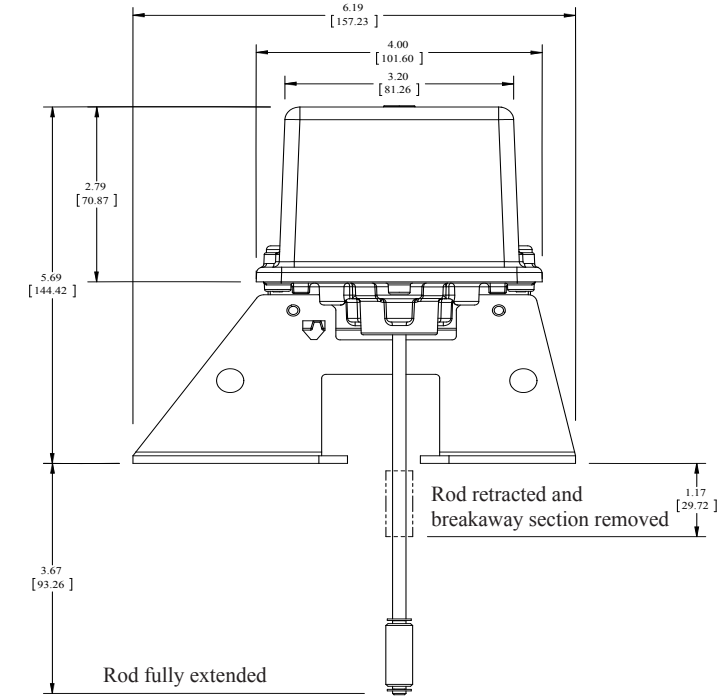

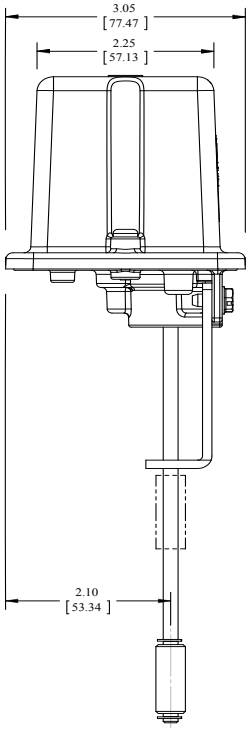

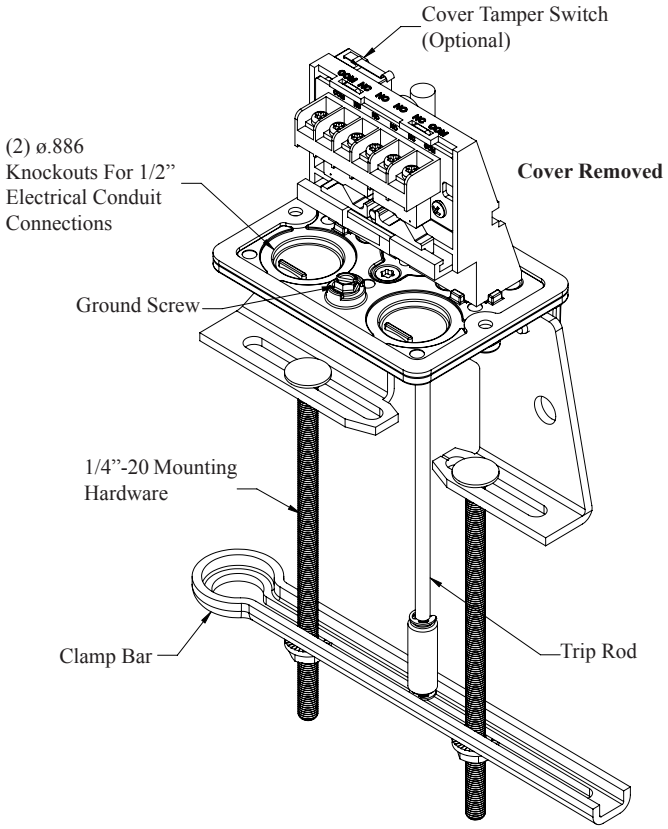

Knockout Removal

Fig 9

To remove knockouts: Place screwdriver at inside edge of knockouts, not in the center.

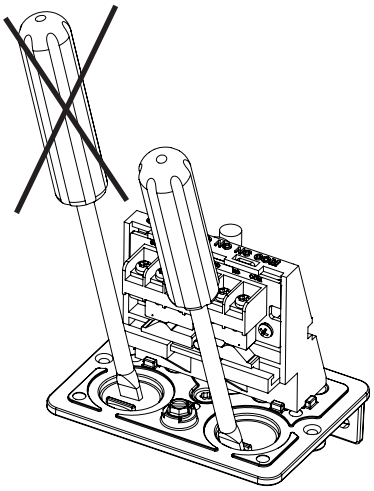

NOTE: Do not drill into the base as this creates metal shavings which can create electrical hazards and damage the device. Drilling voids the warranty.

Breaking Excessive Rod Length

Fig 10

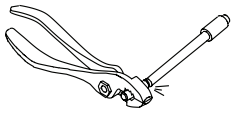

Switch Terminal Connections Clamping Plate Terminal

Fig 11

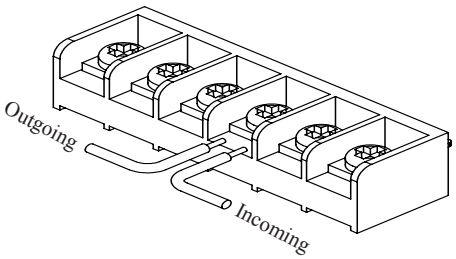

⚠ WARNING

An uninsulated section of a single conductor should not be looped around the terminal and serve as two separate connections. The wire must be severed, thereby providing supervision of the connection in the event that the wire become dislodged from under the terminal. Failure to sever the wire may render the device inoperable risking severe property damage and loss of life. Do not strip wire beyond 3/8" of length or expose an uninsulated conductor beyond the edge of the terminal block. When using stranded wire, capture all strands under the clamping plate.

NOTICE

All conduit and connectors selected for the installation of this product shall be suitable for the environment for which it is to be used and shall be installed to the manufacturer's installation instructions. For NEMA 4, 4X, 6, 6P installations, the cover screws are recommended to be tightened to 15 in-lbs minimum and the trip rod locking screw tightened to 5 in-lbs minimum to properly seal the enclosure.

Typical Electrical Connections

Fig 12

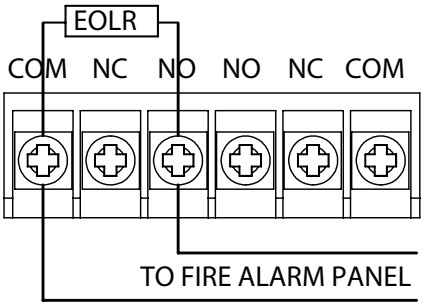

Ordering Information

Model	Description	Stock No.
OSYSU-1	Outside Screw & Yoke Supervisory Switch (Single switch)	1010102
OSYSU-2	Outside Screw & Yoke Supervisory Switch (Double switch)	1010202
OSYSU-2 CRH	Outside Screw & Yoke Supervisory Switch (Double Switch). Corrosion resistant hardware of 316 stainless steel & nickel plated to ASTM B377 Type V Brackets	1010210
	Cover Screw	5490424
	Hex Key for Cover Screws and Installation Adjustments	5250062
	Optional Cover Tamper Switch Kit	0090200

Engineering Specifications: OS&Y Valves

UL, CUL Listed / FM Approved and CE Marked valve supervisory switches shall be furnished and installed on all OS&Y type valves that can be used to shut off the flow of water to any portion of the fire sprinkler system, where indicated on the drawings and plans and as required by applicable local and national codes and standards. The supervisory switch shall be NEMA 4X and 6P rated and capable of being mounted in any position indoors or out and be completely submerged without allowing water to enter the enclosure.. The enclosure shall be held captive by tamper resistant screws. The device shall contain two ½" conduit entrances and one or two Single Pole Double Throw (SPDT) switches. There shall be a visual indicator to display the status of the switches. To aid in installation, it shall be possible to make fine adjustments to the position of the switch on the valve without loosening the mounting bracket from the valve. The device shall contain an adjustable length trip rod and roller, the trip rod shall be held captive by a set screw accessible upon removal of the cover. The switch contacts shall be rated at 10A, 125/250VAC and 2A, 30VDC. OS&Y Valve supervisory switch shall be model OSYSU-1 for the single switch model and OSYSU-2 for the two switch model manufactured by Potter Electric Signal Company LLC

NOTICE

Supervisory switches have a normal service life of 10-15 years. However, the service life may be significantly reduced by local environmental conditions.

Model 1011T
TESTanDRAIN®

Sectional Floor Control Test and Drain Valve with Pressure Gauge for Systems Requiring Pressure Relief Valve

Sizes:

¾"	1"	1¼"	1½"	2"

The AGF **Model 1011T TESTanDRAIN®** provides the test and express drain functions for wet fire sprinkler systems on multi-story installations requiring pressure relief (NFPA 13 and NFPA 13R). The **Model 1011A** features a **Model 7000 Pressure Relief Valve** with drain pipe, 3½" **Model 7500 Pressure Gauge** and 3-Way Globe Valve.

The **Model 1011T** is available in a full range of sizes (¾" to 2") with NPT connections (BSPT available). The **Model 7000 Pressure Relief Valve** (UL/FM) features a flushing handle and a 175 PSI factory rating (other pressure ratings available).

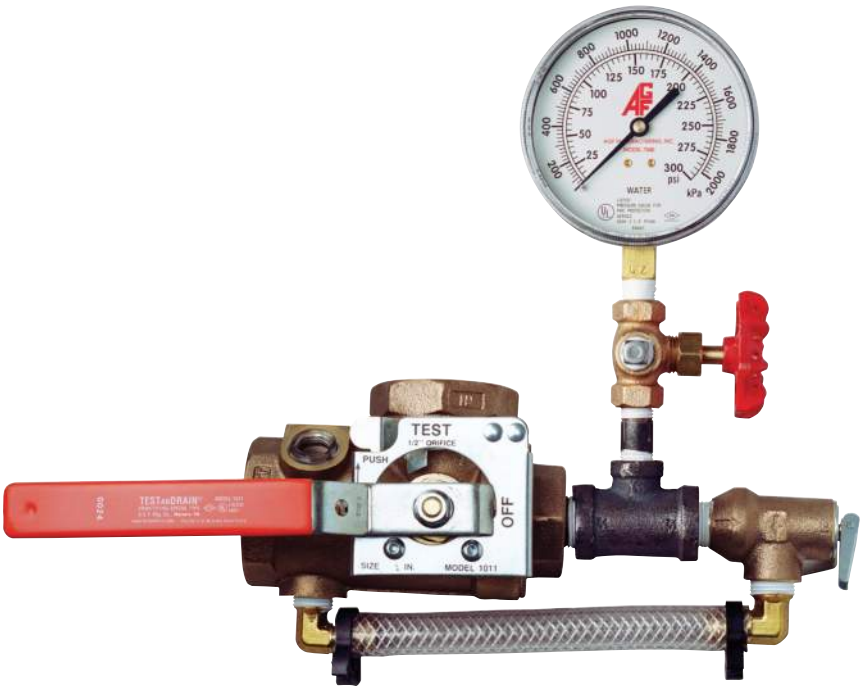

- Complies with NFPA 13 Requirements
- Compact, Single-Handle Ball Valve
- Tamper-Resistant Test Orifice and Sight Glasses
- 300 PSI rated.
- Specifiable orifice sizes: ⅜" (2.8K), 7⁄16" (4.2K), ½" (5.6K), 17⁄32" (8.0K), ⅝" (11.2K, ELO), ¾" (14.0K, ESFR), and K25
- Relieves Excess System Pressure caused by Surges or Temperature Changes
- Includes **Model 7500 Pressure Gauge** and UL/FM **Model 7600 Globe Valve**
- Shipped with Relief Valve and Bypass Drain Ports Plugged to Expedite Pressure Testing
- Locking Kit Available

Repair kits are available for all **TESTanDRAIN®** valves. Kit includes: Adapter Gasket (1), Ball (1), Valve Seats (2), Stem Packing (1), and Stem Washer (1). ***Valve and orifice size must be specified when ordering.***

NOTE: It is important to note that the pressure rating of the relief valve indicates an operating range of pressure for both opening and closing of the valve. Standard relief valves are required to OPEN in a range of pressure between 90% and 105% of their rating. The valves are required to CLOSE at a pressure above 80% of that rating. The relief valve should be installed where it is easily accessible for maintenance. Care should be taken that the relief valve CANNOT be isolated from the system when the system is operational. A relief valve should NEVER have a shutoff valve or a plug downstream of its outlet.

Reliability, Versatility, Code Compatibility

TESTANDRAIN is a registered trademark of AGF Manufacturing Inc.

Model 1011T

TEST AN DRAIN®

Model 1011T 300 PSI Bronze Ball Valve, Model 7000 Pressure Relief Valve, Model 7500 Pressure Gauge, and Model 7600 ¼" 3-Way Globe Valve

Dimensions

SIZE	A	B	C	D	E	F
¾"	10¼" (256 mm)	3⅜" (86 mm)	1 13/16" (46 mm)	4 9/16" (117 mm)	6⅜" (162.5 mm)	8¾" (119 mm)
1"	10¼" (256 mm)	3⅜" (86 mm)	1 13/16" (46 mm)	4 9/16" (117 mm)	6⅜" (162.5 mm)	8¾" (119 mm)
1¼"	10½" (263 mm)	3⅝" (91 mm)	1 15/16" (51 mm)	5 9/16" (141 mm)	7½" (192 mm)	9" (225 mm)
1½"	11½" (288 mm)	3⅞" (99 mm)	2⅝" (67 mm)	8¼" (207 mm)	10⅞" (274 mm)	9 11/16" (242 mm)
2"	11½" (288 mm)	3⅞" (99 mm)	2⅝" (67 mm)	8¼" (207 mm)	10⅞" (274 mm)	9 11/16" (242 mm)

Model 1011T - Front View

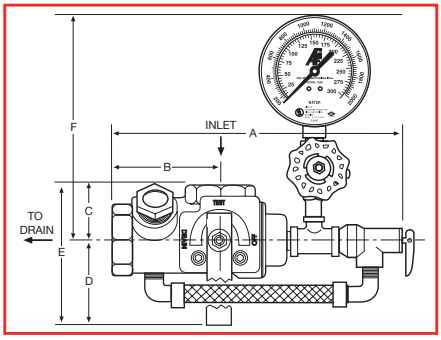

The Model 1011T provides the following…

From the 2013 Edition of NFPA 13

Chapter 8.16.2.4.1*	Provisions shall be made to properly drain all parts of the system.
Chapter 8.16.2.4.2 & 8.16.2.4.3	Drain connections, interior sectional or floor control valve(s) – shall be provided with a drain connection having a minimum size as shown in Table 8.16.2.4.2.
Chapter 8.16.2.4.4	Drains shall discharge outside or to a drain capable of handling the flow of the drain.
Chapter A.8.17.4.2	(Wet Pipe System) test connection is permitted to terminate into a drain capable of accepting full flow… using an approved sight test connection containing a smooth bore corrosion-resistant orifice giving a flow equivalent to one sprinkler…
Chapter 8.17.4.2.2	The test connection valve shall be accessible.
Chapter 8.17.4.2.4	shall be permitted to be installed in any location… downstream of the waterflow alarm.
Chapter 8.17.4.3.1	(Dry Pipe System) a trip test connection not less than 1" in diameter, terminating in a smooth bore corrosion-resistant orifice, to provide a flow equivalent to one sprinkler…
Chapter 8.17.4.3.2	The trip test connection… with a shutoff valve and plug not less than 1", at least one of which shall be brass.
Chapter 7.1.2	- a wet pipe system shall be provided with a listed relief valve set to operate at 175 PSI or 10 PSI in excess of the maximum system pressure, whichever is greater.
Chapter 8.16.1.2.3*	A listed relief valve of not less than ½" in size shall be provided on the discharge side of the pressure-reducing valve set to operate at a pressure not exceeding rated pressure of the system.
Chapter A.8.16.1.2.3	- consideration should be given to piping the discharge from the (pressure relief) valve
Chapter 8.16.1.2.2	Pressure gauges shall be installed on the inlet and outlet sides of each pressure reducing valve.

Orifice Sizes

⅜", 7/16", ½", 17/32", ⅝" ELO*, ¾" ESFR*, and K25**

Materials

Handle ..... Steel
Stem ..... Rod Brass
Ball..... C.P. Brass
Body ..... Bronze
Valve Seat..... Impregnated Teflon®
Indicator Plate .... Steel
Relief Valve ..... Bronze
Bypass Fittings... Brass
Bypass Tubing.... Nylobraid

Approvals

UL and ULC Listed:
(EX4019 & EX4533)
FM Approved
NYC-BSA No. 720-87-SM

MADE IN U.S.A.

USA Patent # 4741361 and Other Patents Pending

AGF Manufacturing Inc.
100 Quaker Lane, Malvern, PA 19355

Phone: 610-240-4900
Fax: 610-240-4906

www.testandrain.com

Job Name:_____

Architect:_____

Engineer:_____

Contractor:_____

*Available on 1¼" to 2" size units only • **Available on 1½" and 2" size units on

AnvilStar™

Fire Products Division of Anvil® International

www.anvilstar.com

MERIT®

Outlet Fittings for Fire Protection

Weld-Miser™ Tee-Let®

Welding Outlet Fittings

Unified Design™ Series

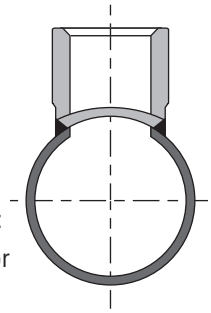

Merit's Unified Design Series carries all important design considerations into its entire line of welding branch outlet fittings.

Merit® Weld-Miser™ Tee-Lets® are designed and Manufactured to reduce the amount of weld required to install the Tee-Lets on thin wall or proprietary flow pipe. Typically only one weld-pass completes the installation. Merit Tee-Lets install with less weld volume than any other brand of welding outlet fittings for fire sprinkler applications. To accomplish this:

- The contoured end of the fittings employs a reduced outside diameter. Two major advantages are immediately apparent:
- The thinner wall on the contoured end permits welding temperatures to be matched to the thickness of the branch line or main thereby insuring complete penetration without cold welds, weld roll-off, burn-through or excessive distortion.
- On smaller sizes a heavier section is maintained on the threaded end of the fitting. This protects the threads from damage during shipping and handling prior to installation as well as from weld distortion.
- Each outlet size 1½" and larger, whether male or female threaded, cut grooved or beveled requires the same hole size in the header pipe. This simplifies the installation process.

General Specifications

- Tee-Let welding outlet fittings are manufactured from highly weldable steel which conforms to the chemical and physical requirements of ASTM A-53, Grades A or B, Type E. Ease of installation is assured when automatic welding equipment is used to install Merit Tee-Lets.
- Threads are cut in accordance with the requirements of ANSI B1.20.1, national standard for tapered pipe threads, or ISO-7-1 threads are available.
- Tee-Let threaded and grooved welding outlet fittings are UL/ULC Listed and FM Approved for use in the fire sprinkler systems installed in accordance with the requirements of NFPA Bulletin 13. They are rated for 300 PSI operation in fire sprinkler systems, and higher pressures in other non-critical piping systems.
- Tee-Lets are offered in a wide variety of header sizes. The consolidated header sizes shown in the following charts allow the fittings to be installed on more than one header size, permitting the first size listed to fit the header perfectly, while a small gap along the longitudinal center line of the header will appear for the second size listed.
- Merit® Weld-Miser™ Tee-Lets® are identified by a lot number that provides full traceability per ISO 9000 specifications.

For Your Piping Systems Specify Weld-Miser™ Tee-Let®

Branch Outlet Fittings shall be Merit Weld-Miser Tee-Let, Lightweight forged steel, employing low weld volume profile to provide for full penetration welds with minimum burn through and pipe distortion on Schedule 5 thru 10, proprietary thin wall, and standard wall pipe. Threads are to be ANSI B1.20.1, or ISO-7-1, and the bore of the fittings calculated to improve flow. Welding outlets to be UL Listed, FM Approved for use conforming to NFPA, Bulletin 13 and pressure rated for 300 PSI maximum.

How to Order - Use either of the following methods for ordering Merit® Weld-Miser™ Tee-Let®.

Method No. 1

Specify quantity desired followed by the part number shown in the "dimensions" chart for the type and size of outlet desired.

Quantity	Part Number

Method No. 2

Use the following system:

Quantity	–	Outlet Size	x	Header Size	Weight	Type End	Merit Tee-Let	Steel Material
↓ Always order a few more than actually required for the job.		↓ Column "A" of Chart		↓ Insert size consolidation from Column "B" of chart.	↓ Sch. 10 Standard	↓ A - Female Thread B - Male Thread C - Cut Groove C/R - Roll Groove		

ANVILStar™ Fire Products Division

Weld-Miser™ Tee-Let®

Welding Outlet Fittings

For Fire Protection & Other Low Pressure Piping Systems

Merit Weld-Miser™ Tee-Let® Welding Branch Outlet Fittings offer the user a high strength, low cost forged threaded and grooved line of fittings specifically designed and manufactured to be installed on Schedules 5 thru 10, proprietary thin wall flow pipe and standard wall pipe.

Merit Tee-Lets are forged steel welding outlet fittings. The material used in manufacture meets the chemical and physical requirements of ASTM A 53, Grades A or B, Type E, A-135, A-795, Tee-Lets employ a low weld volume design to provide for either a partial or full penetration weld employing a single pass with minimum burn-through and pipe distortion. Weld Miser Tee-Lets are recommended for use on proprietary thin wall, Schedules 5, 10 and 40 pipe. Threads comply with ANSI B1.20.1 or ISO7/1. They are UL Listed and FM Approved for use conforming to the requirements of Bulletin 13 1999 of the National Fire Protection Association. When used in fire sprinkler systems, Tee-Lets are rated for 300 psi. When used in mechanical systems, maximum pressures are calculated using criteria developed for ASME B31 piping code.

APPROVED

For listing/approval details contact your AnvilStar™ Representative.

Tee-Let Welded Outlet Fitting (UL VIZU — EX6032, FM Approval Guide Chapter 1 – Pipe Fittings)

Outlet Model	Outlet Pipe Size (Inch)	Header Pipe Size (Inch)	Rated Pressure (psig)
Tee-Let Type A (F-Threaded End)	½, ¾, 1	½ - 8 (Sch.10, 40)	300
	1¼, 1½, 2, 2½, 3, 4	½ - 4 (Sch. 5, DynaFlow)	
	2	4 (EZ-Flow)	
	2, 4	6 (EZ-Flow)	
Tee-Let Type C (Grooved End)	1¼ - 8	1¼ - 8 (Sch.10, 40)	300
	2½ - 8	½ - 4 (Sch. 5, DynaFlow)	
Tee-Let Type C/R (Roll Grooved End)	1¼ - 6	1¼ - 8 (All Schedules)	300

1) Size-on-size (i.e. 2 x 2) Tee-Lets are not FM Approved.

2) FM rated working pressure when welded on Sch. 5 or non-threadable lightwall pipe is 175 psi.

Weld-Miser™ Tee-Let®

Welding Outlet Fittings

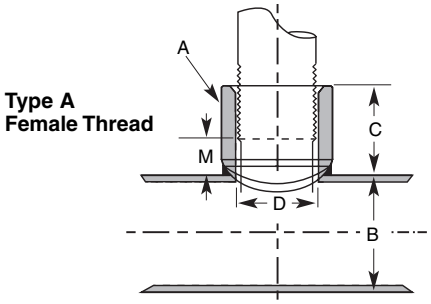

Weld-Miser™ Tee-Let® Dimensions & Part Numbers

Part Number	Nominal Outlet A	Nominal Header B	Outlet Length C	Inside Diameter D	Make Up M	Weight Each
NPT (BSPT)	In (mm)	In (mm)	In (mm)	In (mm)	In (mm)	Lb. (kg)
1002002	¼ x	1¼ - 8				0.080
–	6 x	6 - 200				0.04
1005012		1¼ - 1½	1.063	0.700	0.500	0.171
–		32 - 40	27.0	17.8	12.7	0.08
1005015	½ x	1½ - 2	1.063	0.700	0.500	0.171
–	13 x	40 - 50	27.0	17.8	12.7	0.08
1005020		2 - 2½	1.063	0.700	0.500	0.171
–		50 - 65	27.0	17.8	12.7	0.08
1005025		2½ - 8	1.063	0.700	0.500	0.169
–		65 - 200	27.0	17.8	12.7	0.08
1007012		1¼ - 1½	1.125	0.900	0.500	0.260
–		32 - 40	28.6	22.9	12.7	0.12
1007015	¾ x	1½ - 2	1.125	0.900	0.500	0.260
–	19 x	40 - 50	28.6	22.9	12.7	0.12
1007020		2 - 2½	1.125	0.900	0.500	0.260
–		50 - 65	28.6	22.9	12.7	0.12
1007025		2½ - 8	1.125	0.900	0.500	0.256
–		65 - 200	28.6	22.9	12.7	0.12
1010012		1¼ - 1½	1.250	1.145	0.500	0.331
1110012		32 - 40	31.8	29.1	12.7	0.15
1010015		1½ - 2	1.250	1.145	0.500	0.331
1110015		40 - 50	31.8	29.1	12.7	0.15
1010020	1 x	2 - 2½	1.250	1.145	0.500	0.320
1110020	25 x	50 - 65	31.8	29.1	12.7	0.15
1010025		2½ - 3	1.250	1.145	0.500	0.314
1110025		65 - 80	31.8	29.1	12.7	0.14
1010030		3 - 4	1.250	1.145	0.500	0.309
1110030		80 - 100	31.8	29.1	12.7	0.14
1010050		5 - 8	1.250	1.145	0.500	0.291
1110050		125 - 200	31.8	29.1	12.7	0.13
1012012		1¼ - 1½	1.375	1.490	0.500	0.432
1112012		32 - 40	34.9	37.8	12.7	.019
1012015		1½ - 2	1.375	1.490	0.500	0.421
1112015		40 - 50	34.9	37.8	12.7	.019
1012020	1¼ x	2 - 2½	1.375	1.490	0.500	0.421
1112020	32 x	50 - 65	34.9	37.8	12.7	.019
1012025		2½ - 3	1.375	1.490	0.500	0.411
1112025		65 - 80	34.9	37.8	12.7	.019
1012030		3 - 4	1.375	1.490	0.500	0.389
1112030		80 - 100	34.9	37.8	12.7	.018
1012050		5 - 8	1.375	1.490	0.500	0.389
1112050		125 - 200	34.9	37.8	12.7	.018
1015015		1½	1.625	1.610	0.875	0.477
1115015		40	41.3	40.9	22.2	.022
1015020		2	1.625	1.610	0.875	0.477
1115020		50	41.3	40.9	22.2	.022
1015025	1½ x	2½	1.625	1.610	0.875	0.477
1115025	40 x	65	41.3	40.9	22.2	.022
1015030		3 - 4	1.625	1.610	0.875	0.477
1115030		80 - 100	41.3	40.9	22.2	.022
1015040		4	1.625	1.610	0.875	0.477
1115040		100	41.3	40.9	22.2	.022
1015050		5 - 8	1.625	1.610	0.875	0.477
1115050		125 - 200	41.3	40.9	22.2	.022

Weld-Miser™ Tee-Let® Dimensions & Part Numbers

Part Number	Nominal Outlet A	Nominal Header B	Outlet Length C	Inside Diameter D	Make Up M	Weight Each
NPT (BSPT)	In (mm)	In (mm)	In (mm)	In (mm)	In (mm)	Lb. (kg)
1020020		2	1.750	2.067	0.875	0.857
1120020		50	44.5	52.5	22.2	0.38
1020025		2½	1.750	2.067	0.875	0.829
1120025		65	44.5	52.5	22.2	0.38
1020030		3	1.750	2.067	0.875	0.829
1120030		80	44.5	52.5	22.2	0.39
1020040	2 x	4	1.750	2.067	0.875	0.800
1120040	50 x	100	44.5	52.5	22.2	0.36
1020050		5	1.750	2.067	0.875	0.743
1120050		125	44.5	52.5	22.2	0.34
1020060		6	1.750	2.067	0.875	0.743
1120060		150	44.5	52.5	22.2	0.34
1020080		8	1.750	2.067	0.875	0.743
1120080		200	44.5	52.5	22.2	0.34
1025025		2½	2.215	2.469	1.125	1.250
1125025		65	54.0	62.7	28.6	0.55
1025030		3	2.215	2.469	1.125	1.200
1125030		80	54.0	62.7	28.6	0.55
1025040		4	2.215	2.469	1.125	1.150
1125040	2½ x	100	54.0	62.7	28.6	0.52
1025050	65 x	5	2.215	2.469	1.125	1.150
1125050		125	54.0	62.7	28.6	0.52
1025060		6	2.215	2.469	1.125	1.150
1125060		150	54.0	62.7	28.6	0.52
1025080		8	2.215	2.469	1.125	1.150
1125080		200	54.0	62.7	28.6	0.52
1030030		3	2.500	3.068	1.500	1.750
–		80	63.5	77.9	38.1	0.79
1030040		4	2.500	3.068	1.500	1.700
–		100	63.5	77.9	38.1	0.77
1030050	3 x	5	2.500	3.068	1.500	1.700
–	80 x	125	63.5	77.9	38.1	0.77
1030060		6	2.500	3.068	1.500	1.650
–		150	63.5	77.9	38.1	0.75
1030080		8	2.500	3.068	1.500	1.650
–		200	63.5	77.9	38.1	0.75
1040040		4	3.000	4.026	2.000	3.000
–		100	76.2	102.3	50.8	1.36
1040050		5	3.000	4.026	2.000	2.900
–	4 x	125	76.2	102.3	50.8	1.32
1040060	100 x	6	3.000	4.026	2.000	2.800
–		150	76.2	102.3	50.8	1.27
1040080		8	3.000	4.026	2.000	2.800
–		200	76.2	102.3	50.8	1.27

Note:
Part #1002002 is not UL Listed or FM Approved.
All size-on-size (i.e. 2 x 2) Tee-Lets are not FM Approved.

AnvilStar™
Fire Products Division

Weld-Miser™ Tee-Let®

Welding Outlet Fittings

Type B
Male Thread
Standard Weight

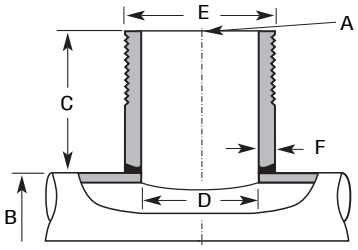

Type C
Cut Groove
Standard Weight

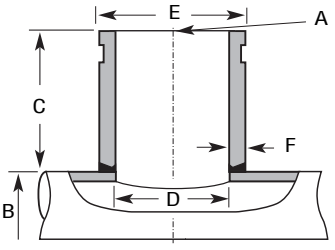

WELD-MISER™ TEE-LET® - DIMENSIONS (NOMINAL SIZES 1" THRU 2")

Male Thread Std. Wt.	Cut Groove Std. Wt.	Nominal Outlet A	Nominal Header B	Outlet Length C	Inside Diameter D	Outside Diameter E	Wall Thickness F
NPT (BSPT)	*NPT (BSPT)*	*In.(mm)*	*In.(mm)*	*In.(mm)*	*In.(mm)*	*In.(mm)*	*In.(mm)*
1310012	2010012		1¼ - 1½ *32 - 40*	3 *80*	1.049 *26.6*	1.315 *33.4*	0.133 *3.4*
1310015	2010015		1½ - 2 *40 - 50*	3 *80*	1.049 *26.6*	1.315 *33.4*	0.133 *3.4*
1310020	2010020	1 x *25 x*	2 - 2½ *50 - 65*	3 *80*	1.049 *26.6*	1.315 *33.4*	0.133 *3.4*
1310025	2010025		2½ - 4 *65 - 100*	3 *80*	1.049 *26.6*	1.315 *33.4*	0.133 *3.4*
1310050	2010050		5 - 8 *125 - 200*	3 *80*	1.049 *26.6*	1.315 *33.4*	0.133 *3.4*
1312012	2012012		1¼ *32*	3 *80*	1.368 *34.7*	1.660 *42.2*	0.140 *3.6*
1312015	2012015		1½ *40*	3 *80*	1.368 *34.7*	1.660 *42.2*	0.140 *3.6*
1312020	2012020	1¼ x *32 x*	2 - 2½ *50 - 65*	3 *80*	1.368 *34.7*	1.660 *42.2*	0.140 *3.6*
1312025	2012025		3 - 4 *80 - 100*	3 *80*	1.368 *34.7*	1.660 *42.2*	0.140 *3.6*
1312050	2012050		5 - 8 *125 - 200*	3 *80*	1.368 *34.7*	1.660 *42.2*	0.140 *3.6*
1315015	2015015		1½ *40*	3 *80*	1.610 *40.9*	1.900 *48.3*	0.145 *3.7*
1315020	2015020		2 *50*	3 *80*	1.610 *40.9*	1.900 *48.3*	0.145 *3.7*
1315025	2015025	1½ x *40 x*	2½ *65*	3 *80*	1.610 *40.9*	1.900 *48.3*	0.145 *3.7*
1315030	2015030		3 - 4 *80 - 100*	3 *80*	1.610 *40.9*	1.900 *48.3*	0.145 *3.7*
1315050	2015050		5 - 8 *125 - 200*	3 *80*	1.610 *40.9*	1.900 *48.3*	0.145 *3.7*
1320020	2020020		2 *50*	3 *80*	2.067 *52.5*	2.375 *60.3*	0.154 *3.9*
1320025	2020025		2½ *65*	3 *80*	2.067 *52.5*	2.375 *60.3*	0.154 *3.9*
1320030	2020030		3 *80*	3 *80*	2.067 *52.5*	2.375 *60.3*	0.154 *3.9*
1320035	2020035	2 x *50 x*	4 *100*	3 *80*	2.067 *52.5*	2.375 *60.3*	0.154 *3.9*
1320050	2020050		5 *125*	3 *80*	2.067 *52.5*	2.375 *60.3*	0.154 *3.9*
1320060	2020060		6 *150*	3 *80*	2.067 *52.5*	2.375 *60.3*	0.154 *3.9*
1320080	2020080		8 *200*	3 *80*	2.067 *52.5*	2.375 *60.3*	0.154 *3.9*

Note: Tee-Lets are manufactured to fit size-on-size, that is the contoured shape on a given Tee-Let is made to fit perfectly on the first listed header size. If installed on the second header size marked on the fitting, a slight gap of approximately 1⁄32" will appear along the longitudinal centerline of the header. For example, a 1" x 2 - 2½" Tee-Let, is a 1" outlet fitting manufactured to fit perfectly on the 2" header size listed, while leaving a 1⁄32" gap along the longitudinal centerline of the 2½" size. If a perfect fit is required for a 2½" header pipe, then a 1" x 2½ - 3" Tee-Let would be ordered. Size consolidations are employed to reduce inventory and provide for greater flexibility.

Weld-Miser™ Tee-Let®

Welding Outlet Fittings

Type B
Male Thread
Standard Weight

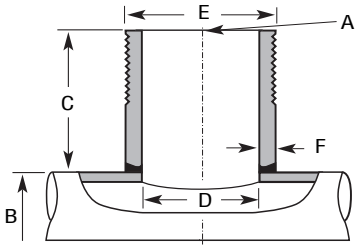

Type C
Cut Groove
Standard Weight

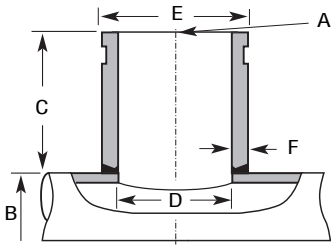

Type C/R
Roll Groove
Schedule 10

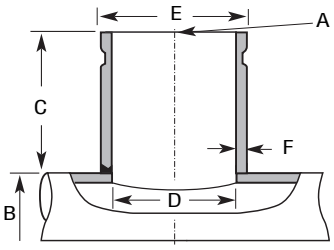

WELD-MISER™ TEE-LET® - DIMENSIONS (NOMINAL SIZES 2½" THRU 8")

Male Thread Std. Wt.	Cut Groove Std. Wt.	Roll Groove Sch. 10	Nominal Outlet A	Nominal Header B	Outlet Length C	Inside Diameter - D		Outside Diameter E	Wall Thickness - F	
						Standard Weight	Schedule 10		Standard Weight	Schedule 10
NPT (ISO-7-1)	*NPT (ISO-7-1)*	*NPT (ISO-7-1)*	*In.(mm)*	*In.(mm)*	*In.(mm)*	*In.(mm)*	*In.(mm)*	*In.(mm)*	*In.(mm)*	*In.(mm)*
1325025	2025025	2225025	2½ x	2½	3	2.469	2.635	2.875	0.203	0.120
	2125025		*65 x*	*65*	*80*	*62.7*	*67.0*	*76.2*	*5.0*	*3.0*
1325030	2025030	2225030		3	3	2.469	2.635	2.875	0.203	0.120
	2125030			*80*	*80*	*62.7*	*67.0*	*76.2*	*5.0*	*3.0*
1325035	2025035	2225035		4	3	2.469	2.635	2.875	0.203	0.120
	2125035			*100*	*80*	*62.7*	*67.0*	*76.2*	*5.0*	*3.0*
1325050	2025050	2225050		5	3	2.469	2.635	2.875	0.203	0.120
	2125050			*125*	*80*	*62.7*	*67.0*	*76.2*	*5.0*	*3.0*
1325060	2025060	2225060		6	3	2.469	2.635	2.875	0.203	0.120
	2125060			*175*	*80*	*62.7*	*67.0*	*76.2*	*5.0*	*3.0*
1325080	2025080	2225080		8	3	2.469	2.635	2.875	0.203	0.120
	2125080			*200*	*80*	*62.7*	*67.0*	*76.2*	*5.0*	*3.0*
1330030	2030030	2230030	3 x	3	3	3.068	3.260	3.500	0.216	0.120
			80 x	*80*	*80*	*78.0*	*83.0*	*88.0*	*5.0*	*3.0*
1330035	2030035	2230035		3½	3	3.068	3.260	3.500	0.216	0.120
				85	*80*	*78.0*	*83.0*	*88.0*	*5.0*	*3.0*
1330040	2030040	2230040		4	3	3.068	3.260	3.500	0.216	0.120
				100	*80*	*78.0*	*83.0*	*88.0*	*5.0*	*3.0*
1330050	2030050	2230050		5	3	3.068	3.260	3.500	0.216	0.120
				125	*80*	*78.0*	*83.0*	*88.0*	*5.0*	*3.0*
1330060	2030060	2230060		6	3	3.068	3.260	3.500	0.216	0.120
				150	*80*	*78.0*	*83.0*	*88.0*	*5.0*	*3.0*
1330080	2030080	2230080		8	3	3.068	3.260	3.500	0.216	0.120
				200	*80*	*78.0*	*83.0*	*88.0*	*5.0*	*3.0*
1340040	2040040	2240040	4 x	4	4	4.026	4.260	4.500	0.237	0.120
			100 x	*100*	*100*	*102.0*	*108.0*	*114.0*	*6.0*	*3.0*
1340050	2040050	2240050		5	4	4.026	4.260	4.500	0.237	0.120
				125	*100*	*102.0*	*108.0*	*114.0*	*6.0*	*3.0*
1340060	2040060	2240060		6	4	4.026	4.260	4.500	0.237	0.120
				150	*100*	*102.0*	*108.0*	*114.0*	*6.0*	*3.0*
1340080	2040080	2240080		8	4	4.026	4.260	4.500	0.237	0.120
				200	*100*	*102.0*	*108.0*	*114.0*	*6.0*	*3.0*
–	2060060	2260060	6 x	6	4	6.065	6.357	6.625	0.280	0.134
			150 x	*150*	*100*	*155.0*	*161.5*	*168.3*	*7.1*	*3.0*
–	2060080	2260080		8	4	6.065	6.357	6.625	0.280	0.134
				200	*100*	*155.0*	*161.5*	*168.3*	*7.1*	*3.0*
–	2080080	–	8 x	8	4	7.981	8.329	8.625	0.322	0.148
			200 x	*200*	*100*	*203.0*	*212.0*	*213.0*	*8.0*	*3.0*

Note: Tee-Lets are manufactured to fit size-on-size, that is the contoured shape on a given Tee-Let is made to fit perfectly on the first listed header size. If installed on the second header size marked on the fitting, a slight gap of approximately 1/32" will appear along the longitudinal centerline of the header. For example, a 1" x 2 - 2½" Tee-Let, is a 1" outlet fitting manufactured to fit perfectly on the 2" header size listed, while leaving a 1/32" gap along the longitudinal centerline of the 2½" size. If a perfect fit is required for a 2½" header pipe, then a 1" x 2½ - 3" Tee-Let would be ordered. Size consolidations are employed to reduce inventory and provide for greater flexibility.

Weld-Miser™ Tee-Let® Installation

Welding Outlet Fittings

Threading Practice

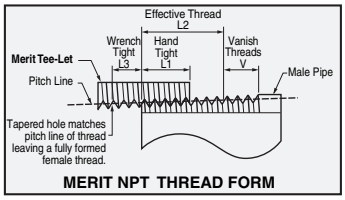

MERIT NPT THREAD FORM

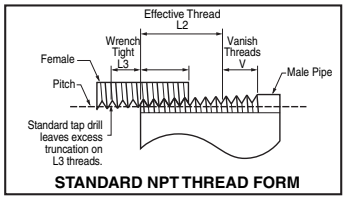

STANDARD NPT THREAD FORM

NPT Tapered Pipe Threads								
Drop Nipple or Tee-Let Outlet Size	L1 Hand Tight		L3 Wrench Tight		Total L1 - L3 Length		L2 Effective Threads	
In.(mm)	*In.(mm)*	*Threads*	*In.(mm)*	*Threads*	*In.(mm)*	*Threads*	*In.(mm)*	*Threads*
½" *15*	0.320 *8.1*	4.48	0.214 *5.4*	3.00	0.534 *13.6*	7.48	0.534 *13.6*	7.47
¾" *20*	0.339 *8.6*	4.75	0.214 *5.4*	3.00	0.553 *14.0*	7.75	0.546 *13.9*	7.64
1" *25*	0.400 *10.2*	4.60	0.261 *6.6*	3.00	0.661 *16.8*	7.60	0.683 *17.3*	7.85
1¼" *32*	0.420 *10.7*	4.83	0.261 *6.6*	3.00	0.681 *17.3*	7.83	0.707 *18.0*	8.13
1½" *40*	0.420 *10.7*	4.83	0.261 *6.6*	3.00	0.697 *17.7*	7.83	0.724 *18.4*	8.32
2" *50*	0.436 *11.1*	5.01	0.261 *6.6*	3.00	0.706 *17.9*	8.01	0.757 *19.2*	8.70
2½" *65*	0.682 *17.3*	5.46	0.250 *6.4*	2.00	0.932 *23.7*	7.46	1.138 *28.9*	9.10
3 *80*	0.766 *19.5*	6.13	0.250 *6.4*	2.00	1.016 *25.8*	8.13	1.200 *30.5*	9.60
4 *100*	0.844 *21.4*	6.75	0.250 *6.4*	2.00	1.094 *27.8*	8.75	1.300 *33.0*	10.40

Tee-Let® thread form is consistent with Aeronautical National Form (ANPT) AS71051. The thread is fully formed over both the L-1 hand tight and L-3 wrench tight threads. NPT tapered threads are typically gauged only over the L-1 threads. This makes Tee-Lets more forgiving of field cut threaded pipe that may only marginally conform to the specification. Fewer leaks translate into lower costs.

Domestic Manufacture

Increasingly, federal, state, municipal, and quasi municipal authorities require domestic content for fire sprinkler systems. Merit® Tee-Lets® meet these requirements. The need to maintain dual inventories; one domestic; one import is eliminated.

Ease of Installation

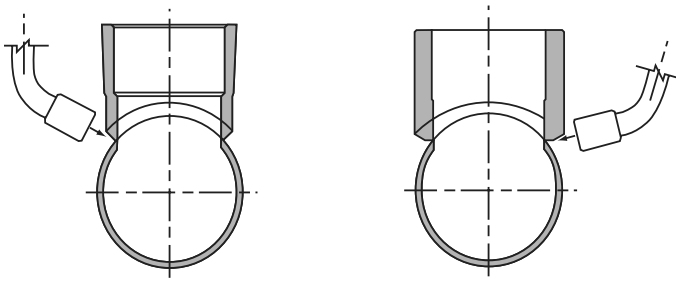

Merit Manufacturing Tee-Lets are designed to sit higher on the pipe, thereby requiring less weld and eliminating burn through. Tee-Lets sit higher on the header or branch line pipe than competitive fittings. This allows the welding torch to remain in an optimum position for welding. In addition, 1½" and larger Type A female threaded and Type C grooved Tee-Lets require the same hole size for installation. This results in fewer change overs when installed using automatic welders.

Welding Practice

When measured with respect to linear inches of weld required for installation, Tee-Lets require up to 15% less weld than competitive fittings. This reduces time and savings over time are substantial. The diameter of the contoured end of Type A Tee-Lets has been reduced so that the wall thickness more nearly matches the header or branch line pipe wall thickness. Therefore, current and voltage settings required for welding are set to provide for adequate penetration without burn through and cold shutting. Also, weld volume required for installation is lower for Tee-Lets than most other fittings. Typically, Tee-Lets require one-weld pass for attachment.

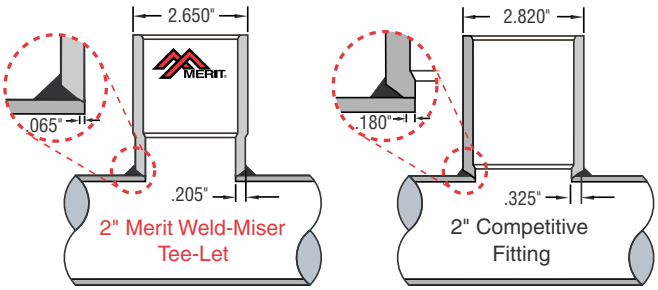

Welding Practice								
Outlet Size	MERIT WELD-MISER TEE-LET				COMPETITIVE FITTING			
	WELD VOLUME*		LINEAR WELDING		WELD VOLUME*		LINEAR WELDING	
In. (mm)	*Cross Sec. Area*	*%less*	*In.(mm)*	*%less*	*Cross Sec. Area*	*%more*	*In.(mm)*	*%less*
1" *25*	0.051 sq. in. *32.9 sq mm*	12%	2.48 *62.9*	0%	0.058 sq. in. *37.4 sq mm*	12%	2.48 *62.9*	0%
1¼" *32*	0.032" *20.6*	48%	2.88 *73.1*	4%	0.063 *40.6*	48%	3.01 *76.4*	4%
1½" *40*	0.036" *23.2*	40%	3.12 *79.2*	10%	0.060 *38.7*	40%	3.46 *87.8*	10%
2" *50*	0.040" *25.8*	62%	3.77 *95.7*	15%	0.106 *68.3*	62%	4.41 *112.0*	15%

Weld-Miser™ Tee-Let®
Installation (cont.)

Welding Outlet Fittings

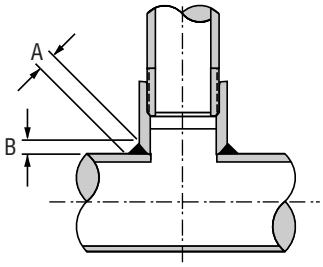

½, ¾ & 1 Outlet

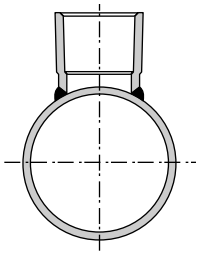

1¼ - 2½ Outlet

Recommended Amount of weld		
Outlet Size	A	B
In./mm	*In./mm*	*In./mm*
½	¼	3/16
13	*7*	*5*
¾	¼	3/16
19	*7*	*5*
1	¼	3/16
25	*7*	*5*
1¼	¼	3/16
31	*7*	*5*
1½	5/16	¼
38	*8*	*7*
2	5/16	¼
50	*8*	*7*
2½	5/16	¼
63	*8*	*7*
3	⅜	5/16
75	*10*	*5*
4	⅜	5/16
100	*10*	*5*

Recommended Installation Procedures

Merit Weld-Miser Tee-Let Welding Outlet Fittings are designed and manufactured to reduce the cost of installation from both the standpoint of labor required and energy consumed. In addition, by following the recommended installation procedures, many of the problems associated with installing welding outlet fittings on standard weight or light weight pipe are eliminated, including burn through and excessive shrinkage resulting in pipe distortion.

Recommended Hole Sizes

The hole cut in the branch or header pipe can be cut prior or subsequent to attachment of the Tee-Let. One advantage of cutting the hole after welding is that the pipe is left intact during welding thereby reducing shrinkage and possible distortion. If holes are cut prior to welding, as some codes require, then the following hole sizes are recommended. Note that the same hole diameter for a given outlet size is required for both Type A and Type C Tee-Lets 1-1½" larger.

Recommended Welding Procedures

Merit Weld-Wiser Tee-Lets are designed to be installed on standard weight or light weight pipe with one weld pass on Type A outlet sizes from ½" through 2½" inclusive, and on Type C outlet sizes through 4". Moreover, the wall thickness at the weld end of the fitting approximately matches standard weight pipe. Accordingly, heat setting can be made to optimize penetration on both the fitting and the pipe which it is being welded. Aside from reducing the likelihood of burn through and distortion resulting from excessive heat, the amount of weld required for adequate penetration is significantly reduced.

Merit Tee-Lets are manufactured from continuous cast aluminum killed steel with a carbon range of from 0.05 to 0.25. Merit specifies that residuals, such as chrome, nickel and other metals resident in the scrap used for production of the steel be reported and kept to a minimum. On the other hand, certain grades of carbon steel pipe are manufactured from skelp whose chemical composition is not specified. When the metal inert gas shield (MIG) welding process is employed, certain residuals may cause excessive porosity, spatter or lack of penetration. Specifically, gases released during the welding process do not escape before the molten puddle sets up. When porosity or lack of penetration occurs, one approach is to slightly increase the heat in order to give the gases time to escape from the puddle. A flux cored wire can also be used. This wire contains scavengers which allow gases in the molten weld puddle to escape before the weld solidifies.The following recommended settings for welding therefore may need to be adjusted slightly higher if any of the above mentioned adverse conditions exist.

As a general rule, the weld should be only as hot as required to allow the weld to penetrate the materials being welded while concomitantly allowing gases developed in the welding process to escape. Every effort must be made to avoid welding too hot or overheating both the pipe and the Tee-Let. **Excessive heat may cause the wrench tight threads (those in the bottom of the Tee-Let near the weld zone) to distort while also causing the branch pipe to bend.** It should be noted that Merit Tee-Lets have been subjected to exhaustive testing and evaluation, and only negligibly distort when subjected to excessive heat. The threads, on the other hand, may not return to their gauged form after cooling if excessive heat causes them to expand. The following is intended only as a guide, and assumes that the welding equipment is properly calibrated and functioning normally and the operator is qualified.

Recommended Tee-Let Hole Sizes		
Tee-Let Size	Type	Recommended Hole Size
In./mm		*In./mm*
½	Type A	⅝
13		*16*
¾	Type A	⅞
19		*22*
1	Type A	1⅛
25		*28*
1¼	Type A	1½
31		*38*
1¼	Type C	1⅜
31		*35*
1½	Type A or C	1⅝
38		*41*
2	Type A or C	2
50		*50*
2½	Type A or C	2 7/16
63		*61*
3	Type A or C	3
75		*75*
4	Type A or C	4
100		*100*

Holes may be cut employing mechanical means—including hole sawing, mechanical flame cutting (oxy-acetylene or propane), and air plasma cutting (constricted tungsten arc) machines. Merit offers a simple approach to cutting the hole. Hand-held templates are sized to match your plasma cutter.

Weld-Miser™ Tee-Let® Installation (cont.)

Welding Outlet Fittings

Recommended Settings For Microwire Welding Process, continued on next page

Header Size	Pipe Wall Thickness	Tee-Let Types A, B, C	Electrode Size	Welding Current	Arc. Volts	Wire Feed	Travel Speed
In./mm	*In./mm*	*In./mm*		*AMPS-DC*	*POS.*	*IPM*	*IPM*
1¼ - 2 *31-50*	0.065 *2*	½ - 2 *13-50*	0.035	100-130	16-20	210	25-30
		2½ - 4 *63-100*	0.035	115-150	17-21	270	20-25
	0.109 *3*	½ - 2 *13-50*	0.035	110-140	18-22	220	25-30
		2½ - 4 *63-100*	0.035	120-160	19-22	290	20-25
2½ - 4 *63-100*	0.083 *2.5*	½ - 2 *13-50*	0.035	110-140	17-20	210	20-25
		2½ - 4 *63-100*	0.035	120-150	17-20	270	20-25
	0.120 *3*	½ - 2 *13-50*	0.035	120-160	19-22	290	20-25
		2½ - 4 *63-100*	0.035	130-160	19-22	240	20-25
5-6 *125-150*	0.109 *3*	½ - 2 *13-50*	0.035	120-150	17-20	210	20-25
		2½ - 4 *63-100*	0.035	130-150	18-20	270	15-20
	0.134 *3.5*	½ - 2 *13-50*	0.035	130-160	19-22	290	20-25
		2½ - 4 *63-100*	0.035	140-160	20-22	270	15-20
		2½ - 4 *63-100*	0.045	180-205	20-24	245	27-32
8 *200*	0.109 *3*	½ - 2 *13-50*	0.035	120-150	17-20	240	20-25
		2½ - 4 *63-100*	0.035	130-150	18-20	260	15-20
		2½ - 4 *63-100*	0.045	170-220	18-22	290	12-18
	0.148 *3.5*	½ - 2 *13-50*	0.035	130-160	19-22	240	20-25
		2½ - 4 *63-100*	0.035	140-160	20-22	260	15-20
		2½ - 4 *63-100*	0.045	180-225	20-24	290	12-18

Shielding Gas Flow (for all sizes) **20-25 CFH**

1.) Co_2 - Deeper penetration, faster welding, low cost.

2.) 25% - Argon, 75% - Co_2, Recommended for .134 wall and lighter, high welding speeds without melt through, minimum distortion and spatter, good penetration.

Merit assumes no liability for any consequential damages resulting from the improper use of its Tee-Let Welding Outlet Fittings, nor for any recommendations made with respect to installation procedures.

90° ELBOW

AnvilStar™
Fire Products Division of Anvil® International

SPF/ANVIL

Ductile Iron

Submittal Sheet

90° ELBOW						
Nominal Size	Anvil Item Number	Universal Number	Max. Working Pressure	Dimensions- In.(mm)		Approx. Wt. Each
				A	B	
In. (mm)			*PSI (kPa)*	*In. (mm)*	*In. (mm)*	*Lbs. (kg)*
1 *20*	840000004	DB90033	500 *3450*	1.50 *38.10*	1.50 *38.10*	0.62 *0.28*
1¼ *32*	840000012	DB90044	500 *3450*	1.75 *44.45*	1.75 *44.45*	0.90 *0.41*
1½ *40*	840000020	DB90055	500 *3450*	1.94 *49.276*	1.94 *49.276*	1.20 *0.54*
2 *50*	840000038	DB90066	500 *3450*	2.25 *57.15*	2.25 *57.15*	1.85 *0.84*

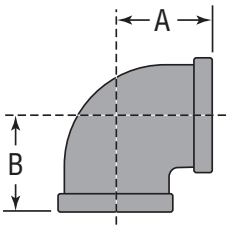

MATERIAL SPECIFICATIONS

Ductile iron threaded fittings are UL & ULC Listed & Factory Mutual Approved for 500 psi service.
Ductile iron per ASTM A536 Class 65-45-12.
Dimensions conform to ASME B16.3 Class 150.
Threads are NPT per ANSI/ASME B1.20.1.

UL FM ULC
APPROVED
For Listing / Approval details contact your AnvilStar™ Representative.

NOTICE: Ductile iron fittings have higher tensile strength than that of steel pipe. Therefore, over tightening can cause damage to pipe threads which may cause leakage. Ductile iron fittings should be tightened three turns beyond hand tight, but no more than four turns.

PROJECT INFORMATION:		APPROVAL STAMP:
Project:		
Date:	**Phone:**	
Architect / Engineer:		
Contractor:		
Address:		
Notes 1:		
Notes 2:		

For the latest UL/ULC Listed and FM Approved pressure ratings, versus pipe schedule, go to **www.anvilstar.com** or contact your local AnvilStar representative

ANVIL INTERNATIONAL, INC.

45° ELBOW

AnvilStar™
Fire Products Division of Anvil® International

SPF/ANVIL

Ductile Iron

Submittal Sheet

45° ELBOW						
Nominal Size	Anvil Item Number	Universal Number	Max. Working Pressure	Dimensions-		Approx. Wt. Each
				A	B	
In. (mm)			*PSI (kPa)*	*In. (mm)*	*In. (mm)*	*Lbs. (kg)*
1 *25*	840002133	DB45033	500 *3450*	1.12 *28.44*	1.12 *28.44*	0.46 *0.21*
1¼ *32*	840002141	DB45044	500 *3450*	1.29 *32.76*	1.29 *32.76*	0.73 *0.33*
1½ *40*	840002158	DB45055	500 *3450*	1.43 *36.32*	1.43 *36.32*	0.92 *0.42*
2 *50*	840002166	DB45066	500 *3450*	1.68 *42.67*	1.68 *42.67*	1.50 *0.68*

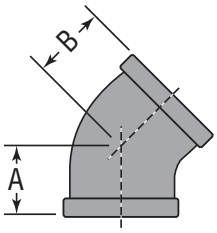

MATERIAL SPECIFICATIONS

Ductile iron threaded fittings are UL & ULC Listed & Factory Mutual Approved for 500 psi service.
Ductile iron per ASTM A536 Class 65-45-12.
Dimensions conform to ASME B16.3 Class 150.
Threads are NPT per ANSI/ASME B1.20.1.

UL FM ULC
APPROVED
For Listing / Approval details contact your AnvilStar™ Representative.

NOTICE: Ductile iron fittings have higher tensile strength than that of steel pipe. Therefore, over tightening can cause damage to pipe threads which may cause leakage. Ductile iron fittings should be tightened three turns beyond hand tight, but no more than four turns.

PROJECT INFORMATION:		APPROVAL STAMP:
Project:		
Date:	**Phone:**	
Architect / Engineer:		
Contractor:		
Address:		
Notes 1:		
Notes 2:		

For the latest UL/ULC Listed and FM Approved pressure ratings, versus pipe schedule, go to **www.anvilstar.com** or contact your local AnvilStar representative

ANVIL INTERNATIONAL, INC.

REDUCING 90° ELBOW

AnvilStar™
Fire Products Division of Anvil® International

SPF/ANVIL

Ductile Iron

Submittal Sheet

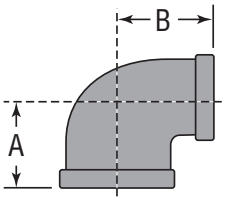

REDUCING 90° ELBOW

Nominal Size	Anvil Item Number	Universal Number	Max. Working Pressure	Dimensions		Approx. Wt. Each
				A	B	
In. (mm)			*PSI (kPa)*	*In. (mm)*	*In. (mm)*	*Lbs. (kg)*
1 x ½	840001036	DB90031	500	1.26	1.36	0.44
25 x 15			*3450*	*32.00*	*34.54*	*0.20*
1 x ¾	840001044	DB90032	500	1.37	1.45	0.52
25 x 20			*3450*	*34.79*	*36.83*	*0.24*
1¼ x ½	840001051	DB90041	500	1.34	1.53	0.64
32 x 15			*34550*	*34.03*	*38.86*	*0.29*
1¼ x ¾	840001069	DB90042	500	1.45	1.62	0.72
32 x 20			*3450*	*36.83*	*41.14*	*0.33*
1¼ x 1	840001077	DB90043	500	1.58	1.67	0.75
32 x 25			*3450*	*40.13*	*42.41*	*0.34*
1½ x 1	840001085	DB90053	500	1.65	1.80	0.92
40 x 25			*3450*	*41.91*	*45.72*	*0.42*
1½ x 1¼	840001093	DB90054	500	1.82	1.88	1.08
40 x 32			*3450*	*46.22*	*47.75*	*0.49*
2 x ½	840001101	DB90061	500	1.49	1.88	1.08
50 x 15			*3450*	*37.84*	*47.75*	*0.49*
2 x ¾	840001119	DB90062	500	1.60	1.97	1.24
50 x 20			*3450*	*40.64*	*50.03*	*0.56*
2 x 1	840001127	DB90063	500	1.73	2.02	1.40
50 x 25			*3450*	*43.94*	*51.30*	*0.64*
2 x 1¼	840001135	DB90064	500	1.90	2.10	1.52
50 x 32			*3450*	*48.26*	*53.34*	*0.70*
2 x 1½	840001143	DB90065	500	2.02	2.16	1.65
50 x 40			*3450*	*51.30*	*54.86*	*0.75*

MATERIAL SPECIFICATIONS

Ductile iron threaded fittings are UL & ULC Listed & Factory Mutual Approved for 500 psi service.
Ductile iron per ASTM A536 Class 65-45-12.
Dimensions conform to ASME B16.3 Class 150.
Threads are NPT per ANSI/ASME B1.20.1.

UL FM ULC
APPROVED
For Listing / Approval details contact your AnvilStar™ Representative.

NOTICE: Ductile iron fittings have higher tensile strength than that of steel pipe. Therefore, over tightening can cause damage to pipe threads which may cause leakage. Ductile iron fittings should be tightened three turns beyond hand tight, but no more than four turns.

PROJECT INFORMATION:		APPROVAL STAMP:
Project:		
Date:	**Phone:**	
Architect / Engineer:		
Contractor:		
Address:		
Notes 1:		
Notes 2:		

For the latest UL/ULC Listed and FM Approved pressure ratings, versus pipe schedule, go to **www.anvilstar.com** or contact your local AnvilStar representative

ANVIL INTERNATIONAL, INC.

STRAIGHT TEE

AnvilStar™
Fire Products Division of Anvil® International

SPF/ANVIL

Ductile Iron

Submittal Sheet

STRAIGHT TEE						
Nominal Size	Anvil Item Number	Universal Number	Max. Working Pressure	Dimensions		Approx. Wt. Each
				A	B	
In. (mm)			*PSI (kPa)*	*In. (mm)*	*In. (mm)*	*Lbs. (kg)*
1 *25*	840003164	DT333	500 *3450*	1.50 *38.10*	1.50 *38.10*	0.85 *0.39*
1¼ *32*	840003172	DT444	500 *3450*	1.75 *44.45*	1.75 *44.45*	1.22 *0.55*
1½ *40*	840003180	DT555	500 *3450*	1.94 *49.27*	1.94 *49.27*	1.55 *0.70*
2 *50*	840003198	DT666	500 *3450*	2.25 *57.15*	2.25 *57.15*	2.45 *1.11*

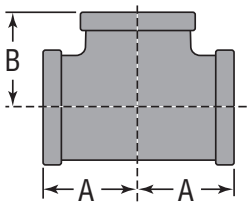

MATERIAL SPECIFICATIONS

Ductile iron threaded fittings are UL & ULC Listed & Factory Mutual Approved for 500 psi service.
Ductile iron per ASTM A536 Class 65-45-12.

Dimensions conform to ASME B16.3 Class 150.
Threads are NPT per ANSI/ASME B1.20.1.

UL FM ULC
APPROVED
For Listing / Approval details contact your AnvilStar™ Representative.

NOTICE: Ductile iron fittings have higher tensile strength than that of steel pipe. Therefore, over tightening can cause damage to pipe threads which may cause leakage. Ductile iron fittings should be tightened three turns beyond hand tight, but no more than four turns.

PROJECT INFORMATION:		APPROVAL STAMP:
Project:		
Date:	**Phone:**	
Architect / Engineer:		
Contractor:		
Address:		
Notes 1:		
Notes 2:		

For the latest UL/ULC Listed and FM Approved pressure ratings, versus pipe schedule, go to **www.anvilstar.com** or contact your local AnvilStar representative

ANVIL INTERNATIONAL, INC.

REDUCING TEE

AnvilStar™
Fire Products Division of Anvil® International

SPF/ANVIL

Ductile Iron

Submittal Sheet

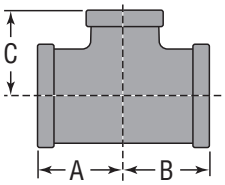

REDUCING TEE

Nominal Size	Anvil Item Number	Universal Number	Max. Working Pressure	Dimensions A	Dimensions B	Dimensions C	Approx. Wt. Each
In. (mm)			PSI (kPa)	In. (mm)	In. (mm)	In. (mm)	Lbs.(kg)
1 x ½ x 1 (25 x 15 x 25)	840004196	DT313	500 (3450)	1.50 (38.10)	1.36 (34.54)	1.50 (38.10)	0.64 (0.29)
1 x ¾ x 1 (25 x 20 x 25)	840004204	DT323	500 (3450)	1.50 (38.10)	1.45 (36.83)	1.50 (38.10)	0.73 (0.33)
1 x 1 x ½ (25 x 25 x 15)	840004212	DT331	500 (3450)	1.26 (32.00)	1.26 (32.00)	1.36 (34.54)	0.71 (0.32)
1 x 1 x ¾ (25 x 25 x 20)	840004220	DT332	500 (3450)	1.37 (34.80)	1.37 (34.80)	1.45 (36.83)	0.76 (0.34)
1 x 1 x 1¼ (25 x 25 x 32)	840004238	DT334	500 (3450)	1.67 (42.41)	1.67 (42.41)	1.58 (40.13)	0.98 (0.44)
1 x 1 x 1½ (25 x 25 x 40)	840004246	DT335	500 (3450)	1.80 (45.72)	1.80 (45.72)	1.65 (41.91)	1.16 (0.53)
1¼ x 1 x ½ (32 x 25 x 15)	840004253	DT431	500 (3450)	1.34 (34.04)	1.26 (32.00)	1.53 (38.86)	0.82 (0.37)
1¼ x 1 x ¾ (32 x 25 x 20)	840004261	DT432	500 (3450)	1.45 (36.83)	1.37 (34.80)	1.62 (41.15)	0.90 (0.41)
1¼ x 1 x 1 (32 x 25 x 25)	840004279	DT433	500 (3450)	1.58 (40.13)	1.50 (38.10)	1.67 (42.42)	1.00 (0.45)
1¼ x 1 x 1¼ (32 x 25 x 32)	840004287	DT434	500 (3450)	1.75 (44.45)	1.67 (42.42)	1.75 (44.45)	1.08 (0.49)
1¼ x 1 x 1½ (32 x 25 x 40)	840004295	DT435	500 (3450)	1.88 (47.75)	1.80 (45.72)	1.82 (46.22)	1.42 (0.64)
1¼ x 1¼ x ½ (32 x 32 x 15)	840004303	DT441	500 (3450)	1.34 (34.04)	1.34 (34.04)	1.53 (38.86)	0.86 (0.39)
1¼ x 1¼ x ¾ (32 x 32 x 20)	840004311	DT442	500 (3450)	1.45 (36.83)	1.45 (36.83)	1.62 (41.15)	0.92 (0.42)
1¼ x 1¼ x 1 (32 x 32 x 25)	840004329	DT443	500 (3450)	1.58 (40.13)	1.58 (40.13)	1.67 (42.42)	0.95 (0.43)
1¼ x 1¼ x 1½ (32 x 32 x 40)	840004337	DT445	500 (3450)	1.88 (47.75)	1.88 (47.75)	1.82 (46.22)	1.45 (0.66)
1¼ x 1¼ x 2 (32 x 32 x 50)	840004345	DT446	500 (3450)	2.10 (53.34)	2.10 (53.34)	1.90 (48.26)	1.75 (0.79)
1½ x 1 x ½ (40 x 25 x 15)	840004352	DT531	500 (3450)	1.41 (35.81)	1.34 (34.04)	1.66 (42.16)	0.95 (0.43)
1½ x 1 x ¾ (40 x 25 x 20)	840004360	DT532	500 (3450)	1.52 (38.61)	1.37 (34.80)	1.75 (44.45)	1.14 (0.52)
1½ x 1 x 1 (40 x 25 x 25)	840004378	DT533	500 (3450)	1.65 (41.91)	1.50 (38.10)	1.80 (45.72)	1.17 (0.53)
1½ x 1 x 1¼ (40 x 25 x 32)	840004386	DT534	500 (3450)	1.82 (46.23)	1.67 (42.42)	1.88 (47.75)	1.34 (0.61)
1½ x 1 x 1½ (40 x 25 x 40)	840004394	DT535	500 (3450)	1.94 (49.28)	1.80 (45.72)	1.94 (49.28)	1.45 (0.66)
1½ x1¼ x ½ (40 x 32 x 15)	840004402	DT541	500 (3450)	1.41 (35.81)	1.34 (34.04)	1.66 (42.16)	1.05 (0.48)
1½ x1¼ x ¾ (40 x 32 x 20)	840004410	DT542	500 (3450)	1.52 (38.61)	1.45 (36.83)	1.75 (44.45)	1.15 (0.52)

REDUCING TEE

Nominal Size	Anvil Item Number	Universal Number	Max. Working Pressure	Dimensions A	Dimensions B	Dimensions C	Approx. Wt. Each
In. (mm)			PSI (kPa)	In. (mm)	In. (mm)	In. (mm)	Lbs.(kg)
1½ x 1¼ x 1 (40 x 32 x 25)	840004428	DT543	500 (3450)	1.65 (41.91)	1.58 (40.13)	1.80 (45.72)	1.25 (0.57)
1½ x 1¼ x 2 (40 x 32 x 50)	840004436	DT546	500 (3450)	2.16 (54.86)	2.10 (53.34)	2.02 (51.30)	1.90 (0.86)
1½ x 1½ x ½ (40 x 40 x 15)	840004444	DT551	500 (3450)	1.41 (35.81)	1.41 (35.81)	1.16 (29.46)	1.15 (0.52)
1½ x 1½ x ¾ (40 x 40 x 20)	840004451	DT552	500 (3450)	1.52 (38.61)	1.52 (38.61)	1.75 (44.45)	1.24 (0.56)
1½ x 1½ x 1 (40 x 40 x 25)	840004469	DT553	500 (3450)	1.65 (41.91)	1.65 (41.91)	1.80 (45.72)	1.30 (0.59)
1½ x 1½ x 1¼ (40 x 40 x 32)	840004477	DT554	500 (3450)	1.82 (46.23)	1.82 (46.23)	1.88 (47.75)	1.48 (0.67)
1½ x 1½ x 2 (40 x 40 x 50)	840004485	DT556	500 (3450)	2.16 (54.86)	2.16 (54.86)	2.02 (51.30)	1.98 (0.90)
2 x 1 x 2 (50 x 25 x 50)	840004493	DT636	500 (3450)	2.25 (57.15)	2.02 (51.31)	2.25 (57.15)	2.15 (0.98)
2 x 1¼ x 2 (50 x 32 x 50)	840004501	DT646	500 (3450)	2.25 (57.15)	2.10 (53.34)	2.25 (57.15)	2.30 (1.04)
2 x 1½ x ½ (50 x 40 x 15)	840004519	DT651	500 (3450)	1.49 (37.85)	1.41 (35.81)	1.88 (47.75)	1.50 (0.68)
2 x 1½ x ¾ (50 x 40 x 20)	840004527	DT652	500 (3450)	1.60 (40.64)	1.52 (38.61)	1.97 (50.04)	1.62 (0.73)
2 x 1½ x 1 (50 x 40 x 25)	840004535	DT653	500 (3450)	1.73 (43.94)	1.65 (41.91)	2.02 (51.31)	1.64 (0.74)
2 x 1½ x 1¼ (50 x 40 x 32)	840004543	DT654	500 (3450)	1.90 (48.26)	1.82 (46.23)	2.10 (53.34)	1.80 (0.82)
2 x 1½ x 1½ (50 x 40 x 40)	840004550	DT655	500 (3450)	2.02 (51.31)	1.94 (49.28)	2.16 (54.86)	2.00 (0.91)
2 x 1½ x 2 (50 x 40 x 50)	840004568	DT656	500 (3450)	2.25 (57.15)	2.16 (54.86)	2.25 (57.15)	2.35 (1.07)
2 x 2 x ½ (50 x 50 x 15)	840004576	DT661	500 (3450)	1.49 (37.85)	1.49 (37.85)	1.88 (47.75)	1.60 (0.73)
2 x 2 x ¾ (50 x 50 x 20)	840004584	DT662	500 (3450)	1.60 (40.64)	1.60 (40.64)	1.97 (50.04)	1.68 (0.76)
2 x 2 x 1 (50 x 50 x 25)	840004592	DT663	500 (3450)	1.73 (43.94)	1.73 (43.94)	2.02 (51.31)	1.85 (0.84)
2 x 2 x 1¼ (50 x 50 x 32)	840004600	DT664	500 (3450)	1.90 (44.45)	1.90 (42.42)	2.10 (44.45)	2.04 (0.93)
2 x 2 x 1½ (50 x 50 x 40)	840004618	DT665	500 (3450)	2.02 (44.45)	2.02 (42.42)	2.16 (44.45)	2.18 (0.99)
2 x 2 x 2½ (50 x 50 x 65)	-	DT667	500 (3450)	2.60 (44.45)	2.60 (42.42)	2.39 (44.45)	3.61 (1.64)
2½ x 2 x ¾ (65 x 50 x 20)	-	DT762	500 (3450)	1.74 (44.45)	1.60 (42.42)	2.32 (44.45)	2.28 (1.03)

MATERIAL SPECIFICATIONS

Ductile iron threaded fittings are UL & ULC Listed & Factory Mutual Approved for 500 psi service.
Ductile iron per ASTM A536 Class 65-45-12.

Dimensions conform to ASME B16.3 Class 150.
Threads are NPT per ANSI/ASME B1.20.1.

UL ULC FM
APPROVED
For Listing / Approval details contact your AnvilStar™ Representative.

NOTICE: Ductile iron fittings have higher tensile strength than that of steel pipe. Therefore, over tightening can cause damage to pipe threads which may cause leakage. Ductile iron fittings should be tightened three turns beyond hand tight, but no more than four turns.

PROJECT INFORMATION:		APPROVAL STAMP:
Project:		
Date:	**Phone:**	
Architect / Engineer:		
Contractor:		
Address:		
Notes 1:		
Notes 2:		

For the latest UL/ULC Listed and FM Approved pressure ratings, versus pipe schedule, go to **www.anvilstar.com** or contact your local AnvilStar representative

ANVIL INTERNATIONAL, INC.

BULL HEAD TEE

AnvilStar™
Fire Products Division of Anvil® International

SPF/ANVIL

Ductile Iron

Submittal Sheet

BULL HEAD TEE							
Nominal Size	Anvil Item Number	Universal Number	Max. Working Pressure	Dimensions			Approx. Wt. Each
				A	B	C	
In. (mm)			*PSI (kPa)*	*In. (mm)*	*In. (mm)*	*In. (mm)*	*Lbs. (kg)*
1 x 1 x 1¼ *25 x 25 x 32*	840004238	DT334	500 *3450*	1.67 *42.41*	1.67 *42.41*	1.58 *40.13*	0.98 *0.44*
1 x 1 x 1½ *25 x 25 x 40*	840004246	DT335	500 *3450*	1.80 *45.72*	1.80 *45.72*	1.65 *41.91*	1.16 *0.53*
1¼ x 1 x 1½ *32 x 25 x 40*	840004295	DT435	500 *3450*	1.88 *47.75*	1.80 *45.72*	1.82 *46.22*	1.42 *0.64*
1¼ x 1¼ x 1½ *32 x 32 x 40*	840004337	DT445	500 *3450*	1.88 *47.75*	1.88 *47.75*	1.82 *46.22*	1.45 *0.66*
1¼ x 1¼ x 2 *32 x 32 x 50*	840004345	DT446	500 *3450*	2.10 *53.34*	2.10 *53.34*	1.90 *48.26*	1.75 *0.79*
1½ x 1¼ x 2 *40 x 32 x 50*	840004436	DT546	500 *3450*	2.16 *54.86*	2.10 *53.34*	2.02 *51.30*	1.90 *0.86*
1½ x 1½ x 2 *40 x 40 x 50*	840004485	DT556	500 *3450*	2.16 *54.86*	2.16 *54.86*	2.02 *51.30*	1.98 *0.90*

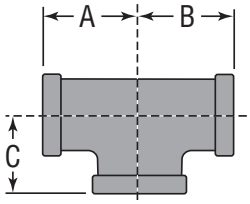

MATERIAL SPECIFICATIONS

Ductile iron threaded fittings are UL & ULC Listed & Factory Mutual Approved for 500 psi service.
Ductile iron per ASTM A536 Class 65-45-12.
Dimensions conform to ASME B16.3 Class 150.
Threads are NPT per ANSI/ASME B1.20.1.

APPROVED
For Listing / Approval details contact your AnvilStar™ Representative.

NOTICE: Ductile iron fittings have higher tensile strength than that of steel pipe. Therefore, over tightening can cause damage to pipe threads which may cause leakage. Ductile iron fittings should be tightened three turns beyond hand tight, but no more than four turns.

PROJECT INFORMATION:		APPROVAL STAMP:
Project:		
Date:	**Phone:**	
Architect / Engineer:		
Contractor:		
Address:		
Notes 1:		
Notes 2:		

For the latest UL/ULC Listed and FM Approved pressure ratings, versus pipe schedule, go to **www.anvilstar.com** or contact your local AnvilStar representative

ANVIL INTERNATIONAL, INC.

CROSS

AnvilStar™
Fire Products Division of Anvil® International

SPF/ANVIL

Ductile Iron

Submittal Sheet

CROSS						
Nominal Size	Anvil Item Number	Universal Number	Max. Working Pressure	Dimensions		Approx. Wt. Each
				A	B	
In. (mm)	*In. (mm)*	*PSI (kPa)*	*PSI (kPa)*	*In. (mm)*	*In. (mm)*	*Lbs. (kg)*
1 *25*	840006647	DX033	500 *3450*	1.50 *38.10*	1.50 *38.10*	0.98 *0.44*
1¼ *32*	840006654	DX044	500 *3450*	1.75 *44.45*	1.75 *44.45*	1.50 *0.68*
1½ *40*	840006662	DX055	500 *3450*	1.94 *49.27*	1.94 *49.27*	1.90 *0.86*
2 *50*	840006670	DX066	500 *3450*	2.25 *57.15*	2.25 *57.15*	2.95 *1.34*
1¼ x 1 *32 x 25*	840007678	DX043	500 *3450*	1.58 *40.13*	1.67 *42.41*	1.27 *0.58*
1½ x 1 *40 x 25*	840007686	DX053	500 *3450*	1.65 *41.91*	1.80 *45.72*	1.48 *0.67*
2 x 1 *50 x 25*	840007694	DX063	500 *3450*	1.73 *43.94*	2.02 *51.30*	2.10 *0.95*

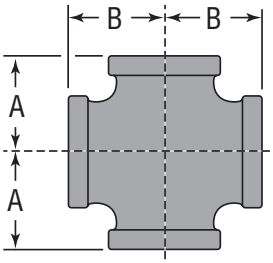

MATERIAL SPECIFICATIONS

Ductile iron threaded fittings are UL & ULC Listed & Factory Mutual Approved for 500 psi service.
Ductile iron per ASTM A536 Class 65-45-12.
Dimensions conform to ASME B16.3 Class 150.
Threads are NPT per ANSI/ASME B1.20.1.

APPROVED
For Listing / Approval details contact your AnvilStar™ Representative.

NOTICE: Ductile iron fittings have higher tensile strength than that of steel pipe. Therefore, over tightening can cause damage to pipe threads which may cause leakage. Ductile iron fittings should be tightened three turns beyond hand tight, but no more than four turns.

PROJECT INFORMATION:		APPROVAL STAMP:
Project:		
Date:	**Phone:**	
Architect / Engineer:		
Contractor:		
Address:		
Notes 1:		
Notes 2:		

For the latest UL/ULC Listed and FM Approved pressure ratings, versus pipe schedule, go to **www.anvilstar.com** or contact your local AnvilStar representative

ANVIL INTERNATIONAL, INC.

BUSHINGS

AnvilStar™
Fire Products Division of Anvil® International

SPF/ANVIL

Ductile Iron

Submittal Sheet

BUSHINGS							
Nominal Size	Anvil Item Number	Universal Number	Dimensions			Style	Approx. Wt. Each
			A	B	C		
In. (mm)			*In. (mm)*	*In. (mm)*	*In. (mm)*		*Lbs. (kg)*
1 x ½ *25 x 15*	840600001	DBUSH31	0.75 *19.05*	0.25 *6.35*	1.42 *36.06*	Outside	0.22 *0.10*
1 x ¾ *25 x 20*	840600019	DBUSH32	0.75 *19.05*	0.25 *6.35*	1.42 *36.06*	Outside	0.17 *0.08*
1¼ x 1 *32 x 25*	840600027	DBUSH43	0.80 *20.32*	0.28 *7.11*	1.76 *44.70*	Outside	0.28 *0.13*
1½ x 1 *40 x 25*	840600035	DBUSH53	0.83 *21.08*	0.31 *7.874*	2.00 *50.80*	Outside	0.45 *0.20*
1½ x 1¼ *40 x 32*	840600043	DBUSH54	0.83 *21.08*	0.31 *7.874*	2.00 *50.80*	Outside	0.30 *0.14*
2 x 1 *50 x 25*	840600050	DBUSH63	0.88 *22.35*	0.41 *10.414*	1.95 *49.53*	Inside	0.67 *0.30*
2 x 1¼ *50 x 32*	840600068	DBUSH64	0.88 *22.35*	0.34 *8.636*	2.48 *62.99*	Outside	0.73 *0.33*
2 x 1½ *50 x 40*	840600076	DBUSH65	0.88 *22.35*	0.34 *8.636*	2.48 *62.99*	Outside	0.61 *0.28*

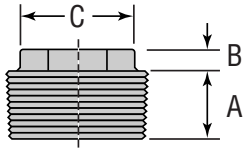

Inside Head

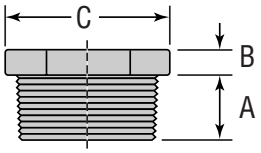

Outside Head

MATERIAL SPECIFICATIONS

Ductile iron threaded fittings are UL & ULC Listed & Factory Mutual Approved for 500 psi service.
Ductile iron per ASTM A536 Class 65-45-12.

Dimensions conform to ASME B16.3 Class 150.
Threads are NPT per ANSI/ASME B1.20.1.

APPROVED
For Listing / Approval details contact your AnvilStar™ Representative.

NOTICE: Ductile iron fittings have higher tensile strength than that of steel pipe. Therefore, over tightening can cause damage to pipe threads which may cause leakage. Ductile iron fittings should be tightened three turns beyond hand tight, but no more than four turns.

PROJECT INFORMATION:		APPROVAL STAMP:
Project:		
Date:	**Phone:**	
Architect / Engineer:		
Contractor:		
Address:		
Notes 1:		
Notes 2:		

For the latest UL/ULC Listed and FM Approved pressure ratings, versus pipe schedule, go to **www.anvilstar.com** or contact your local AnvilStar representative

ANVIL INTERNATIONAL, INC.

CAP

AnvilStar™
Fire Products Division of Anvil® International

SPF/ANVIL

Ductile Iron

Submittal Sheet

CAPS					
Nominal Size	Anvil Item Number	Universal Number	Max. Working Pressure	Dimensions A	Approx. Wt. Each
In. (mm)			*PSI (kPa)*	*In. (mm)*	*Lbs. (kg)*
1 *25*	840005615	DCP003	500 *3450*	1.16 *29.46*	0.32 *0.15*
1¼ *32*	840005623	DCP004	500 *3450*	1.28 *32.51*	0.43 *0.20*
1½ *40*	840005631	DCP005	500 *3450*	1.33 *33.78*	0.60 *0.27*
2 *50*	840005649	DCP006	500 *3450*	1.45 *36.83*	0.91 *0.41*

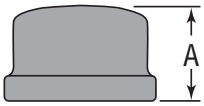

MATERIAL SPECIFICATIONS

Ductile iron threaded fittings are UL & ULC Listed & Factory Mutual Approved for 500 psi service.
Ductile iron per ASTM A536 Class 65-45-12.
Dimensions conform to ASME B16.3 Class 150.
Threads are NPT per ANSI/ASME B1.20.1.

APPROVED
For Listing / Approval details contact your AnvilStar™ Representative.

NOTICE: Ductile iron fittings have higher tensile strength than that of steel pipe. Therefore, over tightening can cause damage to pipe threads which may cause leakage. Ductile iron fittings should be tightened three turns beyond hand tight, but no more than four turns.

PROJECT INFORMATION:		APPROVAL STAMP:
Project:		
Date:	**Phone:**	
Architect / Engineer:		
Contractor:		
Address:		
Notes 1:		
Notes 2:		

For the latest UL/ULC Listed and FM Approved pressure ratings, versus pipe schedule, go to **www.anvilstar.com** or contact your local AnvilStar representative

ANVIL INTERNATIONAL, INC.

COUPLING

AnvilStar™
Fire Products Division of Anvil® International

SPF/ANVIL

Ductile Iron

Submittal Sheet

COUPLING				
Nominal Size	Anvil Item Number	Universal Number	Dimensions A	Approx. Wt. Each
In. (mm)			*In. (mm)*	*Lbs. (kg)*
1 *25*	840008692	DCL033	1.67 *42.42*	0.40 *0.18*
1¼ *32*	840008700	DCL044	1.93 *49.02*	0.57 *0.26*
1½ *40*	840008718	DCL055	2.15 *54.61*	0.75 *0.34*
2 *50*	840008726	DCL066	2.53 *64.26*	1.15 *0.52*

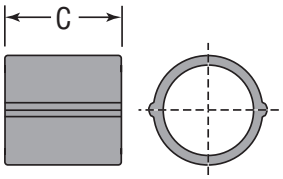

MATERIAL SPECIFICATIONS

Ductile iron threaded fittings are UL & ULC Listed & Factory Mutual Approved for 500 psi service.
Ductile iron per ASTM A536 Class 65-45-12.
Dimensions conform to ASME B16.3 Class 150.
Threads are NPT per ANSI/ASME B1.20.1.

APPROVED
For Listing / Approval details contact your AnvilStar™ Representative.

NOTICE: Ductile iron fittings have higher tensile strength than that of steel pipe. Therefore, over tightening can cause damage to pipe threads which may cause leakage. Ductile iron fittings should be tightened three turns beyond hand tight, but no more than four turns.

PROJECT INFORMATION:		APPROVAL STAMP:
Project:		
Date:	**Phone:**	
Architect / Engineer:		
Contractor:		
Address:		
Notes 1:		
Notes 2:		

For the latest UL/ULC Listed and FM Approved pressure ratings, versus pipe schedule, go to **www.anvilstar.com** or contact your local AnvilStar representative

ANVIL INTERNATIONAL, INC.

SAMMYS® FOR STEEL - Vertical Application

Application

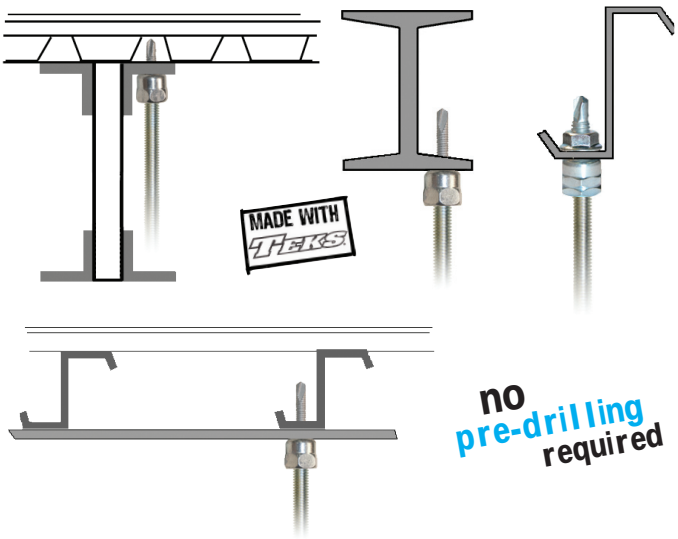

Product Features

- Made with Teks® self-drilling fasteners - no pre-drilling required.
- Installs into steel range from 20 gauge – 1/2" thicknesses.
- Saves time from traditional methods.
- Reduces installation costs.
- Quick to install using the Sammys Nut Driver with an 18V cordless drill/driver.
- A standard screwgun with a depth sensitive nosepiece should be used to install Teks. For optimal fastener performance, the screwgun should be a minimum of 6 amps and have an RPM range of 0-2500.
- Made in the U.S.A.

Watch a video demonstration at www.itwbuildex.com

#14 Black Nut Driver Part # 8113910

#14 SW Red Nut Driver Part # 8114910

Approvals	Rod Size	Part Number	Model	Screw Descriptions	Ultimate Pullout (lbs)	UL Test Load (lbs)	FM Test Load (lbs)	Min Thick	Max Thick	Box Qty	Case Qty
VERTICAL MOUNT											
	1/4"	8024957	DSTR 100 *	1/4-20 x 1" TEKS 3	1510 (20 ga.)			.036"-20 ga	3/16"	25	125
	1/4"	8025957	DST 100	1/4-14 x 1" TEKS 3	446 (20 ga.)			.036"-20 ga	3/16"	25	125
	1/4"	8026957	DST 150	1/4-14 x 1-1/2" TEKS 3	970 (16 ga.)			.036"-20 ga	3/16"	25	125
	1/4"	8027957	DST 200	1/4-14 x 2" TEKS 3	446 (20 ga.)			.036"-20 ga	3/16"	25	125
	1/4"	8030957	TEK 500	12-24 x 1-1/2" TEKS 5	3125 (3/16")			.188"-3/16"	1/2"	25	125
UL FM	3/8"	8038957	DSTR 1 *	1/4-20 x 1" TEKS 3	1510 (20 ga.)	1500	1475	.036"-20 ga	3/16"	25	125
UL FM	3/8"	8037957	DSTR 1-1/2 *	12-24 x 1-1/2" TEKS 5	1510 (3/16")	1500	1475	.060"-16 ga.	1/2"	25	125
UL FM	3/8"	8039957	DSTR 516 *	5/16-18 x 1-1/4" TEKS 3	2200 (20 ga.)	1500	1475	.036"-20 ga	3/16"	25	125
	3/8"	8040957	DST 10	1/4-14 x 1" TEKS 3	446 (20 ga.) 970 (16 ga.)			.036"-20 ga	3/16"	25	125
	3/8"	8077925	DST 10-SS	1/4-14 x 1" TEKS 3	446 (20 ga.) 970 (16 ga.)			.036"-20 ga	3/16"	25	125
	3/8"	8041957	DST 15	1/4-14 x 1-1/2" TEKS 3	446 (20 ga.) 970 (16 ga.)			.036"-20 ga	3/16"	25	125
	3/8"	8078925	DST 15-SS	1/4-14 x 1-1/2" TEKS 3	446 (20 ga.) 970 (16 ga.)			.036"-20 ga	3/16"	25	125
	3/8"	8042957	DST 20	1/4-14 x 2" TEKS 3	446 (20 ga.) 970 (16 ga.)			.036"-20 ga	3/16"	25	125
	3/8"	8043957	DST 25	1/4-14 x 2-1/2" TEKS 3	446 (20 ga.) 970 (16 ga.)			.036"-20 ga	3/16"	25	125
	3/8"	8044957	DST 30	1/4-14 x 3" TEKS 3	446 (20 ga.) 970 (16 ga.)			.036"-20 ga	3/16"	25	125
UL FM	3/8"	8045957	DST 516	5/16-18 x 1-1/4" TEKS 3	1500 (3/16")	1500	1475	.125"-1/8"	3/16"	25	125
UL FM	3/8"	8046957	TEK 50	12-24 x 1-1/2" TEKS 5	3125 (3/16")	1500	1475	.250"-1/4"	1/2"	25	125
	1/2"	8031925	DST 2.0	1/4-14 x 2" TEKS 3	446 (20 ga.) 970 (16 ga.)			.188"-3/16"	1/4"	25	125
	1/2"	8033925	DSTR 1.0 *	1/4-20 x 1" TEKS 3	1510 (20 ga.)			.036"-20 ga	3/16"	25	125
	1/2"	8034925	DSTR 5.16 *	5/16-18 x 1-1/4" TEKS 3	2220 (20 ga.)			.036"-20 ga	3/16"	25	125
	1/2"	8035925	DST 5.16	5/16-18 x 1-1/4" TEKS 3	1500 (3/16")			.125"-1/8"	3/16"	25	125
	1/2"	8036925	TEK 5.0	12-24 x 1-1/2" TEKS 5	3125 (3/16")			.188"-3/16"	1/2"	25	125

*Includes retaining nut

MADE IN U.S.A

SPECIAL NUT DRIVER SYSTEM: The nut drivers were designed with a unique spin-off feature which provides a fast and safe installation each time. When the face of the driver comes into contact with the material you are installing into, continue drilling until nut driver spins free. Installation is then complete. Warranty requires the use of the appropriate nut driver for installations.

SIDEWINDER® FOR STEEL - Horizontal Application

Application

Product Features

- Made with Teks® self-drilling fasteners - no pre-drilling required.
- Installs into steel range from 20 gauge – 1/2" thicknesses.
- A standard screwgun with a depth sensitive nosepiece should be used to install Teks. For optimal fastener performance, the screwgun should be a minimum of 6 amps and have an RPM range of 0-2500.
- Saves time from traditional methods.
- Reduces installation costs.
- Quick to install using the Sammys Nut Driver with an 18V cordless drill/driver.
- Made in the U.S.A.

Watch a video demonstration at www.itwbuildex.com

#14 SW Red Nut Driver Part # 8114910

Approvals	Rod Size	Part Number	Model	Screw Descriptions	Ultimate Pullout (lbs)	UL Test Load (lbs)	FM Test Load (lbs)	Min Thickness	Max Thickness	Box Qty	Case Qty
HORIZONTAL MOUNT											
	1/4"	8047957	SWD 100	1/4-14 x 1" TEKS 3	1477 (16 ga.)			.060"-16 ga	3/16"	25	125
	1/4"	8049957	SWDR 100 *	1/4-20 x 1" TEKS 3	1900 (20 ga.)			.036"-20 ga	3/16"	25	125
	3/8"	8050957	SWD 10	1/4-14 x 1" TEKS 3	1477 (16 ga.)			.060"-16 ga	3/16"	25	125
	3/8"	8080925	SWD 10-SS	1/4-14 x 1" TEKS 3	1477 (16 ga.)			.060"-16 ga	3/16"	25	125
	3/8"	8051957	SWD 15	1/4-14 x 1-1/2" TEKS 3	1477 (16 ga.)			.060"-16 ga	3/16"	25	125
	3/8"	8052957	SWD 20	1/4-14 x 2" TEKS 3	1477 (16 ga.)			.060"-16 ga	3/16"	25	125
	3/8"	8053957	SWD 516	5/16-18 x 1-1/4" TEKS 3	2480 (20 ga.)			.036"-20 ga	3/16"	25	125
UL FM	3/8"	8055957	SWDR 1 *	1/4-20 x 1" TEKS 3	1900 (20 ga.)	1500	1475	.036"-20 ga	3/16"	25	125
UL FM	3/8"	8054957	SWDR 1-1/2 *	12-24 x 1-1/2" TEKS 5	2375 (3/16")	1500	1475	.188"-3/16"	1/2"	25	125
UL FM	3/8"	8056957	SWDR 516 *	5/16-18 x 1-1/4" TEKS 3	2480 (20 ga.)	1500	1475	.036"-20 ga	3/16"	25	125
	3/8"	8057957	SWT 15	12-24 x 1-1/2" TEKS 5	2375 (3/16")			.188"-3/16"	1/2"	25	125

*Includes retaining nut

SAMMYS SWIVEL HEAD™ FOR STEEL - Swivel Application

Application

Product Features

- Eliminates distortion of threaded rod in sloped roof applications.
- Accommodates 3-1/2 x 12 pitch.
- Installs into angled z-purlin; allows threaded rod to hang plumb.
- Allows 17° deflection from vertical.
- Made in the U.S.A.

Watch a video demonstration at www.itwbuildex.com

#14 Black Nut Driver Part # 8113910

#14 SH Orange Nut Driver Part # 8273910

Approvals	Rod Size	Part Number	Model	Screw Descriptions	Ultimate Pullout (lbs)	UL Test Load (lbs)	FM Test Load (lbs)	Min Thick	Max Thick	Box Qty	Case Qty
SWIVEL MOUNT											
UL FM	3/8"	8137957	SH-DSTR 1*	1/4-20 X 1" TEKS 3	3220 (3/16")	1500	1475	.035"	3/16"	25	125
UL	3/8"	8268957	SH-TEK 50	12-24 x 1-3/4" TEKS 5	2368 (1/2" steel Vertical) 1306 (45° off Vertical) 2281 (3/16" HSS) 1585 (3/16" HSS 45° off Vertical)	1500 (Vertical) 850 (45° off Vertical)	4" 2-1/2"	3/16"	1/2"	25	125
	1/2"	8270957	SH-TEK 5.0	12-24 x 1-3/4" TEKS 5	2368 (1/2" steel Vertical) 1306 (45° off Vertical) 2281 (3/16" HSS) 1585 (3/16" HSS 45° off Vertical)			3/16"	1/2"	25	125

*Does not comply with ROHS requirements / Includes retaining nut

Universal Structural Attachment – CSBUNIV050EG

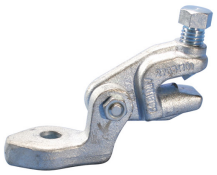

- Universal design allows one product to attach directly to concrete, wood, bar joist or I-beam adapters
- Snap-off bolt head helps enable easy installation and inspection of seismic sway braces
- Use for both lateral and longitudinal sway brace applications
- Works with 1" through 2" brace pipes and 1/4" angle iron braces to reduce inventory
- Center bolt does not require tightening
- Meets NFPA®-13 requirements for seismic sway bracing

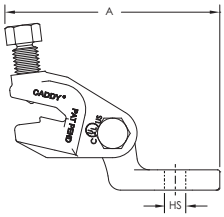

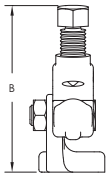

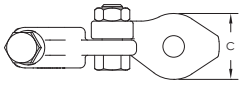

Part Number	CSBUNIV050EG
Material	Steel
Finish	Electrogalvanized
Hole Size (HS)	9/16"
A	5 1/4"
B	4"
C	1 5/8"
Brace Pipe Size	1" – 2"
Certifications	cULus FM OSHPD
Standard Packaging Quantity	25 pc
UPC	78285663294
EAN-13	8711893063493

UL Loads		
Brace Type	Service Pipe Size	Rating
Pipe	1" - 10"	3,000 lb
1/4" Thick Angle	1" - 8"	2,015 lb

FM Loads					
Brace Type	Service Pipe Size	Horizontal Capacity per Installation Angle from Vertical			
		30° - 44°	45° - 59°	60° - 74°	75° - 90°
Pipe	N/A	1,620 lb	2,300 lb	2,820 lb	3,140 lb

FM is a registered certification mark of FM Approvals LLC, LTD. NFPA is a registered trademark of National Fire Protection Association, Inc. UL, UR, cUL, cUR, cULus and cURus are registered certification marks of UL LLC.

WARNING
Pentair products shall be installed and used only as indicated in Pentair's product instruction sheets and training materials. Instruction sheets are available at erico.pentair.com and from your Pentair customer service representative. Improper installation, misuse, misapplication or other failure to completely follow Pentair's instructions and warnings may cause product malfunction, property damage, serious bodily injury and death and/or void your warranty.

© 2018 Pentair All rights reserved
Pentair, CADDY, CADWELD, CRITEC, ERICO, ERIFLEX, ERITECH and LENTON are owned by Pentair or its global affiliates.
All other trademarks are the property of their respective owners. Pentair reserves the right to change specifications without prior notice.

Universal Sway Brace – CSB0300

- Use for both lateral and longitudinal sway brace applications
- Unique slotted holes provide for easy slip-on installation eliminating loose hardware
- Snap-off bolt head helps enable easy installation and inspection of seismic sway braces
- Works with 1" through 2" brace pipes to reduce inventory
- Meets NFPA®-13 requirements for seismic sway bracing
- Meets requirements of the Buy American Act

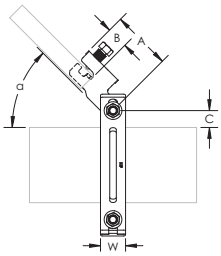

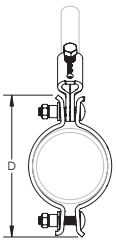

Part Number	CSB0300
Material	Steel
Finish	Electrogalvanized
Pipe Size	3"
Brace Pipe Size	1" – 2"
Width (W)	1 1/2"
Angle (a)	45°
A	3 9/16"
B	1 5/16"
C	1"
D	7 3/8"
Certifications	FM OSHPD UL
Standard Packaging Quantity	10 pc
UPC	78285692019
EAN-13	0782856920199

UL Loads								
Part Number	Lateral				Longitudinal			
	Sch 10/Sch 40 Service Pipe	Bull Moose Eddy Flow Service Pipe	Wheatland Mega-Flow Service Pipe	Youngstown Fire-Flo Service Pipe	Sch 10/Sch 40 Service Pipe	Bull Moose Eddy Flow Service Pipe	Wheatland Mega-Flow Service Pipe	Youngstown Fire-Flo Service Pipe
CSB0100xx	2,765 lb	N/A	N/A	N/A	1,600 lb	N/A	N/A	N/A
CSB0125xx	2,765 lb	2,765 lb	2,765 lb	N/A	1,000 lb	1,000 lb	1,000 lb	1,000 lb
CSB0150xx	2,765 lb	2,765 lb	2,765 lb	2,765 lb	1,600 lb	1,600 lb	1,600 lb	1,600 lb
CSB0200xx	2,765 lb	2,765 lb	2,765 lb	2,765 lb	2,015 lb	2,015 lb	2,015 lb	2,015 lb
CSB0250xx	2,765 lb	2,765 lb	2,765 lb	2,765 lb	2,015 lb	2,015 lb	2,015 lb	2,015 lb
CSB0300xx	2,765 lb	2,765 lb	2,765 lb	2,765 lb	2,100 lb	2,100 lb	2,100 lb	2,100 lb
CSB0400xx	2,765 lb	2,765 lb	2,765 lb	2,765 lb	2,600 lb	2,600 lb	2,600 lb	2,600 lb
CSB0500xx	2,765 lb	N/A	N/A	N/A	2,600 lb	N/A	N/A	N/A
CSB0600xx	2,765 lb	N/A	2,765 lb	N/A	2,600 lb	N/A	2,600 lb	N/A
CSB0800xx	2,765 lb	N/A	N/A	N/A	2,600 lb	N/A	N/A	N/A
CSB1000xx	2,800 lb	N/A	N/A	N/A	2,800 lb	N/A	N/A	N/A

FM Loads								
Part Number	Horizontal Capacity per Installation Angle from Vertical							
	Lateral				Longitudinal			
	30° - 44°	45° - 59°	60° - 74°	75° - 90°	30° - 44°	45° - 59°	60° - 74°	75° - 90°
FM Approved Lightwall, Sch 10 and Sch 40 Service Pipes								
0.188" Wall and Sch 40 Service Pipes								
CSB0100xx	1,490 lb	2,110 lb	2,580 lb	2,900 lb	1,290 lb	1,240 lb	1,260 lb	1,400 lb
CSB0125xx	1,380 lb	1,960 lb	2,400 lb	2,690 lb	1,290 lb	1,240 lb	1,260 lb	1,400 lb
CSB0150xx	1,380 lb	1,960 lb	2,400 lb	2,690 lb	1,200 lb	1,860 lb	2,180 lb	2,250 lb
CSB0200xx	1,380 lb	1,960 lb	2,400 lb	2,690 lb	1,200 lb	1,820 lb	2,180 lb	2,250 lb
CSB0250xx	1,440 lb	2,030 lb	2,490 lb	2,790 lb	1,320 lb	1,820 lb	2,190 lb	2,500 lb
CSB0300xx	1,390 lb	1,970 lb	2,420 lb	2,710 lb	1,300 lb	1,790 lb	2,190 lb	2,500 lb
CSB0400xx	1,390 lb	1,970 lb	2,420 lb	2,710 lb	1,300 lb	1,790 lb	2,190 lb	2,500 lb
CSB0500xx	1,390 lb	1,970 lb	2,420 lb	2,710 lb	1,300 lb	1,790 lb	2,190 lb	2,500 lb
CSB0600xx	1,460 lb	2,060 lb	2,520 lb	2,830 lb	1,410 lb	1,950 lb	2,350 lb	2,680 lb
CSB0800xx	1,330 lb	1,880 lb	2,300 lb	2,580 lb	1,400 lb	1,920 lb	2,350 lb	2,640 lb
CSB1000xx	1,330 lb	1,880 lb	2,300 lb	2,580 lb	1,400 lb	1,920 lb	2,350 lb	2,640 lb

Load ratings for Sch 10 may also be applied to AS 1074 Medium, GB/T 3091, EN 10255 (Medium or Heavy), and JIS G3452 pipe.
Load ratings for Sch 40 may also be applied to AS 1074 Heavy, GB/T 3091, EN 10255 (Heavy), and JIS G3454 pipe.
Load ratings for FM approved lightwall may also be applied to AS 1074 Lightwall, EN 10255 L, EN 10220, and GB/T 8163 pipe.

FM is a registered certification mark of FM Approvals LLC, LTD. NFPA is a registered trademark of National Fire Protection Association, Inc. UL, UR, cUL, cUR, cULus and cURus are registered certification marks of UL LLC.

WARNING
Pentair products shall be installed and used only as indicated in Pentair's product instruction sheets and training materials. Instruction sheets are available at erico.pentair.com and from your Pentair customer service representative. Improper installation, misuse, misapplication or other failure to completely follow Pentair's instructions and warnings may cause product malfunction, property damage, serious bodily injury and death and/or void your warranty.

© 2018 Pentair All rights reserved
Pentair, CADDY, CADWELD, CRITEC, ERICO, ERIFLEX, ERITECH and LENTON are owned by Pentair or its global affiliates.
All other trademarks are the property of their respective owners. Pentair reserves the right to change specifications without prior notice.

Quick Grip Lateral Sway Brace – CSBQG0300EG

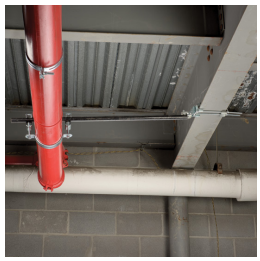

The Quick Grip Lateral Brace, part of the CADDY line of fire sprinkler bracing systems from Pentair, is designed to help simplify installations when bracing service pipe for seismic or other catastrophic events. It features an innovative design for quick attachment of brace pipe to service pipe saving time and money.

- Easy two-step installation elminates extra trips between structure and service pipe
- Works with 1" and 1 1/4" (25 mm and 32 mm) brace pipes to reduce inventory
- Yellow tips provide a visual indicator that the bolts have been properly torqued
- Easy installation with an impact wrench from the bottom side of the clamp
- Meets NFPA®-13 requirements for seismic sway bracing

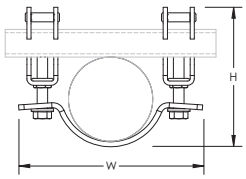

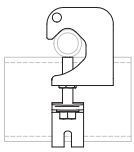

Part Number	CSBQG0300EG
Material	Steel
Finish	Electrogalvanized
Pipe Size	3"
Height (H)	6 1/8" – 6 1/2"
Width (W)	7 1/2"
Certifications	cULus FM OSHPD
Standard Packaging Quantity	10 pc
UPC	78285670535
EAN-13	8711893138740

UL Loads			
Part Number	Service Pipe Schedule	Lateral	
		1" Brace Pipe	1 1/4" Brace Pipe
CSBQG0250EG	Dyna-Flow®	2,015 lb	2,015 lb
	10	2,015 lb	2,015 lb
	40	2,015 lb	2,015 lb
CSBQG0300EG	Dyna-Flow®	2,015 lb	2,015 lb
	10	2,015 lb	2,015 lb
	40	2,015 lb	2,015 lb
CSBQG0400EG	Dyna-Flow®	2,015 lb	2,015 lb
	10	2,015 lb	2,015 lb
	40	2,015 lb	2,015 lb
CSBQG0600EG	Mega-Flow	2,015 lb	2,015 lb
	10	2,015 lb	2,015 lb
	40	2,015 lb	2,015 lb
CSBQG0800EG	10	2,015 lb	2,015 lb
	40	2,015 lb	2,015 lb

FM Loads					
Part Number	Service Pipe Schedule	Lateral			
		Horizontal Capacity per Installation Angle from Vertical			
		30° - 44°	45° - 59°	60° - 74°	75° - 90°
CSBQG0250EG	Lightwall	1,410 lb	2,000 lb	2,450 lb	2,740 lb
	10	1,410 lb	2,000 lb	2,450 lb	2,740 lb
	40	1,410 lb	2,000 lb	2,450 lb	2,740 lb
CSBQG0300EG	Lightwall	1,190 lb	1,680 lb	2,060 lb	2,300 lb
	10	1,190 lb	1,680 lb	2,060 lb	2,300 lb
	40	1,190 lb	1,680 lb	2,060 lb	2,300 lb
CSBQG0400EG	Lightwall	1,190 lb	1,680 lb	2,060 lb	2,300 lb
	10	1,190 lb	1,680 lb	2,060 lb	2,300 lb
	40	1,190 lb	1,680 lb	2,060 lb	2,300 lb
CSBQG0600EG	Lightwall	870 lb	1,230 lb	1,510 lb	1,690 lb
	10	870 lb	1,230 lb	1,510 lb	1,690 lb
	40	970 lb	1,370 lb	1,680 lb	1,870 lb
CSBQG0800EG	0.188" (Wall Thickness)	790 lb	1,110 lb	1,360 lb	1,520 lb
	40	790 lb	1,110 lb	1,360 lb	1,520 lb

Dyna-Flow is a registered trademark of Allied Tube & Conduit Corporation. FM is a registered certification mark of FM Approvals LLC, LTD. NFPA is a registered trademark of National Fire Protection Association, Inc. UL, UR, cUL, cUR, cULus and cURus are registered certification marks of UL LLC.

WARNING
Pentair products shall be installed and used only as indicated in Pentair's product instruction sheets and training materials. Instruction sheets are available at erico.pentair.com and from your Pentair customer service representative. Improper installation, misuse, misapplication or other failure to completely follow Pentair's instructions and warnings may cause product malfunction, property damage, serious bodily injury and death and/or void your warranty.

© 2018 Pentair All rights reserved
Pentair, CADDY, CADWELD, CRITEC, ERICO, ERIFLEX, ERITECH and LENTON are owned by Pentair or its global affiliates.
All other trademarks are the property of their respective owners. Pentair reserves the right to change specifications without prior notice.

½”-2” IPS Angle

INSIST ON FPPI®

Globe Valves, UL/ULC Listed* 300 psi

Description

Manufactured from cast brass*, our angle valves are for Trim or Drain applications and are designed to be suitable for all sprinkler systems including high pressure sprinkler systems. The soft seat design utilizes NBR Nancar N70 material or PTFE for positive sealing to 300 psi. The most common use for the 2” IPS size is as a system drain at the riser. May be used on both alarm valve and shotgun type riser assemblies.

Installation

Installation of the Trim/Drain valves can be accomplished using normal installation methods. It is important to “hold back” each component in the piping assembly to prevent over-tightening of the previously installed component. Use a suitable thread sealant such as PipeFit Thread Sealant with PTFE or FPPI PTFE Pipe Thread Tape to as- sure a positive seal between the valves and the installed pipe.

*UL/ULC Listed, 2R97.

Caution: Do not overtighten male threads into the valve body. Thread damage or cracking of the valve body may occur.

Specifications

Materials:
Cast Brass*
Body
Bonnet

Brass* ASTM B16:
Gland
Holder
Stem
Washer

Stainless Steel:
Nut
NBR Nancar N70
Rubber seat
JIS FC20
Hand wheel

Sizes:
½” IPS FxF
¾” IPS FxF
1” IPS FxF
1¼” IPS FxF
1½” IPS FxF
2” IPS FxF

*Contains lead. Not for use in water systems intended for human consumption.

3198 LIONSHEAD AVE
CARLSBAD, CA 92010
TEL + 1 760 599-1168
+ 1 800 344-1822
FAX + 1 800 344-3775

© 2012 Fire Protection Products, Inc.

UL LISTED c UL LISTED

1-pc and 2-pc Sprinkler Head Guards

INSIST ON FPPI®

Description

Both the 1-pc and 2-pc head guards are designed to provide protection against low level impacts to the sprinkler head. The 1-pc design features a dual hook attaching system to allow for installation on most ½” and ¾” IPS sprinkler heads. The 1-pc also can be provided with a water shield for in-rack sprinkler systems. The 2-pc designed features a cage and clamping base plate. This design can provide additional protection for sprinklers that may experience greater opportunity for repeated abuse. Both types of head guards are available in either red or chrome finish. Caution: Head guards will not protect sprinkler heads from severe abuse or impact.

Installation

1-pc Head Guard installation can be accomplished without tools and can be installed in the pendent* or upright position. Disengage both hooks on either side of the guard. Spread the cage open just enough to clear the sprinkler frame and deflector being careful not to damage the sprinkler. Engage the open end of the cage at the base of the sprinkler between the frame and the threads. Reengage both hooks on either side of the sprinkler. 2-pc Head Guard installation requires the use of a common screw driver. Place the base plate around the top thread of the sprinkler head closest to the frame. Close the base plate around the thread. At the same time, hold the cage to the base plate until the base plate engages the cage with its four tangs. Adjust the set screw until base plate is firmly attached to the sprinkler.

Specifications

Type:
Formed Wire Cage

Sizes:
1-pc
½” or ¾” IPS
2-pc
½” IPS

Material:
.12” steel wire

Finishes:
Red enamel
Chrome

*The 1-pc head guard with shield will not function properly when installed in the pendent position. For this application use a 1-pc head guard without the shield and a water shield that will thread onto the sprinkler base according the sprinkler head manufacturers specifications.

3198 LIONSHEAD AVE
CARLSBAD, CA 92010
TEL + 1 760 599-1168
+ 1 800 344-1822
FAX + 1 800 344-3775

© 2012 Fire Protection Products, Inc.

data sheet

ARGCO

GUARANTEED

ONE PIECE DOUBLE HOOK HEADGUARD

FOR PROTECTION OF SPRINKLER HEADS IN INDUSTRIAL APPLICATIONS (storage racks, low drops, etc.)

Heavy wire construction with latch hooks, exposed for easy installation

Available with spot welded 4-1/2" baffle plate

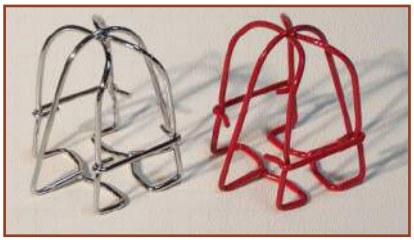

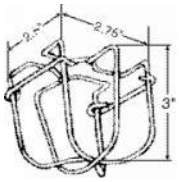

Designed to provide protection against low level impacts to the sprinkler head.

Provides additional protection for sprinklers that may experience greater opportunity for repeated abuse.

Caution: Head guards will not protect sprinkler heads from severe abuse or impact.

Finish: Red or WhitePowder Coated
Chrome Plated

45-30-100: 1/2" IPS (Red)
45-30-100: 1/2" IPS (Chrome Plated)
45-30-100: 1/2" IPS (White)
45-30-103: 3/4" IPS
45-30-104: with baffle plate (Red)

ARGCO's one piece double hook headguards have the same design and are compatible with all sprinkler head manufacturers.

1 piece Head Guard installation can be accomplished without tools and can be installed in the pendent or upright position.

Unclasp both hooks on either side of the guard.

Spread the cage open just enough to clear the sprinkler head frame and deflector being careful not to damage the sprinkler head.

Engage the open end of the cage at the base of the sprinkler head between the frame and the threads.

Reengage both hooks on either side of the sprinkler head.

The information contained herein is produced in good faith and is believed to be reliable but is for guidance only. ARGCO and its agents cannot assume liability or responsibility for results obtained in the use of its product by persons whose methods are outside or beyond our control. It is the user's responsibility to determine the suitability of any of the products, methods of use, or preparation prior to use, mentioned in our literature. It is the user's responsibility to observe and adapt such precautions as may be advisable for the protection of personnel and property in the handling and use of any of our products.

FOR MORE INFORMATION CALL ARGCO AT 1-800-986-5787
OR LOG ONTO WWW.ARGCO.COM

238-01465

data sheet

ARGCO

GUARANTEED

TWO PIECE UNIVERSAL HEADGUARD

FOR PROTECTION OF SPRINKLER HEADS IN INDUSTRIAL APPLICATIONS (storage racks, low drops, etc.)

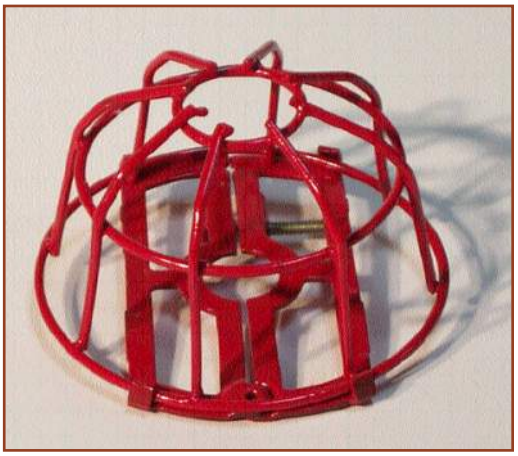

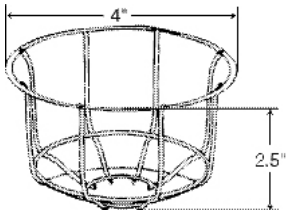

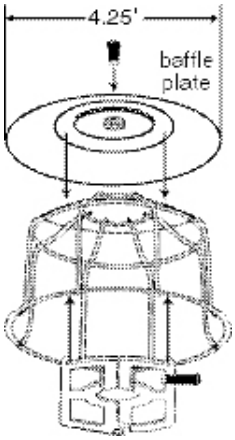

Designed to provide protection against low level impacts to the sprinkler head.
Features a cage and clamping base plate. This design can provide additional protection for sprinklers that may experience greater opportunity for repeated abuse.
Caution: Head guards will not protect sprinkler heads from severe abuse or impact.

Finish: Red Powder Coated

45-30-150: 1/2" IPS
45-30-157: 3/4" IPS
45-30-153: baffle plate (optional)

ARGCO's two piece universal headguards have the same design and are compatible with all sprinkler head manufacturers.

Installation requires the use of a flat head screw driver.

Place the base plate around the top thread of the sprinkler head closest to the frame.

Close the base plate around the thread. At the same time, hold the cage to the base plate until the base plate engages the cage with its four tangs.

Adjust the set screw until base plate is firmly attached to the sprinkler.

The information contained herein is produced in good faith and is believed to be reliable but is for guidance only. ARGCO and its agents cannot assume liability or responsibility for results obtained in the use of its product by persons whose methods are outside or beyond our control. It is the user's responsibility to determine the suitability of any of the products, methods of use, or preparation prior to use, mentioned in our literature. It is the user's responsibility to observe and adapt such precautions as may be advisable for the protection of personnel and property in the handling and use of any of our products.

FOR MORE INFORMATION CALL ARGCO AT 1-800-986-5787
OR LOG ONTO WWW.ARGCO.COM

data sheet

Plastic One Piece Wallplates

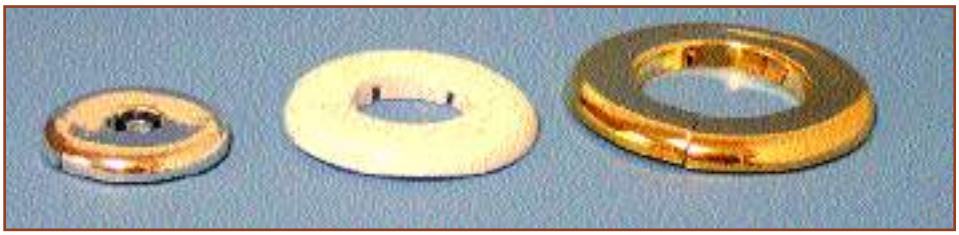

Simply Bend Open...

Tough, durable plastic

Non-breakable

100 % Rust Proof

...and Snap Closed!

Stock finishes: chrome plated, brass plated, white

SIZE	Chrome Plated	White	Brass Plated
3/8" IPS & 1/2" CPS	4525301	4525401	4525501
1/2" IPS & 3/4" CPS	4525100	4525200	4525130
3/4" IPS	4525101	4525200	4525131
1" IPS	4525102	4525202	4525132
1" CPS	4525302	4525402	4525502
1-1/4" IPS & 1-1/2" CPS	4525103	4525203	4525133
1-1/4" CPS	4525303	4525403	4525503
1-1/2" IPS	4525104	4525204	4525134

SIZE	Chrome Plated	White	Brass Plated
2" IPS	4525105	4525205	4525135
2" CPS	4525304	4525404	4525504
2-1/2" IPS	4525106	4525206	4525136
3" IPS	4525107	4525207	4525137
4" IPS	4525108	4525208	4525138
5" IPS	4525109	4525209	4525139
6" IPS	4525110	4525210	4525140
8" IPS	4525111	4525211	4525141

Installation

The plastic wall plates may be installed by two methods.

1. Place the wall plate over the pipe while the pipe is being installed.
2. Split the wall plate at the area on the back of the wall plates that has been molded to break apart.
   Carefully bend the wall plate a this weakened area until fully separated.
   Then carefully twist the wall plate open just enough to be placed around the pipe.
   Allow the two ends of the separated wall plate to "spring" back into shape.
   Slide the wall plate up against the base material to finish the installation.

These wall plates should not be painted. Certain chemicals contained in paint may cause the wall plates to deteriorate.

The information contained herein is produced in good faith and is believed to be reliable but is for guidance only. ARGCO and its agents cannot assume liability or responsibility for results obtained in the use of its product by persons whose methods are outside or beyond our control. It is the user's responsibility to determine the suitability of any of the products, methods of use, or preparation prior to use, mentioned in our literature. It is the user's responsibility to observe and adapt such precautions as may be advisable for the protection of personnel and property in the handling and use of any of our products.

FOR MORE INFORMATION CALL ARGCO AT 800-854-1015
OR LOG ONTO ARGCO.COM

FireLock® Rigid Coupling
Style 005H
with Vic-Plus™ Gasket System

10.02

Patented

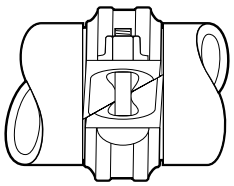

Exaggerated for clarity

Approvals/Listings:

LPCB 104-1a/02

See Victaulic Publication 10.01 for more details.

LPC and VdS Approved, see notes on page 3

Product Description:

FireLock Style 005H rigid coupling has a unique, patented angle-pad design which allows the housings to offset while clamping the grooves. By permitting the housings to slide on the angled bolt pads, rigidity is obtained.

Support and hanging requirements correspond to NFPA 13 Sprinkler Systems. Angle-pad design permits assembly by removing one nut/bolt and swinging the housing over the gasket. This reduces components to handle during assembly.

Style 005H FireLock coupling are designed and recommended for use ONLY on fire protection systems.

Vic-Plus™ Gasket System:

Victaulic offers a gasket system which requires no field lubrication on wet pipe systems that are hydrostatically tested. The Vic-Plus System (patented) is dry, clean, and non-toxic. It reduces assembly time substantially and eliminates the mess and chance of over-lubrication. Please refer to the latest copy of the Victaulic Field Installation Handbook (I-100) for supplemental lubrication requirements and dry pipe fire protection system notes.

Material Specifications:

Housing: Ductile iron conforming to ASTM A-536, grade 65-45-12. Ductile iron conforming to ASTM A-395, grade 65-45-15, is available upon special request.

Housing Coating: (specify choice)

Standard: Orange enamel (North America); red enamel (Europe)

☐ Optional: Hot dipped galvanized

Coupling Gasket: (specify choice)

NOTE: Additional gasket styles are available. Contact Victaulic for details.

☐ Grade "E" EPDM Type A Vic-Plus™ Gasket System[1]

EPDM (Violet color code). FireLock products have been Listed by Underwriters Laboratories Inc. and Approved by Factory Mutual Research for wet and dry (oil free air) sprinkler services up to the rated working pressure using the Grade "E" Type A Vic-Plus™ Gasket System, requiring no field lubrication for most installation conditions.

☐ Grade "L" silicone

Recommended for dry heat, air without hydrocarbons to +350°F and certain chemical services.

For dry services, Victaulic continues to recommend the use of Grade "E" Type A FlushSeal® Gasket. Contact Victaulic for details.

Bolts/Nuts: Heat-treated plated carbon steel, trackhead meeting the physical and chemical requirements of ASTM A-449 and physical requirements of ASTM A-183.

[1] Standard gasket and FlushSeal gasket approved for dry pipe systems to –40°F/–40°C. Based on "typical" pipe surface conditions, supplemental lubricant is recommended for services installed below 0°F/–18°C and for all dry pipe systems or systems to be subjected to air tests prior to being filled with water. Supplemental lubrication may also be required on pipe with raised or undercut weld seams or pipe that has voids and/or cracks at the weld seams. Victaulic continues to recommend the use of FlushSeal gaskets for dry services.

Job/Owner

System No.	
Location	

Contractor

Submitted By	
Date	

Engineer

Spec Section	
Paragraph	
Approved	
Date	

 © 2014 Victaulic Company. All rights reserved.

Dimensions:

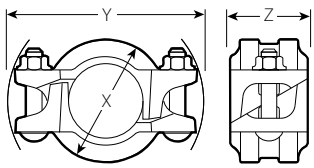

Rated for wet and dry sprinkler systems at 350 psi/2413 kPa for 1 ¼ – 4"/32 – 100 mm sizes and 300 psi /2068 kPa for 4 ¼ – 8"/108 – 200 mm sizes; Schedule 10 roll grooved or Schedule 40 cut or roll grooved steel pipe. Style 005H is rigid and does not accommodate expansion, contraction or angular deflection.

Nominal Size inches mm	Actual Outside Diameter inches mm	Maximum Working Pressure[1 4] psi kPa	Maximum End Load[1] lbs. N	Allow. Pipe End Separation[2] inches mm	Bolt/Nut[3] No. – size inches	Dimensions X inches mm	Y inches mm	Z inches mm	Approx. Weight Each lbs. kg
1 ¼ 32	1.660 42.4	350 2413	755 3370	0.05 1.2	2 – ⅜ × 2 ¼	2.75 70	4.50 114	1.88 48	1.2 0.5
1 ½ 40	1.900 48.3	350 2413	990 4415	0.05 1.2	2 – ⅜ × 2 ¼	3.00 76	4.75 121	1.88 48	1.2 0.5
2 50	2.375 60.3	350 2413	1550 6900	0.07 1.7	2 – ⅜ × 2 ½	3.50 89	5.25 133	1.88 48	1.6 0.7
2 ½ 65	2.875 73.0	350 2413	2270 10110	0.07 1.7	2 – ⅜ × 2 ½	4.00 102	5.75 146	1.88 48	1.9 .09
76.1 mm	3.000 76.1	350 2413	2475 11010	0.07 1.7	2 – ⅜ × 2 ½	4.13 105	5.75 146	1.88 48	1.9 0.9
3 80	3.500 88.9	350 2413	3365 14985	0.07 1.7	2 – ⅜ × 2 ½	4.63 118	6.13 156	1.88 48	2.1 1.0
4 100	4.500 114.3	350 2413	5565 24770	0.16 4.1	2 – ⅜ × 2 ½	5.75 146	7.25 184	2.13 54	3.1 1.4
108.0 mm	4.250 108.0	300 2068	4255 18940	0.16 4.1	2 – ⅜ × 2 ½	5.63 143	7.25 184	2.13 54	3.1 1.4
5 125	5.563 141.3	300 2068	7290 32445	0.16 4.1	2 – ½ × 3	6.88 175	9.00 229	2.13 54	4.5 2.0
133.0 mm	5.250 133.0	300 2068	6495 28900	0.16 4.1	2 – ½ × 2 ¾	6.63 168	9.00 229	2.13 54	4.5 2.0
139.7 mm	5.500 139.7	300 2068	7125 31715	0.16 4.1	2 – ½ × 2 ¾	6.88 175	9.00 229	2.13 54	4.8 2.2
6 150	6.625 168.3	300 2068	10340 46020	0.16 4.1	2 – ½ × 3	8.00 203	10.00 254	2.13 53	5.0 2.3
159.0 mm	6.250 159.0	300 2068	9200 40955	0.16 4.1	2 – ½ × 2 ¾	7.63 194	10.00 254	2.13 54	5.5 2.5
165.1 mm	6.500 165.1	300 2068	9955 44295	0.16 4.1	2 – ½ × 3	8.15 207	10.00 254	2.13 54	5.5 2.5
8 200	8.625 219.1	300 2068	17525 78000	0.19 4.8	2 – ⅝ × 4 ¼	10.50 267	13.14 334	2.63 67	11.3 5.1

1 Working Pressure and End Load are total, from all internal and external loads, based on standard weight (ANSI) steel pipe, standard roll or cut grooved in accordance with Victaulic specifications. Contact Victaulic for performance on other pipe. WARNING: FOR ONE TIME FIELD TEST ONLY, the Maximum Joint Working Pressure may be increased to 1½ times the figures shown.

2 The allowable pipe separation dimension shown is for system layout purposes only. Style 005H couplings are considered rigid connections and will not accommodate expansion or contraction of the piping system.

3 Number of bolts required equals number of housing segments. Metric thread size bolts are available (color coded gold) for all coupling sizes upon request. Contact Victaulic for details.

4 Style 005H couplings are VdS and LPC Approved to 16 Bar/235 psi.

 © 2014 Victaulic Company. All rights reserved.

Listings/Approvals:

The information provided below is based on the latest listing and approval data at the time of publication. Listings/Approvals are subject to change and/or additions by the approvals agencies.

Contact Victaulic for performance on other pipe and the latest listings and approvals.

Related Working Pressure psi					Related Working Pressure psi					Related Working Pressure psi				
Pipe Sch.	**Size** inches	**UL**	**ULC**	**FM**	**Pipe Sch.**	**Size** inches	**UL**	**ULC**	**FM**	**Pipe Sch.**	**Size** inches	**UL**	**ULC**	**FM**
5	1¼ – 3	175	175	175	EL	1¼ – 2	300	N/A	N/A	MT	1¼ – 2	300	N/A	N/A
10, 40	1¼ – 3	350	350	350	ET	1¼ – 2	300	N/A	N/A	STF	1¼ – 4	N/A	N/A	300
	5 – 8	300	300	300	EZ	4 – 6	300[6]	N/A	300	Steady Thd.	1¼ – 2	N/A	N/A	300
BLT	1¼ – 2	300	300	N/A	FF	1¼ – 4	N/A	N/A	300	TF	3 – 8	N/A	N/A	300
DF	1¼ – 4	300	300	300	GAL -7	1¼ – 2	300	N/A	N/A	WLS	1¼ – 2	300	300	N/A
DT	1¼ – 2	300	300	N/A	MLT	1¼ – 2	300	N/A	N/A	XL	1¼ – 3	300	300	300
EF	1¼ – 4	175[7]	N/A	175	MF	1¼ – 4	300	N/A	300[5]					

5 FM approved for service in 1 1/2 – 4" pipe.

6 UL Listed for service up to 4" pipe only.

7 UL Listed for service up to 3" only.

Installation
Reference should always be made to the I-100 Victaulic Field Installation Handbook for the product you are installing. Handbooks are included with each shipment of Victaulic products for complete installation and assembly data, and are available in PDF format on our website at www.victaulic.com.

Warranty
Refer to the Warranty section of the current Price List or contact Victaulic for details.

Note
This product shall be manufactured by Victaulic or to Victaulic specifications. All products to be installed in accordance with current Victaulic installation/assembly instructions. Victaulic reserves the right to change product specifications, designs and standard equipment without notice and without incurring obligations.

Trademarks
Victaulic® is a registered trademark of Victaulic Company.

 © 2014 Victaulic Company. All rights reserved.

Victaulic® Flexible Coupling
Style 75

06.05

1 – 8"/DN25 – DN200

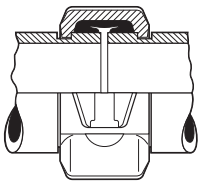

Exaggerated for clarity

1.0 PRODUCT DESCRIPTION

Available Sizes

- 1 – 8"/DN25 – DN200

Pipe Material

- Carbon steel
- Stainless steel

Maximum Working Pressure

- Accommodates pressures ranging from full vacuum (29.9 in Hg/760 mm Hg) up to 500 psi/3447 kPa/34 bar
- Working pressure dependent on material, wall thickness and size of pipe

Application

- Joins standard roll grooved and cut grooved pipe, as well as grooved fittings, valves and accessories
- Provides a flexible pipe joint which allows for expansion, contraction and deflection
- Up to 50% lighter in weight than standard Victaulic Style 77 or Style 177N flexible couplings

2.0 CERTIFICATION/LISTINGS

NOTES

- Download publication 10.01 for Fire Protection Certifications/Listings Reference Guide.
- See publication 02.06: Victaulic Potable Water Approvals ANSI/NSF for potable water approvals if applicable.

ALWAYS REFER TO ANY NOTIFICATIONS AT THE END OF THIS DOCUMENT REGARDING PRODUCT INSTALLATION, MAINTENANCE OR SUPPORT.

System No.		Location	
Submitted By		Date	

Spec Section		Paragraph	
Approved		Date	

© 2017 Victaulic Company. All rights reserved.

3.0 SPECIFICATIONS – MATERIAL

Housing: Ductile iron conforming to ASTM A536, Grade 65-45-12. Ductile iron conforming to ASTM A395, Grade 65-45-15, is available upon special request.

Housing Coating: (specify choice)

- ☐ Standard: Orange enamel
- ☐ Optional: Hot dipped galvanized
- ☐ Optional: Contact Victaulic with your requirements for other coatings.

Gasket: (specify choice[1])

- ☐ **Grade "E" EPDM**
  EPDM (Green stripe color code). Temperature range –30ºF to +230ºF/–34ºC to +110ºC. May be specified for hot water service within the specified temperature range plus a variety of dilute acids, oil-free air and many chemical services. UL Classified in accordance with ANSI/NSF 61 for cold +73°F/+23°C and hot +180°F/+82°C potable water service and ANSI/NSF 372. **NOT COMPATIBLE FOR USE WITH PETROLEUM SERVICES OR STEAM SERVICES.**
- ☐ **Grade "T" Nitrile**
  Nitrile (Orange stripe color code). Temperature range –20ºF to +180ºF/–29ºC to +82ºC. May be specified for petroleum products, air with oil vapors, vegetable and mineral oils within the specified temperature range; not compatible for hot dry air over +140°F/+60°C and water over +150°F/+66°C. **NOT COMPATIBLE FOR USE WITH HOT WATER.**
- ☐ **Others**
  For alternate gasket selection, reference publication 05.01: Victaulic Seal Selection Guide - Elastomeric Seal Construction.

1 Services listed are General Service Guidelines only. It should be noted that there are services for which these gaskets are not compatible. Reference should always be made to the latest Victaulic Seal Selection Guide for specific gasket service guidelines and for a listing of services which are not compatible.

Bolts/Nuts: (specify choice[2])

- ☐ Standard: Carbon steel oval neck track bolts meeting the mechanical property requirements of ASTM A449 (imperial) and ISO 898-1 Class 9.8 (metric). Carbon steel hex nuts meeting the mechanical property requirements of ASTM A563 Grade B (imperial - heavy hex nuts) and ASTM A563M Class 9 (metric - hex nuts). Track bolts and hex nuts are zinc electroplated per ASTM B633 ZN/FE5, finish Type III (imperial) or Type II (metric).
- ☐ Optional (imperial): Stainless steel oval neck track bolts meeting the mechanical property requirements of ASTM F593, Group 2 (316 stainless steel), condition CW. Stainless steel heavy nuts meeting the mechanical property requirements of ASTM F594, Group 2 (316 stainless steel), condition CW, with galling reducing coating.

2 Optional bolts/nuts are available in imperial sizes only.

 © 2017 Victaulic Company. All rights reserved.

4.0 DIMENSIONS

Style 75

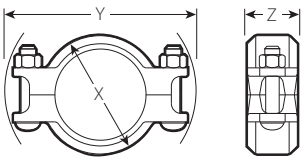

Size		Pipe End Separation[3]	Deflection from Centerline[3]		Bolt/Nut		Dimensions			Weight
Nominal inches DN	Actual Outside Diameter inches mm	Allowable inches mm	Per Cplg. Degrees	Pipe inches/ft. mm/m	Qty.	Size imperial metric	X inches mm	Y inches mm	Z inches mm	Approx. (Each) lb kg
1 DN25	1.315 33.7	0–0.06 0–1.6	2º–43'	0.57 48	2	⅜ x 2 M10 x 51	2.38 61	4.27 108	1.77 45	1.3 0.6
1 ¼ DN32	1.660 42.4	0–0.06 0–1.6	2º–10'	0.45 38	2	⅜ x 2 M10 x 51	2.68 68	4.61 117	1.77 45	1.4 0.6
1 ½ DN40	1.900 48.3	0–0.06 0–1.6	1º–56'	0.40 33	2	⅜ x 2 M10 x 51	2.91 74	4.82 122	1.77 45	1.5 0.6
2 DN50	2.375 60.3	0–0.06 0–1.6	1º–31'	0.32 26	2	⅜ x 2 M10 x 51	3.43 87	5.22 133	1.88 48	1.7 0.8
2 ½	2.875 73.0	0–0.06 0–1.6	1º–15'	0.26 22	2	⅜ x 2 M10 x 51	3.88 98	5.68 144	1.88 48	1.9 0.9
DN65	3.000 76.1	0–0.06 0–1.6	1º–12'	0.26 22	2	⅜ x 2 M10 x 51	4.00 102	5.90 150	1.88 48	1.9 0.9
3 DN80	3.500 88.9	0–0.06 0–1.6	1º–2'	0.22 18	2	½ x 2 ¾ M12 x 70	4.50 114	7.00 178	1.88 48	2.9 1.3
3 ½ DN90	4.000 101.6	0–0.06 0–1.6	0º-54'	0.19 16	2	½ x 2 ¾ M12 x 70	5.00 127	7.50 191	1.88 48	2.9 1.3
4 DN100	4.500 114.3	0–0.13 0–3.2	1º–36'	0.34 28	2	½ x 2 ¾ M12 x 70	5.80 147	8.03 204	2.13 54	4.1 1.9
	4.250 108.0	0–0.13 0–3.2	1º–41'	0.35 29	2	½ x 2 ¾ M12 x 70	5.55 141	7.79 198	2.13 54	3.7 1.7
	5.000 127.0	0–0.13 0–3.2	1º–26'	0.25 21	2	⅝ x 3 ¼ M16 x 83	6.13 156	9.43 240	2.13 54	5.5 2.5
5	5.563 141.3	0–0.13 0–3.2	1º–18'	0.27 23	2	⅝ x 3 ¼ M16 x 83	6.88 175	10.07 256	2.13 54	5.8 2.6
	5.250 133.0	0–0.13 0–3.2	1º–21'	0.28 24	2	⅝ x 3 ¼ M16 x 83	6.55 166	9.37 238	2.13 54	6.0 2.7
DN125	5.500 139.7	0–0.13 0–3.2	1º–18'	0.28 24	2	⅝ x 3 ¼ M16 x 83	6.80 173	9.59 244	2.13 54	6.3 2.9
	6.000 152.4	0–0.13 0–3.2	1º–12'	0.21 18	2	⅝ x 3 ¼ M16 x 83	7.38 187	10.48 266	1.88 48	6.2 2.8
6 DN150	6.625 168.3	0–0.13 0–3.2	1º–5'	0.23 18	2	⅝ x 3 ¼ M16 x 83	8.00 203	11.07 281	2.13 54	7.0 3.2
	6.250 159.0	0–0.13 0–3.2	1º–9'	0.24 20	2	⅝ x 3 ¼ M16 x 83	7.63 194	10.49 266	2.13 54	6.8 3.1
	6.500 165.1	0–0.13 0–3.2	1º–7'	0.23 58	2	⅝ x 3 ¼ M16 x 83	7.84 199	10.66 271	2.08 53	6.6 3.0
	8.515 216.3	0–0.13 0–3.2	0º–51'	0.18 46	2	¾ x 4 ¼ M20 x 108	10.19 259	13.75 350	2.32 59	13.2 6.0
8 DN200	8.625 219.1	0–0.13 0–3.2	0º–50'	0.18 14	2	¾ x 4 ¼ M20 x 108	10.34 263	13.97 355	2.13 59	12.4 5.6

[3] Allowable Pipe End Separation and Deflection figures show the maximum nominal range of movement available at each joint for standard **roll** grooved pipe. Figures for standard **cut** grooved pipe may be doubled. These figures are maximums; for design and installation purposes these figures should be reduced by: 50% for ¾ – 3 ½"/DN20 – DN90; 25% for 4"/DN100 and larger.

NOTE

- Metric thread size bolts are available (color coded gold) for all coupling sizes upon request. Contact Victaulic for details.

 © 2017 Victaulic Company. All rights reserved.

5.0 PERFORMANCE

Style 75

Size		Maximum Working Pressure[4]	Maximum End Load[4]
Nominal inches DN	**Actual Outside Diameter** inches mm	psi kPa	lb N
1 DN25	1.315 33.7	500 3447	680 3,025
1 ¼ DN32	1.660 42.4	500 3447	1080 4,805
1 ½ DN40	1.900 48.3	500 3447	1420 6,320
2 DN50	2.375 60.3	500 3447	2215 9,860
2 ½	2.875 73.0	500 3447	3245 14,440
DN65	3.000 76.1	500 3447	3535 15,730
3 DN80	3.500 88.9	500 3447	4800 21,360
3 ½ DN90	4.000 101.6	500 3447	6300 28,035
4 DN100	4.500 114.3	500 3447	7950 35,380
	4.250 108.0	450 3103	6380 28,395
	5.000 127.0	450 3103	8820 39,250
5	5.563 141.3	450 3103	10935 48,660
	5.250 133.0	450 3103	9735 43,325
DN125	5.500 139.7	450 3103	10665 47,460
	6.000 152.4	450 3103	12735 56,670
6 DN150	6.625 168.3	450 3103	15525 69,085
	6.250 159.0	450 3103	13800 61,405
	6.500 165.1	450 3103	14930 66,412
	8.515 216.3	450 3103	25625 113,986
8 DN200	8.625 219.1	450 3103	26280 116,945

[4] Working Pressure and End Load are total, from all internal and external loads, based on ANSI B36.10 sized carbon steel pipe, grooved in accordance with Victaulic specifications. Contact Victaulic for performance on other pipe.

NOTE

- WARNING: FOR ONE TIME FIELD TEST ONLY, the Maximum Joint Working Pressure may be increased to 1½ times the figures shown.

 © 2017 Victaulic Company. All rights reserved.

6.0 NOTIFICATIONS

WARNING

- **Victaulic RX roll sets must be used when grooving light-wall/thin-wall stainless steel pipe for use with Victaulic Couplings.**

Failure to use Victaulic RX roll sets when grooving light-wall/thin-wall stainless steel pipe may cause joint failure, resulting in serious personal injury and/or property damage.

NOTICE

- **Victaulic RX grooving rolls must be ordered separately. They are identified by a silver color and the designation RX on the front of the roll sets.**

7.0 REFERENCE MATERIALS

02.06: Victaulic® Potable Water Approvals ANSI/NSF
05.01: Victaulic® Seal Selection Guide - Elastomeric Seal Construction
06.15: Victaulic® Pressure Ratings and End Loads for Victaulic Couplings on Steel Pipe
10.01: Victaulic® Products for Fire Protection Pipings Systems - Regulatory Approval Reference Guide
17.01: Victaulic® Pipe Preparation for Use on Stainless Steel Pipe With Victaulic Products
17.09: Victaulic® Ductile Iron Grooved Couplings Performance Data for Stainless Steel Pipe
25.01: Victaulic® Standard Groove Specifications
26.01: Victaulic® Design Data
29.01: Victaulic® Terms and Conditions of Sale
I-100: Victaulic® Field Installation Handbook

User Responsibility for Product Selection and Suitability
Each user bears final responsibility for making a determination as to the suitability of Victaulic products for a particular end-use application, in accordance with industry standards and project specifications, and the applicable building codes and related regulations as well as Victaulic performance, maintenance, safety, and warning instructions. Nothing in this or any other document, nor any verbal recommendation, advice, or opinion from any Victaulic employee, shall be deemed to alter, vary, supersede, or waive any provision of Victaulic Company's standard conditions of sale, installation guide, or this disclaimer.

Intellectual Property Rights
No statement contained herein concerning a possible or suggested use of any material, product, service, or design is intended, or should be constructed, to grant any license under any patent or other intellectual property right of Victaulic or any of its subsidiaries or affiliates covering such use or design, or as a recommendation for the use of such material, product, service, or design in the infringement of any patent or other intellectual property right. The terms "Patented" or "Patent Pending" refer to design or utility patents or patent applications for articles and/or methods of use in the United States and/or other countries.

Note
This product shall be manufactured by Victaulic or to Victaulic specifications. All products to be installed in accordance with current Victaulic installation/assembly instructions. Victaulic reserves the right to change product specifications, designs and standard equipment without notice and without incurring obligations.

Installation
Reference should always be made to the Victaulic installation handbook or installation instructions of the product you are installing. Handbooks are included with each shipment of Victaulic products, providing complete installation and assembly data, and are available in PDF format on our website at www.victaulic.com.

Warranty
Refer to the Warranty section of the current Price List or contact Victaulic for details.

Trademarks
Victaulic and all other Victaulic marks are the trademarks or registered trademarks of Victaulic Company, and/or its affiliated entities, in the U.S. and/or other countries.

 © 2017 Victaulic Company. All rights reserved.

Victaulic® FireLock™ Fittings

10.03

1.0 PRODUCT DESCRIPTION

Available Sizes

- 1 ¼ – 8"/DN32 – DN200

Maximum Working Pressure

- Pressure ratings for Victaulic FireLock™ Fittings conform to the ratings of Victaulic FireLock EZ™ Style 009N couplings (refer to publication 10.64 for more information).

Application

- FireLock™ fittings are designed for use exclusively with Victaulic couplings that have been Listed or Approved for Fire Protection Services. Use of other couplings or flange adapters may result in bolt pad interference.
- Connects pipe, provides change in direction and adapts sizes or components

Pipe Materials

- Carbon steel

2.0 CERTIFICATION/LISTINGS

EN 10311
Regulation (EU)
No. 305/2011

3.0 SPECIFICATIONS – MATERIAL

Fitting: Ductile iron conforming to ASTM A536, Grade 65-45-12.

Fitting Coating:

- ☐ Orange enamel.
- ☐ Red enamel in Europe, Middle East, Africa, and India.
- ☐ Optional: Hot dipped galvanized.

ALWAYS REFER TO ANY NOTIFICATIONS AT THE END OF THIS DOCUMENT REGARDING PRODUCT INSTALLATION, MAINTENANCE OR SUPPORT.

System No.		Location	
Submitted By		Date	

Spec Section		Paragraph	
Approved		Date	

© 2017 Victaulic Company. All rights reserved.

4.0 DIMENSIONS

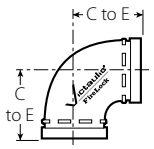

No. 001

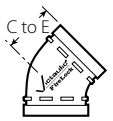

No. 003

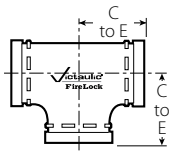

No. 002

No. 006

Nominal Size inches DN	Actual Outside Diameter inches mm	No. 001 90° Elbow C to E inches mm	No. 001 90° Elbow Approximate Weight Each lb kg	No. 003 45° Elbow C to E inches mm	No. 003 45° Elbow Approximate Weight Each lb kg	No. 002 Straight Tee C to E inches mm	No. 002 Straight Tee Approximate Weight Each lb kg	No. 006 Cap T inches mm	No. 006 Cap Approximate Weight Each lb kg
1 ¼	1.660	—	—	—	—	—	—	0.82	0.3
DN32	42.4	—	—	—	—	—	—	21	0.1
1 ½	1.900	—	—	—	—	—	—	0.82	0.4
DN40	48.3	—	—	—	—	—	—	21	0.2
2	2.375	2.75	1.7	2.00	1.8	2.75	2.4	0.88	0.6
DN50	60.3	70	0.8	51	0.8	70	1.1	22	0.3
2 ½	2.875	3.00	3.1	2.25	2.2	3.00	3.6	0.88	1.0
	73.0	76	1.4	57	1.0	76	1.6	22	0.5
	3.000	3.00	3.30	2.25	2.4	3.00	3.8	—	—
DN65	76.1	76	1.5	57	1.1	76	1.7		
3	3.500	3.38	4.0	2.50	3.1	3.38	5.3	0.88	1.2
DN80	88.9	86	1.8	64	1.4	86	2.4	22	0.5
	4.250	4.00	5.7	3.00	5.1	4.00	7.5	—	—
	108.0	102	2.6	76	2.3	102	3.4		
4	4.500	4.00	6.7	3.00	5.6	4.00	8.7	1.00	2.4
DN100	114.3	102	3.0	76	2.5	102	3.9	25	1.1
5	5.563	4.88	12.6	3.25	8.3	4.88	15.7	1.00	4.1
	141.3	124	5.7	83	3.8	124	7.1	25	1.9
	5.500	4.88	12.4	3.25	8.2	4.88	15.4	—	—
DN125	139.7	124	5.6	82.6	3.7	124	6.9		
	6.250	5.50	12.6	3.50	9.2	5.50	17.9	—	—
	158.8	140	5.7	89	4.2	140	8.0		
6	6.625	5.50	18.3	3.50	11.7	5.50	22.7	1.00	5.9
DN150	168.3	140	8.3	89	5.3	140	10.3	25	2.7
	6.500	5.43	17.6	3.50	11.4	5.50	22.0	—	—
	165.1	140	7.9	89	5.2	140	9.9		
8	8.625	6.81	25.5	4.25	20.4	6.94	38.7	1.13	12.7
DN200	219.1	173	11.6	108	9.3	176	17.6	29	5.8
	8.515	6.81	23.1	—	—	6.94	33.6	—	—
	216.3	173	10.5	—	—	176	15.2	—	—

 © 2017 Victaulic Company. All rights reserved.

5.0 PERFORMANCE

Flow Data

Size		Frictional Resistance Equivalent of Straight Pipe[1]			
		Elbows		No. 002 Straight Tee	
Nominal Size inches DN	Actual Outside Diameter inches mm	No. 001 90° Elbow feet meters	No. 003 45° Elbow feet meters	Branch feet meters	Run feet meters
1 ¼ DN32	1.660 42.4	— —	— —	— —	— —
1 ½ DN40	1.900 48.3	— —	— —	— —	— —
2 DN50	2.375 60.3	3.5 1.1	1.8 0.5	8.5 2.6	3.5 1.1
2 ½	2.875 73.0	4.3 1.3	2.2 0.7	10.8 3.3	4.3 1.3
DN65	3.000 76.1	4.5 1.4	2.3 0.7	11.0 3.4	4.5 1.4
3 DN80	3.500 88.9	5.0 1.5	2.6 0.8	13.0 4.0	5.0 1.5
	4.250 108.0	6.4 2.0	3.2 0.9	15.3 4.7	6.4 2.0
4 DN100	4.500 114.3	6.8 2.1	3.4 1.0	16.0 4.9	6.8 2.1
5	5.563 141.3	8.5 2.6	4.2 1.3	21.0 6.4	8.5 2.6
DN125	5.500 139.7	8.3 2.5	4.1 1.3	20.6 6.3	8.3 2.5
	6.250 158.8	9.4 2.9	4.9 1.5	25.0 7.6	9.6 2.9
6 DN150	6.625 168.3	10.0 3.0	5.0 1.5	25.0 7.6	10.0 3.0
	6.500 165.1	9.8 3.0	4.9 1.5	24.5 7.5	9.8 3.0
8 DN200	8.625 219.1	13.0 4.0	5.0 1.5	33.0 10.1	13.0 4.0
	8.515 216.3	13.0 4.0	— —	33.0 10.1	13.0 4.0

[1] The flow data listed is based upon the pressure drop of Schedule 40 pipe.

 © 2017 Victaulic Company. All rights reserved.

6.0 NOTIFICATIONS

General Notes

NOTE: When assembling FireLock EZ™ couplings onto end caps, take additional care to make certain the end cap is fully seated against the gasket end stop. For FireLock EZ™ Style 009N/009H couplings, use FireLock™ No. 006 end caps containing the "EZ" marking on the inside face or No. 60 end caps containing the "QV EZ" marking on the inside face. Non-Victaulic end cap products shall not be used with Style 009/009V/009H/009N couplings.

7.0 REFERENCE MATERIALS

10.64: Victaulic® FireLock™ Rigid Coupling Style 009N

10.02: Victaulic® FireLock™ Rigid Coupling Style 005H with Vic-Plus™ Gasket System

29.01: Victaulic® Terms and Conditions of Sale

User Responsibility for Product Selection and Suitability
Each user bears final responsibility for making a determination as to the suitability of Victaulic products for a particular end-use application, in accordance with industry standards and project specifications, and the applicable building codes and related regulations as well as Victaulic performance, maintenance, safety, and warning instructions. Nothing in this or any other document, nor any verbal recommendation, advice, or opinion from any Victaulic employee, shall be deemed to alter, vary, supersede, or waive any provision of Victaulic Company's standard conditions of sale, installation guide, or this disclaimer.

Intellectual Property Rights
No statement contained herein concerning a possible or suggested use of any material, product, service, or design is intended, or should be constructed, to grant any license under any patent or other intellectual property right of Victaulic or any of its subsidiaries or affiliates covering such use or design, or as a recommendation for the use of such material, product, service, or design in the infringement of any patent or other intellectual property right. The terms "Patented" or "Patent Pending" refer to design or utility patents or patent applications for articles and/or methods of use in the United States and/or other countries.

Note
This product shall be manufactured by Victaulic or to Victaulic specifications. All products to be installed in accordance with current Victaulic installation/assembly instructions. Victaulic reserves the right to change product specifications, designs and standard equipment without notice and without incurring obligations.

Installation
Reference should always be made to the Victaulic installation handbook or installation instructions of the product you are installing. Handbooks are included with each shipment of Victaulic products, providing complete installation and assembly data, and are available in PDF format on our website at www.victaulic.com.

Warranty
Refer to the Warranty section of the current Price List or contact Victaulic for details.

Trademarks
Victaulic and all other Victaulic marks are the trademarks or registered trademarks of Victaulic Company, and/or its affiliated entities, in the U.S. and/or other countries.

 © 2017 Victaulic Company. All rights reserved.

FireLock® Butterfly Valve
Series 705 with Weatherproof Actuator

10.81

1.0 PRODUCT DESCRIPTION

- Available Sizes: 2 – 12"/50 – 300 mm
- cULus Listed, LPCB Listed, FM and VdS Approved for service up to 300 psi/2068 kPa /20 bar.
- Designed for fire protection services only.
- Features a weatherproof actuator housing Approved for indoor and outdoor use.
- Actuation options: Hand wheel (2 – 12”/50 – 300 mm)
- Exclusively for use with pipe and Victaulic products which feature ends formed with the Victaulic Original Groove System (OGS) groove profile (see section 7.0 for Reference Materials).

2.0 CERTIFICATION/LISTINGS

c UL us LISTED FM VdS G410001 LPCB 104j/04

NOTES

- Refer to Victaulic submittal publication 10.01 for details

ALWAYS REFER TO ANY NOTIFICATIONS AT THE END OF THIS DOCUMENT REGARDING PRODUCT INSTALLATION, MAINTENANCE OR SUPPORT.

System No.		Location	
Submitted By		Date	

Spec Section		Paragraph	
Approved		Date	

 © 2017 Victaulic Company. All rights reserved.

2.1 CERTIFICATION/LISTINGS

Size	Approval/Listing Service Pressures			
	Series 705 Butterfly Valve			
	cULus	FM	Vds	LPCB
2 50	up to 300psi/2068kPa	n/a	up to 300psi/2068kPa	up to 300psi/2068kPa
2½ 65	up to 300psi/2068kPa	up to 300psi/2068kPa	n/a	up to 300psi/2068kPa
76.1 mm	up to 300psi/2068kPa	up to 300psi/2068kPa	up to 300psi/2068kPa	up to 300psi/2068kPa
3 80	up to 300psi/2068kPa	up to 300psi/2068kPa	up to 300psi/2068kPa	up to 300psi/2068kPa
4 100	up to 300psi/2068kPa	up to 300psi/2068kPa	up to 300psi/2068kPa	up to 300psi/2068kPa
5 125	up to 300psi/2068kPa	up to 300psi/2068kPa	n/a	up to 300psi/2068kPa
139.7 mm	up to 300psi/2068kPa	up to 300psi/2068kPa	up to 300psi/2068kPa	up to 300psi/2068kPa
6 150	up to 300psi/2068kPa	up to 300psi/2068kPa	up to 300psi/2068kPa	up to 300psi/2068kPa
165.1 mm	up to 300psi/2068kPa	up to 300psi/2068kPa	n/a	up to 300psi/2068kPa
8 200	up to 300psi/2068kPa	up to 300psi/2068kPa	up to 300psi/2068kPa	up to 300psi/2068kPa
10 250	up to 300psi/2068kPa	up to 300psi/2068kPa	n/a	up to 300psi/2068kPa
12 300	up to 300psi/2068kPa	up to 300psi/2068kPa	n/a	up to 300psi/2068kPa

3.0 SPECIFICATIONS – MATERIAL

Body: Ductile Iron conforming to ASTM A-536, Grade 65-45-12

End Face, 2 – 6”/50 – 150 mm: Ductile Iron conforming to ASTM A-536, Grade 65-45-12

Seal Retainer, 8 – 12”/200 – 300 mm: Ductile Iron conforming to ASTM A-536, Grade 65-45-12

Body Coating: Black alkyd enamel

Disc: Ductile Iron conforming to ASTM A-536, Grade 65-45-12, with electroless nickel coating conforming to ASTM B-733

Seat: Grade “E” EPDM

Stems: 416 stainless steel conforming to ASTM A-582

Stem Seal Cartridge: C36000 brass

Bearings: Stainless steel with TFE lining

Stem Seals: EPDM

Stem Retaining Ring: Carbon steel

Actuator:

- ☐ 2 – 8"/50 – 200 mm: Brass or bronze traveling nut on a steel lead screw, in a ductile iron housing
- ☐ 10 – 12"/250 – 300 mm: Steel worm and cast iron quadrant gear, in a cast iron housing

 © 2017 Victaulic Company. All rights reserved.

4.0 DIMENSIONS

Series 705

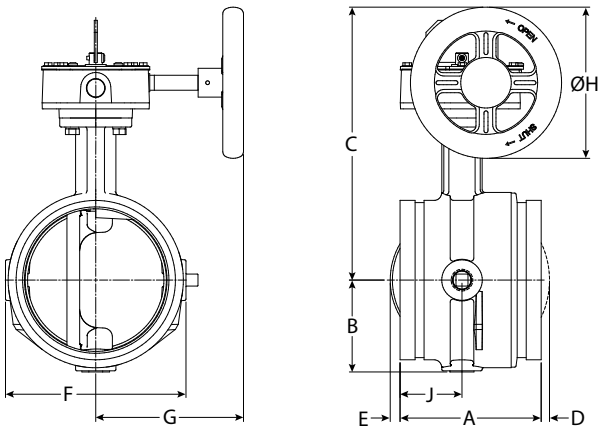

Size		Dimensions								
Nominal inches mm	**Actual Outside Diameter** inches mm	**E to E A** inches mm	**B** inches mm	**C** inches mm	**D** inches mm	**E** inches mm	**F** inches mm	**G** inches mm	**DIA H** inches mm	**J** inches mm
2 60.3	2.375 60.3	4.25 108.0	2.28 57.9	6.41 162.8	–	–	4.00 101.6	4.22 107.2	4.50 114.3	2.12 53.8
2½ 73	2.875 73.0	3.77 95.8	2.28 57.9	7.54 191.5	–	–	4.00 101.6	4.22 107.2	4.50 114.3	1.77 45.0
76.1 mm	3.000 76.1	3.77 95.8	2.28 57.9	7.54 191.5	–	–	4.00 101.6	4.22 107.2	4.50 114.3	1.77 45.0
3 88.9	3.500 88.9	3.77 95.8	2.53 64.3	7.79 197.9	–	–	4.50 114.3	4.22 107.2	4.50 114.3	1.77 45.0
108 mm	4.250 108.0	4.63 117.6	2.88 73.2	8.81 223.8	–	–	5.50 139.7	4.22 107.2	4.50 114.3	2.20 55.9
4 114.3	4.500 114.3	4.63 117.6	2.88 73.2	8.81 223.8	–	–	5.50 139.7	4.22 107.2	4.50 114.3	2.20 55.9
133 mm	5.250 133.0	5.88 149.4	3.35 85.1	10.88 276.4	–	–	6.56 166.6	6.19 157.2	6.30 160.0	2.58 65.5
139.7 mm	5.500 139.7	5.88 149.4	3.35 85.1	10.88 276.4	–	–	6.56 166.6	6.19 157.2	6.30 160.0	2.58 65.6
5 141.3	5.563 141.3	5.88 149.4	3.35 85.1	10.88 276.4	–	–	6.56 166.6	6.19 157.2	6.30 160.0	2.58 65.5
159 mm	6.250 159.0	5.88 149.4	3.84 97.5	11.38 289.1	–	0.41 10.4	7.52 191.0	6.19 157.2	6.30 160.0	2.58 65.5
165.1mm	6.500 165.1	5.88 149.4	3.84 97.5	11.38 289.1	–	0.41 10.4	7.52 191.0	6.19 157.2	6.30 160.0	2.58 65.5
6 168.3	6.625 168.3	5.88 149.4	3.84 97.5	11.38 289.1	–	0.41 10.4	7.52 191.0	6.19 157.2	6.30 160.0	1.90 48.3
8 219.1	8.625 219.1	5.33 135.4	5.07 128.8	13.53 343.6	0.80 20.3	1.47 37.3	10.00 254.0	6.19 157.2	8.10 205.7	2.33 59.2
10 273	10.750 273.0	6.40 162.6	6.37 161.8	15.64 397.3	1.41 35.8	1.81 46.0	12.25 311.2	8.10 205.7	9.00 228.6	–
12 323.9	12.750 323.9	6.50 165.1	7.36 186.9	16.64 422.7	2.30 58.4	2.80 71.1	14.25 362.0	8.10 205.7	9.00 228.6	–

NOTE

- Optional ½"/15 mm tap available. Contact Victaulic for details.

 © 2017 Victaulic Company. All rights reserved.

5.0 PERFORMANCE

Series 705

The chart expresses the frictional resistance of Victaulic Series 705 Butterfly Valve in equivalent feet/meters of straight pipe.

Nominal Size mm inches	Outside Diameter mm inches	Equivalent Feet/m of pipe
2 50	2.375 60.3	6 1.8
2½ 65	2.875 73.0	6 1.8
76.1 mm	3.000 76.1	6 1.8
3 80	3.500 88.9	7 2.1
4 100	4.500 114.3	8 2.4
108 mm	108 mm	8 2.4
5 125	5.563 141.3	12 3.7
133 mm	133 mm	12 3.7
139.7 mm	5.500 139.7	12 3.7
6 150	6.625 168.3	14 4.2
159 mm	159 mm	14 4.3
165.1 mm	6.500 165.1	14 4.2
8 200	8.625 219.1	16 4.9
10 250	10.750 273.0	18 5.5
12 300	12.750 323.9	19 5.8

 © 2017 Victaulic Company. All rights reserved.

5.1 PERFORMANCE

Series 705

C_V values for flow of water at +60°F/+16°C through a fully open valve are shown in the table below.
For additional details, contact Victaulic.

Formulas for C_v values

$$\Delta P = \frac{Q^2}{C_v^2}$$

$$Q = C_v \times \sqrt{\Delta P}$$

Where:
Q = Flow (GPM)
ΔP = Pressure Drop (psi)
C_v = Flow Coefficient

Formulas for K_v values

$$\Delta P = \frac{Q^2}{K_v^2}$$

$$Q = K_v \times \sqrt{\Delta P}$$

Where:
Q = Flow (m^3/hr)
ΔP = Pressure Drop (Bar)
K_v = Flow Coefficient

Valve Size		Full Open
Nominal Size inches mm	**Actual Outside Diameter** inches mm	**Flow Coefficient** C_v
2 50	2.375 60.3	170
2½ 65	2.875 73.0	260
76.1 mm	3.000 76.1	260
3 80	3.500 88.9	440
4 100	4.500 114.3	820
108 mm	108 mm	820
5 125	5.563 141.3	1200
133 mm	133 mm	1200
139.7 mm	5.500 139.7	1200
6 150	6.625 168.3	1800
159 mm	159 mm	1800
165.1 mm	6.500 165.1	1800
8 200	8.625 219.1	3400
10 250	10.750 273.0	5800
12 300	12.750 323.9	9000

Valve Size		Full Open
Nominal Size inches mm	**Actual Outside Diameter** inches mm	**Flow Coefficient** K_v
2 50	2.375 60.3	147
2½ 65	2.875 73.0	225
76.1 mm	3.000 76.1	225
3 80	3.500 88.9	380
4 100	4.500 114.3	710
108 mm	108 mm	710
5 125	5.563 141.3	1040
133 mm	133 mm	1040
139.7 mm	5.500 139.7	1040
6 150	6.625 168.3	1560
159 mm	159 mm	1560
165.1 mm	6.500 165.1	1560
8 200	8.625 219.1	2940
10 250	10.750 273.0	5020
12 300	12.750 323.9	7790

 © 2017 Victaulic Company. All rights reserved.

6.0 NOTIFICATIONS

WARNING

- **Read and understand all instructions before attempting to install, remove, adjust, or maintain any Victaulic piping products.**
- **Depressurize and drain the piping system before attempting to install, remove, adjust, or maintain any Victaulic piping products.**
- **Wear safety glasses, hardhat, and foot protection.**

Failure to follow these instructions could result in death or serious personal injury and property damage.

7.0 REFERENCE MATERIALS

Switch and Wiring

1. The supervisory switch contains two single pole, double throw, pre-wired switches.
2. Switches are rated:

   10 amps @ 125 or 250 VAC/60 Hz

   0.50 amps @ 125 VDC

   0.25 amps @ 250 VDC
3. Switches supervise the valve in the “OPEN” position.
5. One switch has two #18 insulated wires per terminal, which permit complete supervision of leads (refer to diagrams and notes below). The second switch has one #18 insulated wire per terminal. This double circuit provides flexibility to operate two electrical devices at separate locations, such as an indicating light and an audible alarm, in the area that the valve is installed.
6. A #14 insulated ground lead (green) is provided.

   Switch #1 = S1

   For connection to the supervisory circuit of a UL Listed alarm control panel

   Switch #2 = S2

   Auxiliary switch that may be connected to auxiliary devices, per the authority having jurisdiction

S1
- Normally Closed: (2) Blue
- Common: (2) Yellow

S2
- Normally Closed: Blue with Orange Stripe
- Normally Open: Brown with Orange Stripe
- Common: Yellow with Orange Stripe

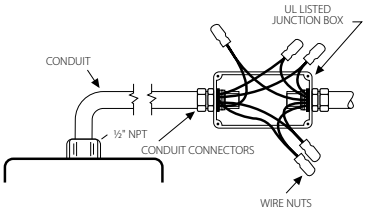

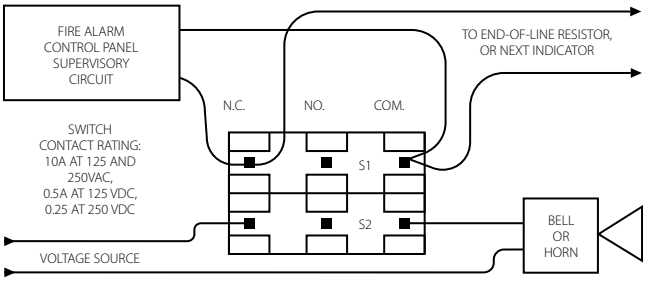

Switch 1: 2 leads per terminal
Switch 2: 1 lead per terminal

NOTES

- The above diagram shows a connection between the common terminal (yellow – S1 and yellow-with-orange stripe – S2) and the normally closed terminal (blue – S1 and blue-with-orange stripe – S2). In this example, the indicator light and alarm will stay on until the valve is fully open. When the valve is fully open, the indicator light and alarm will go out. Cap off any unused wires (e.g. brown with orange stripe).
- Only S1 (two leads per terminal) may be connected to the fire alarm control panel.
- The connection of the alarm switch wiring shall be in accordance with NFPA 72 and the auxiliary switch per NFPA 70 (NEC).

 © 2017 Victaulic Company. All rights reserved.

7.1 REFERENCE MATERIALS

10.01: Regulatory Approval Reference Guide
29.01: Terms and Conditions/Warranty
I-100: Field Installation Handbook

User Responsibility for Product Selection and Suitability
Each user bears final responsibility for making a determination as to the suitability of Victaulic products for a particular end-use application, in accordance with industry standards and project specifications, and the applicable building codes and related regulations as well as Victaulic performance, maintenance, safety, and warning instructions. Nothing in this or any other document, nor any verbal recommendation, advice, or opinion from any Victaulic employee, shall be deemed to alter, vary, supersede, or waive any provision of Victaulic Company's standard conditions of sale, installation guide, or this disclaimer.

Intellectual Property Rights
No statement contained herein concerning a possible or suggested use of any material, product, service, or design is intended, or should be constructed, to grant any license under any patent or other intellectual property right of Victaulic or any of its subsidiaries or affiliates covering such use or design, or as a recommendation for the use of such material, product, service, or design in the infringement of any patent or other intellectual property right. The terms "Patented" or "Patent Pending" refer to design or utility patents or patent applications for articles and/or methods of use in the United States and/or other countries.

Note
This product shall be manufactured by Victaulic or to Victaulic specifications. All products to be installed in accordance with current Victaulic installation/assembly instructions. Victaulic reserves the right to change product specifications, designs and standard equipment without notice and without incurring obligations.

Installation
Reference should always be made to the Victaulic installation handbook or installation instructions of the product you are installing. Handbooks are included with each shipment of Victaulic products, providing complete installation and assembly data, and are available in PDF format on our website at www.victaulic.com.

Warranty
Refer to the Warranty section of the current Price List or contact Victaulic for details.

Trademarks
Victaulic and all other Victaulic marks are the trademarks or registered trademarks of Victaulic Company, and/or its affiliated entities, in the U.S. and/or other countries.

 © 2017 Victaulic Company. All rights reserved.

FireLock® Check Valves

Series 717 Check Valve
Series 717H High Pressure Check Valve

10.08

Series 717
(2½ – 3"/65 – 80 mm)

Series 717
(4 – 12"/100 – 300 mm)

Series 717H
High Pressure Check Valve
(2 – 3"/50 – 80 mm)

1.0 PRODUCT DESCRIPTION

Available Sizes

- 2 – 3"/DN50 – DN80 (Series 717H)
- 2 ½ – 12"/DN50 – DN300 (Series 717)

Pressure Class

- Up to 365 psi/2517 kPa/25 bar
- Working pressure dependent on size of pipe, valve size and approval requirements.

Application

- Designed for use in Fire Protection systems.
- Prevents back flow.
- Single-disc mechanism incorporates a spring-assisted feature for non-slamming operation.
- Can be installed either vertically (flow upwards only) or horizontally.
- Valve body cast with arrow indicator to assist with proper valve orientation.
- Optional upstream and downstream pressure taps included on select sizes. See Section 3.0.
- Provided with grooved ends.
- Rated for ambient temperature use in fire protection systems.

2.0 CERTIFICATION/LISTINGS

NOTE

- Refer to Victaulic submittal publication 10.01 for details

ALWAYS REFER TO ANY NOTIFICATIONS AT THE END OF THIS DOCUMENT REGARDING PRODUCT INSTALLATION, MAINTENANCE OR SUPPORT.

System No.		Location	
Submitted By		Date	

Spec Section		Paragraph	
Approved		Date	

 © 2017 Victaulic Company. All rights reserved.

2.0 CERTIFICATION/LISTINGS (Continued)

Approvals/Listings

Size	Approval/Listing Service Pressures			
	Series 717H			
	cULus	FM	LPCB	Vds
2"/50 mm	365 psi/2517 kPa	365 psi/2517 kPa	365 psi/2517 kPa	365 psi/2517 kPa
2 ½"/65 mm	365 psi/2517 kPa	365 psi/2517 kPa	365 psi/2517 kPa	365 psi/2517 kPa
76.1 mm	365 psi/2517 kPa	365 psi/2517 kPa	365 psi/2517 kPa	365 psi/2517 kPa
3"/80 mm	365 psi/2517 kPa	365 psi/2517 kPa	365 psi/2517 kPa	365 psi/2517 kPa

Size	Approval/Listing Service Pressures			
	Series 717			
	cULus	FM	LPCB	Vds
2 ½"/65 mm	250 psi/1725 kPa	n/a	365 psi/2517 kPa	n/a
76.1 mm	250 psi/1725 kPa	n/a	365 psi/2517 kPa	16bar/232 psi
3"/80 mm	250 psi/1725 kPa	n/a	365 psi/2517 kPa	16bar/232 psi
4"/100 mm	365 psi/2517 kPa	365 psi/2517 kPa	365 psi/2517 kPa	16bar/232 psi
5"/125 mm	365 psi/2517 kPa	365 psi/2517 kPa	365 psi/2517 kPa	n/a
139.7 mm	365 psi/2517 kPa	365 psi/2517 kPa	365 psi/2517 kPa	16bar/232 psi
6"/150 mm	365 psi/2517 kPa	365 psi/2517 kPa	365 psi/2517 kPa	16bar/232 psi
165.1 mm	365 psi/2517 kPa	365 psi/2517 kPa	365 psi/2517 kPa	n/a
8"/200 mm	365 psi/2517 kPa	365 psi/2517 kPa	348 psi/2400 kPa	16bar/232 psi
10"/250 mm	250 psi/1725 kPa	250 psi/1725 kPa	1725 kPa/250 psi	n/a
12"/300 mm	250 psi/1725 kPa	250 psi/1725 kPa	1725 kPa/250 psi	n/a

 © 2017 Victaulic Company. All rights reserved.

3.0 SPECIFICATIONS – MATERIAL

Body:

- ☐ Ductile Iron conforming to ASTM A-536, Grade 65-45-12.

Body Coating:

- ☐ Series 717H Body: Black Paint
- ☐ Series 717H Endface: Electroless Nickel conforming to ASTM B-733
- ☐ Series 717 (2 ½ – 3"/DN65 – DN80): PPS Coating
- ☐ Series 717 (4 – 12"/DN100 – DN300): Black Paint

Body Seat:

- ☐ Series 717H: Nitrile O-ring installed into an Electroless Nickel plating conforming to ASTM B-733
- ☐ Series 717 (2 ½" – 3"/DN65 – DN80): PPS Coated Ductile Iron
- ☐ Series 717 (4 – 12"/DN100 – DN300): Ductile Iron with Electroless Nickel plating conforming to ASTM B-733

Disc Seal or Coating: (specify choice[1])

- ☐ **Nitrile (Series 717H only)**
- ☐ **EPDM**
  NOT COMPATIBLE FOR PETROLEUM SERVICES.

Discs:

- ☐ Series 717H: CF8M Cast Stainless Steel
- ☐ Series 717 (2 ½ – 3"/DN65 – DN80): Aluminum bronze with elastomer seal
- ☐ Series 717 (4 – 12"/DN100 – DN300): Elastomer encapsulated disc.

Shaft:

- ☐ Series 717H: Brass
- ☐ Series 717 (2 ½ – 3"/DN65 – DN80): Type 416 Stainless Steel
- ☐ Series 717 (4 – 12"/DN100 – DN300): Type 316 Stainless Steel

Spring:

- ☐ Type 302/304 Stainless Steel

Shaft Plug:

- ☐ Series 717H: Carbon Steel Zinc Plated
- ☐ Series 717: Carbon Steel Zinc Plated

Pipe Plug:

- ☐ Series 717H: Carbon Steel Zinc Plated
- ☐ Series 717: Carbon Steel Zinc Plated

Optional Pressure Taps:

- ☐ Series 717H: Available on all sizes
- ☐ Series 717: Available on sizes 4 – 12"/DN100 – DN300

 © 2017 Victaulic Company. All rights reserved.

4.0 DIMENSIONS

Series 717

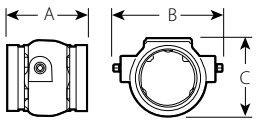

Typical 2 ½ – 3"/65 – 80 mm

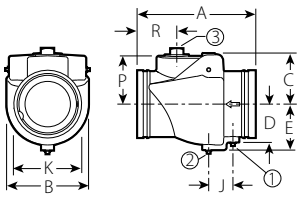

① ½" NPT Upstream Drain
② ½" NPT Downstream Drain
③ 2" NPT (Drain Optional)

Typical 4 – 8"/100 – 200 mm

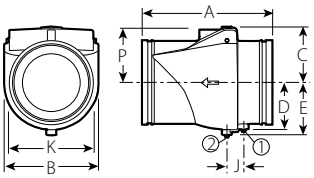

① ½" NPT Upstream Drain
② ½" NPT Downstream Drain

Typical 10 – 12"/250 – 300 mm

Size		Dimensions									Weight
Nominal inches mm	**Actual Outside Diameter** inches mm	**E to E A** inches mm	**B** inches mm	**C** inches mm	**D** inches mm	**E** inches mm	**J** inches mm	**K** inches mm	**P** inches mm	**R** inches mm	**Approximate (Each)** lb kg
2 ½ 65	2.875 73.0	3.88 99	4.26 108	3.57 91	–	–	–	–	–	–	3.6 1.6
76.1 mm	3.000 76.1	3.88 99	4.26 108	3.57 91	–	–	–	–	–	–	3.6 1.6
3 80	3.500 88.9	4.25 108	5.06 129	4.17 106	–	–	–	–	–	–	4.5 2.0
4 100	4.500 114.3	9.63 245	6.00 152	3.88 99	2.75 70	3.50 89	2.00 51	4.50 114	3.50 89	3.35 85	20.0 9.1
5 125	5.563 141.3	10.50 267	6.80 173	4.50 114	–	4.17 106	2.15 55	5.88 149	4.08 104	3.98 101	27.0 12.3
139.7 mm	5.500 139.7	10.50 267	6.80 173	4.50 114	–	4.17 106	2.15 55	5.88 149	4.08 104	3.98 101	27.0 12.3
6 150	6.625 168.3	11.50 292	8.00 203	5.00 127	–	4.50 114	2.38 61	6.67 169	4.73 120	3.89 99	38.0 17.2
165.1 mm	6.500 165.1	11.50 292	8.00 203	5.00 127	–	4.50 114	2.38 61	6.67 169	4.73 120	3.89 99	38.0 17.2
8 200	8.625 219.1	14.00 356	9.88 251	6.06 154	5.05 128	5.65 144	2.15 55	8.85 225	5.65 144	5.75 146	64.0 29.0
10 250	10.750 273.0	17.00 432	12.00 305	7.09 180	5.96 151	6.69 170	2.15 55	10.92 277	6.73 171	–	100.0 45.4
12 300	12.750 323.9	19.50 495	14.00 356	8.06 205	6.91 176	7.64 194	2.51 64	12.81 925	7.73 196	–	140.0 63.5

 © 2017 Victaulic Company. All rights reserved.

4.1 DIMENSIONS

Series 717H

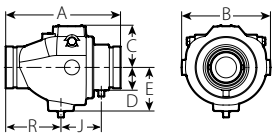

Typical 2"/50 mm – 3"/80 mm

Size	Dimensions									Weight
Nominal inches mm	**E to E A** inches mm	**B** inches mm	**C** inches mm	**D** inches mm	**E** inches mm	**J** inches mm	**K** inches mm	**P** inches mm	**R** inches mm	**Approximate (Each)** lb kg
2 50	8.66 219.8	6.46 164.1	3.23 82.1	1.48 37.5	3.02 76.7	2.80 71.0	–	–	4.25 108.0	10.7 4.9
2 ½ 65	9.37 238.0	6.94 176.3	3.31 84.1	1.66 42.2	3.40 86.4	3.38 85.9	–	–	4.38 111.3	13.8 6.3
76.1 mm	9.37 238.0	6.94 176.3	3.31 84.1	1.66 42.2	3.40 86.4	3.38 85.9	–	–	4.38 111.3	13.8 6.3
3 80	9.62 244.3	7.44 189.0	3.53 89.7	1.91 48.5	3.65 92.7	3.38 85.9	–	–	4.63 117.6	20.0 9.1

 © 2017 Victaulic Company. All rights reserved.

5.0 PERFORMANCE

Flow Characteristics

The charts below express the flow of water at 60°F/16°C through valve.

S717H / 717HR

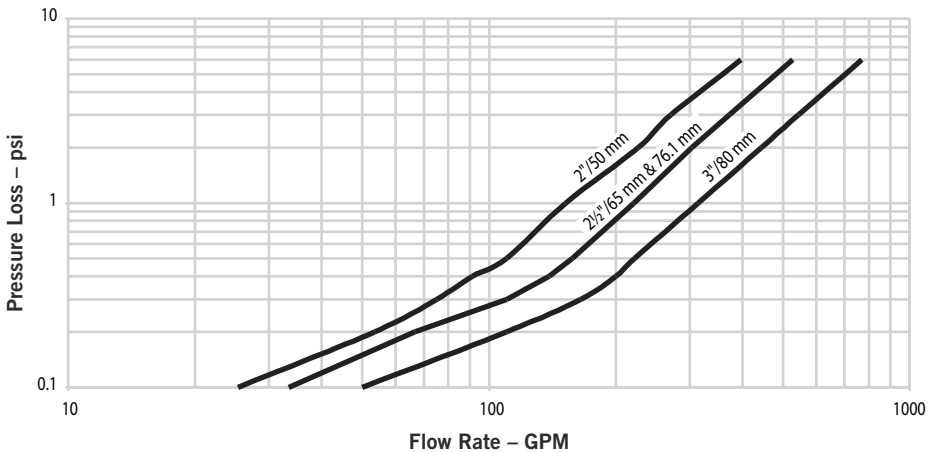

S717H / 717HR

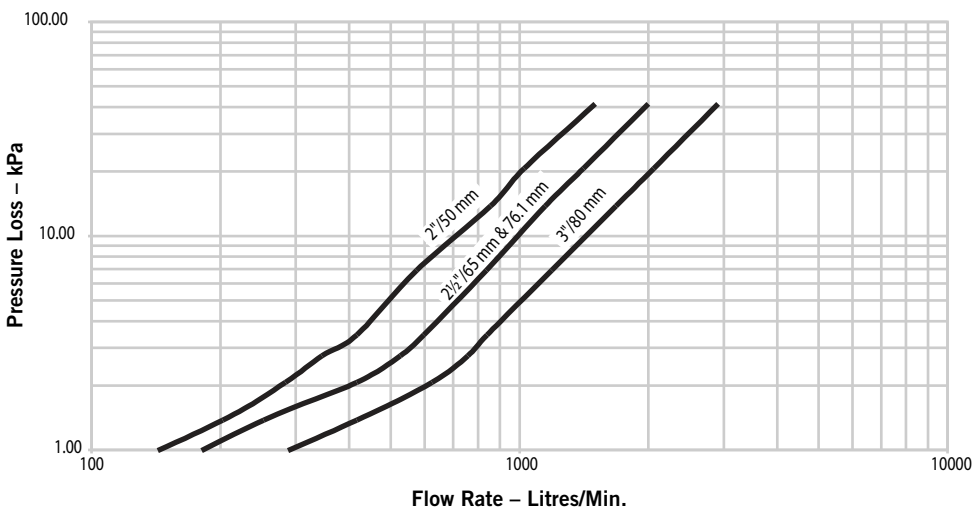

 © 2017 Victaulic Company. All rights reserved.

5.1 PERFORMANCE

Flow Characteristics

The charts below express the flow of water at 60°F/16°C through valve.

S717 / 717R

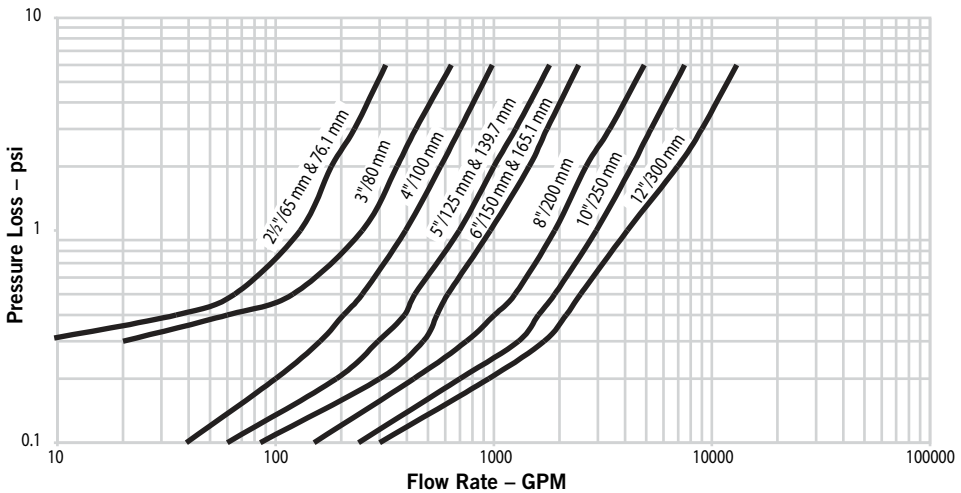

S717 / 717R

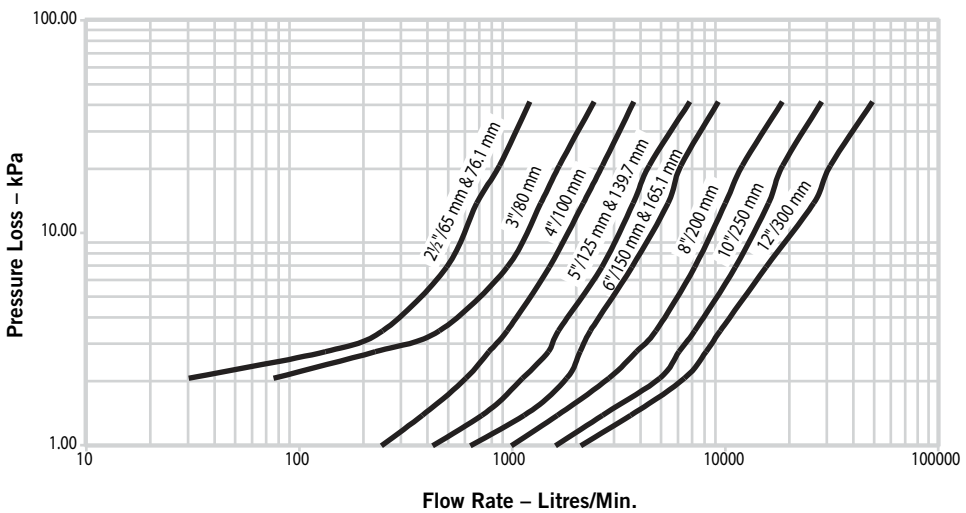

 © 2017 Victaulic Company. All rights reserved.

6.0 NOTIFICATIONS

WARNING

- **Depressurize and drain the piping system before attempting to install, remove, adjust, or maintain any Victaulic piping products.**

7.0 REFERENCE MATERIALS

05.01: Seal Selection Guide
10.01: Regulatory Approval Reference Guide
29.01: Terms and Conditions/Warranty
I-100: Field Installation Handbook

User Responsibility for Product Selection and Suitability
Each user bears final responsibility for making a determination as to the suitability of Victaulic products for a particular end-use application, in accordance with industry standards and project specifications, as well as Victaulic performance, maintenance, safety, and warning instructions. Nothing in this or any other document, nor any verbal recommendation, advice, or opinion from any Victaulic employee, shall be deemed to alter, vary, supersede, or waive any provision of Victaulic Company's standard conditions of sale, installation guide, or this disclaimer.

Intellectual Property Rights
No statement contained herein concerning a possible or suggested use of any material, product, service, or design is intended, or should be constructed, to grant any license under any patent or other intellectual property right of Victaulic or any of its subsidiaries or affiliates covering such use or design, or as a recommendation for the use of such material, product, service, or design in the infringement of any patent or other intellectual property right. The terms "Patented" or "Patent Pending" refer to design or utility patents or patent applications for articles and/or methods of use in the United States and/or other countries.

Note
This product shall be manufactured by Victaulic or to Victaulic specifications. All products to be installed in accordance with current Victaulic installation/assembly instructions. Victaulic reserves the right to change product specifications, designs and standard equipment without notice and without incurring obligations.

Installation
Reference should always be made to the Victaulic installation handbook or installation instructions of the product you are installing. Handbooks are included with each shipment of Victaulic products, providing complete installation and assembly data, and are available in PDF format on our website at www.victaulic.com.

Warranty
Refer to the Warranty section of the current Price List or contact Victaulic for details.

Trademarks
Victaulic and all other Victaulic marks are the trademarks or registered trademarks of Victaulic Company, and/or its affiliated entities, in the U.S. and/or other countries.

 © 2017 Victaulic Company. All rights reserved.

21016

CITY OF MADERA

INSPECTION RECORD CARD
PERMIT NO.: 20220067

JOB ADDRESS: **325 SOUTH SCHNOOR AVENUE**
OWNER: FRANCO DEVELOPMENT PROP LP
CONTRACTOR: SAN JOAQUIN FIRE PROTECTION
DESCRIPTION OF WORK: COMMERCIAL FIRE SPRINKLERS

BLD. "A"

PLEASE USE THE INSPECTION REQUEST LINE (559) 661-5445

INSPECTIONS MUST BE RECEIVED 24 HOURS IN ADVANCE. JOB SITE MUST BE READY FOR INSPECTION BEFORE 8 AM THE DAY OF THE INSPECTION

NOTE: INSPECTOR'S SIGNATURE AFTER AN ITEM DESIGNATES APPROVAL.

TO BE MADE BEFORE CONCRETE IS POURED

INSPECTION ITEM	APPROVAL	DATE	INSPECTION ITEM	APPROVAL	DATE
ROUGH PLUMBING - WATER			FOUNDATION FORMS		
ROUGH PLUMBING - WASTE			ZONING SETBACKS		
FOUNDATION STEEL			UFFER LOCATION		
SHEAR WALL HOLD DOWNS			OTHER Pre-Pipe	JK	4/20/22
BRACED WALL PANELS			OTHER		

TO BE MADE BEFORE SUBFLOOR IS INSTALLED

INSPECTION ITEM	APPROVAL	DATE	INSPECTION ITEM	APPROVAL	DATE
JOISTS & SILLS			ROUGH PLUMBING		
DIAPHRAM NAILING			ROUGH GAS		
SUB-FLOOR INSULATION (BATTS)			OTHER Hydro/H&B	SR	7/28/22

TO BE MADE BEFORE INSULATION IS INSTALLED

INSPECTION ITEM	APPROVAL	DATE	INSPECTION ITEM	APPROVAL	DATE
ROUGH PLUMBING (VENTS)			ROUGH WIRING (CIRCUITS)		
ROUGH PLUMBING (GAS PIPING)			ROUGH WIRING (SERVICE ENTR)		
ROUGH PLUMBING (WATER PIPING)			FRAMING		
TUB TRAPS			ROOF DECK NAILING		
MECHANICAL DUCTS			ROOF FELT & BATT		
STUCCO LATH			FIREPLACE (CHIMNEY)		
SHEAR WALL NAILING			HOLD DOWN NAILING		
OTHER			OTHER		

TO BE MADE AFTERINSULATION HAS BEEN INSTALLED

INSPECTION ITEM	APPROVAL	DATE	INSPECTION ITEM	APPROVAL	DATE
WALL INSULATION			SHEET ROCK NAILING		
CEILING INSULATION (BATTS)			SHOWER PAN & WALLS		
CEILING INSULATION (BLOWN)			OTHER		

TO BE MADE BEFORE ELECTRIC & GAS METERS ARE SET

GAS PRESSURE TEST		ELECTRIC METER APPROVAL	
GAS METER APPROVAL		GROUNDING ELECTRODE/CLAMP	

MASONRY, CONCRETE & REINFORCEMENT INSPECTIONS

TO BE MADE BEFORE CONCRETE IS POURED

INSPECTION ITEM	APPROVAL	DATE	INSPECTION ITEM	APPROVAL	DATE
REINFORCING			CELLS		
REINFORCING			BOND BEAM		
OTHERWALLS			OTHER		

FINAL INSPECTIONS

INSPECTION ITEM	APPROVAL	DATE	INSPECTION ITEM	APPROVAL	DATE
BUILDING FINAL			HOUSE TO SEWER LATERAL		
PLUMBING FINAL			HOUSE TO WATER SERVICE		
ELECTRICAL FINAL			SEWER SERVICE/CITY CLEANOUT		
MECHANICAL FINAL			SITE OR OTHER		
WATER METER			OTHER		

DO NOT OCCUPY BUILDING UNTIL OCCUPANCY APPROVED.

WHEN SIGNED BY A BUILDING INSPECTOR THIS DOCUMENT BECOMES THE CERTIFICATE OF OCCUPANCY

FINAL OCCUPANCY APPROVAL DATE: 4/11/23 **BY:** MVC

COMMUNITY DEVELOPMENT DEPARTMENT / BUILDING DEPARTMENT
205 W. 4TH ST, MADERA, CA 93637 - PHONE (559) 661-5440

21016

CITY OF MADERA

INSPECTION RECORD CARD
PERMIT NO.: 20220068

JOB ADDRESS: **345 SOUTH SCHNOOR AVENUE**
OWNER: FRANCO DEVELOPMENT PROP LP
CONTRACTOR: SAN JOAQUIN FIRE PROTECTION
DESCRIPTION OF WORK: COMMERCIAL FIRE SPRINKLERS

BLD. "B"

PLEASE USE THE INSPECTION REQUEST LINE (559) 661-5445

INSPECTIONS MUST BE RECEIVED 24 HOURS IN ADVANCE. JOB SITE MUST BE READY FOR INSPECTION BEFORE 8 AM THE DAY OF THE INSPECTION

NOTE: INSPECTOR'S SIGNATURE AFTER AN ITEM DESIGNATES APPROVAL.

TO BE MADE BEFORE CONCRETE IS POURED

INSPECTION ITEM	APPROVAL	DATE	INSPECTION ITEM	APPROVAL	DATE
ROUGH PLUMBING - WATER			FOUNDATION FORMS		
ROUGH PLUMBING - WASTE			ZONING SETBACKS		
FOUNDATION STEEL			UFFER LOCATION		
SHEAR WALL HOLD DOWNS			OTHER		
BRACED WALL PANELS			OTHER Pre-Pipe	JR	7/20/22

TO BE MADE BEFORE SUBFLOOR IS INSTALLED

INSPECTION ITEM	APPROVAL	DATE	INSPECTION ITEM	APPROVAL	DATE
JOISTS & SILLS			ROUGH PLUMBING		
DIAPHRAM NAILING			ROUGH GAS		
SUB-FLOOR INSULATION (BATTS)			OTHER Hydro/HHB	JR	7/28/22

TO BE MADE BEFORE INSULATION IS INSTALLED

INSPECTION ITEM	APPROVAL	DATE	INSPECTION ITEM	APPROVAL	DATE
ROUGH PLUMBING (VENTS)			ROUGH WIRING (CIRCUITS)		
ROUGH PLUMBING (GAS PIPING)			ROUGH WIRING (SERVICE ENTR)		
ROUGH PLUMBING (WATER PIPING)			FRAMING		
TUB TRAPS			ROOF DECK NAILING		
MECHANICAL DUCTS			ROOF FELT & BATT		
STUCCO LATH			FIREPLACE (CHIMNEY)		
SHEAR WALL NAILING			HOLD DOWN NAILING		
OTHER			OTHER		

TO BE MADE AFTERINSULATION HAS BEEN INSTALLED

INSPECTION ITEM	APPROVAL	DATE	INSPECTION ITEM	APPROVAL	DATE
WALL INSULATION			SHEET ROCK NAILING		
CEILING INSULATION (BATTS)			SHOWER PAN & WALLS		
CEILING INSULATION (BLOWN)			OTHER		

TO BE MADE BEFORE ELECTRIC & GAS METERS ARE SET

GAS PRESSURE TEST			ELECTRIC METER APPROVAL		
GAS METER APPROVAL			GROUNDING ELECTRODE/CLAMP		

MASONRY, CONCRETE & REINFORCEMENT INSPECTIONS

TO BE MADE BEFORE CONCRETE IS POURED

INSPECTION ITEM	APPROVAL	DATE	INSPECTION ITEM	APPROVAL	DATE
REINFORCING			CELLS		
REINFORCING			BOND BEAM		
OTHERWALLS			OTHER		

FINAL INSPECTIONS

INSPECTION ITEM	APPROVAL	DATE	INSPECTION ITEM	APPROVAL	DATE
BUILDING FINAL			HOUSE TO SEWER LATERAL		
PLUMBING FINAL			HOUSE TO WATER SERVICE		
ELECTRICAL FINAL			SEWER SERVICE/CITY CLEANOUT		
MECHANICAL FINAL			SITE OR OTHER		
WATER METER			OTHER		

DO NOT OCCUPY BUILDING UNTIL OCCUPANCY APPROVED.

WHEN SIGNED BY A BUILDING INSPECTOR THIS DOCUMENT BECOMES THE CERTIFICATE OF OCCUPANCY

FINAL OCCUPANCY APPROVAL DATE: 2/11/23 **BY:** JNT

COMMUNITY DEVELOPMENT DEPARTMENT - BUILDING DEPARTMENT
205 W. 4TH ST, MADERA, CA 93637 - PHONE (559) 661-5440

21016

CITY OF MADERA

INSPECTION RECORD CARD
PERMIT NO.: 20220069

JOB ADDRESS: **335 SOUTH SCHNOOR AVENUE**
OWNER: FRANCO DEVELOPMENT PROP LP
CONTRACTOR: SAN JOAQUIN FIRE PROTECTION
DESCRIPTION OF WORK: COMMERCIAL FIRE SPRINKLERS

BLD. "C"

PLEASE USE THE INSPECTION REQUEST LINE (559) 661-5445

INSPECTIONS MUST BE RECEIVED 24 HOURS IN ADVANCE. JOB SITE MUST BE READY FOR INSPECTION BEFORE 8 AM THE DAY OF THE INSPECTION

NOTE: INSPECTOR'S SIGNATURE AFTER AN ITEM DESIGNATES APPROVAL.

TO BE MADE BEFORE CONCRETE IS POURED

INSPECTION ITEM	APPROVAL	DATE	INSPECTION ITEM	APPROVAL	DATE
ROUGH PLUMBING - WATER			FOUNDATION FORMS		
ROUGH PLUMBING - WASTE			ZONING SETBACKS		
FOUNDATION STEEL			UFFER LOCATION		
SHEAR WALL HOLD DOWNS			OTHER		
BRACED WALL PANELS			OTHER		

TO BE MADE BEFORE SUBFLOOR IS INSTALLED

INSPECTION ITEM	APPROVAL	DATE	INSPECTION ITEM	APPROVAL	DATE
JOISTS & SILLS			ROUGH PLUMBING		
DIAPHRAM NAILING			ROUGH GAS		
SUB-FLOOR INSULATION (BATTS)			OTHER Hydro / HJB	SR	7/28/22

TO BE MADE BEFORE INSULATION IS INSTALLED

INSPECTION ITEM	APPROVAL	DATE	INSPECTION ITEM	APPROVAL	DATE
ROUGH PLUMBING (VENTS)			ROUGH WIRING (CIRCUITS)		
ROUGH PLUMBING (GAS PIPING)			ROUGH WIRING (SERVICE ENTR)		
ROUGH PLUMBING (WATER PIPING)			FRAMING		
TUB TRAPS			ROOF DECK NAILING		
MECHANICAL DUCTS			ROOF FELT & BATT		
STUCCO LATH			FIREPLACE (CHIMNEY)		
SHEAR WALL NAILING			HOLD DOWN NAILING		
OTHER			OTHER Pre-Pipe	SR	7/28/22

TO BE MADE AFTERINSULATION HAS BEEN INSTALLED

INSPECTION ITEM	APPROVAL	DATE	INSPECTION ITEM	APPROVAL	DATE
WALL INSULATION			SHEET ROCK NAILING		
CEILING INSULATION (BATTS)			SHOWER PAN & WALLS		
CEILING INSULATION (BLOWN)			OTHER		

TO BE MADE BEFORE ELECTRIC & GAS METERS ARE SET

GAS PRESSURE TEST		ELECTRIC METER APPROVAL	
GAS METER APPROVAL		GROUNDING ELECTRODE/CLAMP	

MASONRY, CONCRETE & REINFORCEMENT INSPECTIONS

TO BE MADE BEFORE CONCRETE IS POURED

INSPECTION ITEM	APPROVAL	DATE	INSPECTION ITEM	APPROVAL	DATE
REINFORCING			CELLS		
REINFORCING			BOND BEAM		
OTHERWALLS			OTHER		

FINAL INSPECTIONS

INSPECTION ITEM	APPROVAL	DATE	INSPECTION ITEM	APPROVAL	DATE
BUILDING FINAL			HOUSE TO SEWER LATERAL		
PLUMBING FINAL			HOUSE TO WATER SERVICE		
ELECTRICAL FINAL			SEWER SERVICE/CITY CLEANOUT		
MECHANICAL FINAL			SITE OR OTHER		
WATER METER			OTHER		

DO NOT OCCUPY BUILDING UNTIL OCCUPANCY APPROVED.

WHEN SIGNED BY A BUILDING INSPECTOR THIS DOCUMENT BECOMES THE CERTIFICATE OF OCCUPANCY

FINAL OCCUPANCY APPROVAL DATE: 4/11/23 **BY:** MM

COMMUNITY DEVELOPMENT DEPARTMENT - BUILDING DEPARTMENT
205 W. 4TH ST, MADERA, CA 93637 - PHONE (559) 661-5440

21016

CITY OF MADERA

INSPECTION RECORD CARD
PERMIT NO.: 20220070

JOB ADDRESS: **355 SOUTH SCHNOOR AVENUE**
OWNER: FRANCO DEVELOPMENT PROP LP
CONTRACTOR: SAN JOAQUIN FIRE PROTECTION
DESCRIPTION OF WORK: COMMERCIAL FIRE SPRINKLERS

BLD. "D"

PLEASE USE THE INSPECTION REQUEST LINE (559) 661-5445

INSPECTIONS MUST BE RECEIVED 24 HOURS IN ADVANCE. JOB SITE MUST BE READY FOR INSPECTION BEFORE 8 AM THE DAY OF THE INSPECTION

NOTE: INSPECTOR'S SIGNATURE AFTER AN ITEM DESIGNATES APPROVAL.

TO BE MADE BEFORE CONCRETE IS POURED

INSPECTION ITEM	APPROVAL	DATE	INSPECTION ITEM	APPROVAL	DATE
ROUGH PLUMBING - WATER			FOUNDATION FORMS		
ROUGH PLUMBING - WASTE			ZONING SETBACKS		
FOUNDATION STEEL			UFFER LOCATION		
SHEAR WALL HOLD DOWNS			OTHER Pre-Pipe	SR	8/8/22
BRACED WALL PANELS			OTHER		

TO BE MADE BEFORE SUBFLOOR IS INSTALLED

INSPECTION ITEM	APPROVAL	DATE	INSPECTION ITEM	APPROVAL	DATE
JOISTS & SILLS			ROUGH PLUMBING		
DIAPHRAM NAILING			ROUGH GAS		
SUB-FLOOR INSULATION (BATTS)			OTHER Rough/Hydro	SR	8/18/22

TO BE MADE BEFORE INSULATION IS INSTALLED

INSPECTION ITEM	APPROVAL	DATE	INSPECTION ITEM	APPROVAL	DATE
ROUGH PLUMBING (VENTS)			ROUGH WIRING (CIRCUITS)		
ROUGH PLUMBING (GAS PIPING)			ROUGH WIRING (SERVICE ENTR)		
ROUGH PLUMBING (WATER PIPING)			FRAMING		
TUB TRAPS			ROOF DECK NAILING		
MECHANICAL DUCTS			ROOF FELT & BATT		
STUCCO LATH			FIREPLACE (CHIMNEY)		
SHEAR WALL NAILING			HOLD DOWN NAILING		
OTHER			OTHER		

TO BE MADE AFTERINSULATION HAS BEEN INSTALLED

INSPECTION ITEM	APPROVAL	DATE	INSPECTION ITEM	APPROVAL	DATE
WALL INSULATION			SHEET ROCK NAILING		
CEILING INSULATION (BATTS)			SHOWER PAN & WALLS		
CEILING INSULATION (BLOWN)			OTHER		

TO BE MADE BEFORE ELECTRIC & GAS METERS ARE SET

GAS PRESSURE TEST		ELECTRIC METER APPROVAL	
GAS METER APPROVAL		GROUNDING ELECTRODE/CLAMP	

MASONRY, CONCRETE & REINFORCEMENT INSPECTIONS

TO BE MADE BEFORE CONCRETE IS POURED

INSPECTION ITEM	APPROVAL	DATE	INSPECTION ITEM	APPROVAL	DATE
REINFORCING			CELLS		
REINFORCING			BOND BEAM		
OTHERWALLS			OTHER		

FINAL INSPECTIONS

INSPECTION ITEM	APPROVAL	DATE	INSPECTION ITEM	APPROVAL	DATE
BUILDING FINAL			HOUSE TO SEWER LATERAL		
PLUMBING FINAL			HOUSE TO WATER SERVICE		
ELECTRICAL FINAL			SEWER SERVICE/CITY CLEANOUT		
MECHANICAL FINAL			SITE OR OTHER		
WATER METER			OTHER		

DO NOT OCCUPY BUILDING UNTIL OCCUPANCY APPROVED.

WHEN SIGNED BY A BUILDING INSPECTOR THIS DOCUMENT BECOMES THE CERTIFICATE OF OCCUPANCY

FINAL OCCUPANCY APPROVAL DATE: 4/11/23 **BY:** MAS

COMMUNITY DEVELOPMENT DEPARTMENT - BUILDING DEPARTMENT
205 W. 4TH ST, MADERA, CA 93637 - PHONE (559) 661-5440

Automatic Sprinkler Systems

Contractor's Material and Test Certificate for Aboveground Piping

PROCEDURE

Upon completion of work, inspection and tests shall be made by the contractor's representative and witnessed by an owner's representative. All defects shall be corrected and system left in service before contractor's personnel finally leave the job.

A certificate shall be filled out and signed by both representatives. Copies shall be prepared for approving authorities, owners, and contractor. It is understood the owner's representative's signature in no way prejudices any claim against contractor for faulty material, poor workmanship, or failure to comply with approving authority's requirements or local ordinances.

Property Name: MADERA INDUSTRIAL WAREHOUSE BLDG. A **Date:** 4/11/23

Property Address: 325 S. SCHNOOR AVE., MADERA, CA. 93637

Plans	Accepted by approving authorities (names) CITY OF MADERA		
	Address 205 W. FORTH STREET, MADERA, CA. 93637		
	Installation conforms to accepted plans	☒ Yes	☐ No
	Equipment used is approved. If no, explain deviations	☒ Yes	☐ No
Instructions	Has person in charge of fire equipment been instructed as to location of control valves and care and maintenance of this new equipment?	☒ Yes	☐ No
	If no, explain		
	Have copies of the following been left on the premises?	☒ Yes	☐ No
	1. System components instructions	☒ Yes	☐ No
	2. Care and maintenance instructions	☒ Yes	☐ No
	3. NFPA 25	☒ Yes	☐ No
Location of system	Supplies buildings BUILDING A		

Sprinklers

Make	Model	Year of manufacture	Orifice size	Quantity	Temperature rating
VICTAULIC	V3401	2021	¾"	304	200
VICTAULIC	V3401	2021	¾"	38	155

Pipe and fittings

Type of pipe SHC. 40 THREADED & SCH. 10 GROOVED

Type of fittings D.I. THREADED AND GROOVED FITTINGS

	Alarm device			Maximum time to operate through test connection	
Alarm valve or flow indicator	**Type**	**Make**	**Model**	**Minutes**	**Seconds**
	FLOW SWITCH	POTTER	VSR-4	0	40

Dry pipe operating test

Dry valve					Q.O.D				
Make			**Model**	**Serial No.**	**Make**	**Model**		**Serial No.**	
	Time to trip through test connection[1,2]		**Water pressure**	**Air pressure**	**Trip point air pressure**	**Time water reached test outlet[1,2]**		**Alarm operated properly**	
	Minutes	**Seconds**	**psi**	**psi**	**psi**	**min.**	**sec.**	**Yes**	**No**
Without Q.O.D								☐	☐
With Q.O.D								☐	☐

If no explain: _____

Deluge and preaction valves

Operation ☐ Pneumatic ☐ Electric ☐ Hydraulic

Piping supervised ☐ Yes ☐ No Detecting media supervised ☐ Yes ☐ No

Does valve operate from the manual trip, remote, or both control ☐ Yes ☐ No

Is there an accessible facility in each circuit for testing? ☐ Yes ☐ No

If no, explain _____

Make _____ Model _____

Does each circuit operate supervision loss alarm? ☐ Yes ☐ No

Does each circuit operate valve release? ☐ Yes ☐ No

Maximum time to operate release _____ Minutes _____ Seconds

Pressure reducing valve test

Location and floor _____	Static pressure		Residual pressure (flowing)		Flow rate
Make and model _____	Inlet (psi)	Outlet (psi)	Inlet (psi)	Outlet (psi)	Flow (gpm)
Setting _____					

Test description

Hydrostatic: Hydrostatic tests shall be made at not less than 200 psi (13.6 bar) for 2 hours or 50 psi (3.4 bar) above static pressure excess of 150 psi (10.2 bar) for 2 hours. Differential dry-pipe clappers shall be left open during the test to prevent damage. All aboveground piping leakage shall be stopped.

Pneumatic: Establish 40 psi (2.7 bar) air pressure and measure drop, which shall not exceed 1½ psi (0.1 bar) in 24 hours. Test pressure tanks at normal water level and air pressure and measure air pressure drop, which shall not exceed 1½ psi (0.1 bar) in 24 hours.

[1] Measured from time inspector's test connection is opened
[2] NFPA 13 only requires the 60-second limitation in specific sections

Tests	All piping hydrostatically tested at (200 bar) for 2 hours If no, state reason _____ Dry piping pneumatically ☐ Yes ☐ No Equipment operates ☐ Yes ☐ No		
	Do you certify as the sprinkler contractor that additives and corrosive chemicals, sodium silicate or derivatives of sodium silicate, brine, or other corrosive chemicals were not used for testing systems or stopping leaks?	☒ Yes	☐ No
	Drain test: Reading of cutoff gauge located near water supply test connection: 45 psi (_____ bar) Residual pressure with valve in test connection open wide: 40 psi (_____ bar) Underground mains and lead-in connections to system risers flushed before connection made to sprinkler piping Verified by copy of the Contractor's Material and Test Certificate for Underground Piping ☐ Yes ☐ No ☒ Other Explain: Flushed by installer of underground sprinkler piping	☒ Yes	☐ No
	If powder-driven fasteners are used in concrete, has representative sample testing been satisfactorily completed? If no, explain _____	☒ Yes	☐ No
Blank testing gaskets	Number used: 1 / Locations: BASE OF RISER / Number removed: 1		
Welding	Welding piping ☒ Yes ☐ No If yes . . .		
	Do you certify as the sprinkler contractor that welding procedures used complied with the minimum requirements of AWS B2.1, ASME Section IX *Welding and Brazing Qualifications*, or other applicable qualification standard as required by the AHJ?	☒ Yes	☐ No
	Do you certify that the welding was performed by welders or welding operators qualified in accordance with the minimum requirements of AWS B2.1, ASME section IX *Welding and Brazing Qualifications*, or other applicable qualification standard as required by the AHJ?	☒ Yes	☐ No
	Do you certify that the welding was conducted in compliance with a documented quality control procedure to ensure that (1) all discs are retrieved; (2) that openings in piping are smooth, that slag and other welding residue are removed; (3) the internal diameters of piping are not penetrated; (4) completed welds are free from cracks, incomplete fusion, surface porosity greater than $^{1}/_{16}$ in. diameter, undercut deeper than the lesser of 25% of the wall thickness or $^{1}/_{32}$ in.; and (5) completed circumferential butt weld reinforcement does not exceed $^{3}/_{32}$ in.?	☒ Yes	☐ No
Cutouts (discs)	Do you certify that you have a control feature to ensure that all cutouts (discs) are retrieved?	☒ Yes	☐ No
Hydraulic data nameplate	Nameplate provided If no, explain	☒ Yes	☐ No
Remarks	Date left in service with all control valves open 4/11/23		

Form 4

Signatures	Name of sprinkler contractor SAN JOAQUIN FIRE PROTECTION, INC.		
	Tests witnessed by		
	The property owner or their authorized agent (signed)	Title	Date
	For sprinkler contractor (signed) Greg C. Sani	Title PRESIDENT	Date 4/11/23

Additional explanations and notes:

TEC CONSTRUCTORS SPEC
BUILDING SPECIALTY CONTRACTORS
3467 West Ashcroft Avenue • Fresno, California 93722
Tel (559) 227-5060 • Fax (559) 227-5068
WCM, Inc. dba Tec-Spec • CA Lic. #723925

Transmittal

TO:
DBKO DESIGN + DESIGN

3406 VIA LIDO, SUITE 1A#24

NEWPORT BEACH, CA 92663

DATE:	4/19/2023	Job #21107
ATTN:	CHRISTIE SWARTS	
RE:	MADERA INDUSTRIAL WAREHOUSES,	
	MADERA, CA	
	COPY SENT VIA E-MAIL	

Gentlemen:
WE ARE SENDING YOU ☒ Attached ☐ Under separate cover via _____ the following items:

☐ Shop Drawings ☐ Prints ☐ Plans ☐ Samples ☐ Specifications

☐ Copy of Letter ☐ Change Order ☐ _____

COPIES	NO.	DESCRIPTION
1 EACH	1 PG.	SUBCONTRACTOR WARRANTY
1 SET	2 PGS.	ASI PRODUCT CARE & MAINTENANCE

THESE ARE TRANSMITTED as checked below:

☐ For approval ☐ Approved as submitted ☐ Resubmit _____ copies for approval

☒ For your use ☐ Approved as noted ☐ Submit _____ copies for distribution

☒ As requested ☐ Returned for corrections ☐ Return ____ approved _____

☐ For review/comment ☐ For Bids Due _____ ☐ PRINTS RETURNED AFTER LOAN TO US

REMARKS _____

TEC-SPEC CONSTRUCTORS

cc: JOBFILE

By: William C. McKeand, President

BUILDING SPECIALTY CONTRACTORS
3467 West Ashcroft Avenue • Fresno, California 93722
Tel (559) 227-5060 • Fax (559) 227-5068
WCM, Inc. dba Tec-Spec • CA Lic. #723925

SUBCONTRACTOR WARRANTY

PROJECT: MADERA INDUSTRIAL WAREHOUSES (JOB #21107)

LOCATION: 325, 335, 345, 355 S. SCHNOOR AVENUE, MADERA, CA

OWNER: MADERA INDUSTRIAL WHSE, LLC

GENERAL CONTRACTOR: DBKO DESIGN+BUILD LLC

We, **TEC-SPEC CONSTRUCTORS**, Subcontractor for **BIKE RACKS, TOILET ACCESSORIES, FIRE EXTINGUISHERS & MISC. NON-ILLUMINATED CODE SIGNS**, do hereby warrant that all labor and materials furnished and work performed in conjunction with the above referenced project are in accordance with the Contract Documents and authorized modifications thereto, and will be free from defects due to defective materials or workmanship for a period of **ONE YEAR (1)** years(s) from the Date of Substantial Completion.

Should any defect develop during the warranty period due to improper materials, workmanship or arrangement, the defect, including adjacent work displaced, shall be made good by the undersigned at no expense to the Owner.

The Owner will give Subcontractor written notice of defective work. Should Subcontractor fail to correct defective work within 60 days after receiving written notice, the Owner may, at their option, correct defects and charge Subcontractor costs for such correction. Subcontractor agrees to pay such charges upon demand.

FOR: TEC-SPEC CONSTRUCTORS

BY: _____

TITLE: WILLIAM C. McKEAND, PRESIDENT

DATE: APRIL 24, 2023

October 31, 2016

All of our products are designed and manufactured to high quality standards to ensure many years of satisfactory service. To assure long life and beauty, the product should be cleaned, protected and maintained. Usually units that have just been installed will require cleaning after the protective plastic film has been removed. Depending upon how long the units have been in storage prior to installation, a product such as 3M 6041 may be helpful in removing any stubborn vinyl & adhesive residue.

Under normal usage, Stainless Steel products require regular cleaning. Easiest is with a soft clean rag moistened with a mild detergent followed by water-moistened clean rag and then a dry rag, much the same as stainless steel sinks, pots & pans and eating utensils. For a "new" look surfaces can be wiped with lemon oil applied by soft polishing cloth to maintain sheen.

Stainless Steel should be protected against Muriatic acid and caustic or abrasive materials, and harsh cleaning detergents [with pH outside the range 7 ± 1.5]. In the event such agents cause discoloration, polishing with a stainless steel cleaner such as 3M Stainless Steel Cleaner & Polish® and a soft cloth on bright or mirror finishes, or for satin finish sur-faces the SS cleaner and 3M Scotch Brite® pad either blue (less aggressive) or green (more aggressive) is recommended.

Plastic, Phenolic or laminate materials can be maintained with general-purpose protectant products such as Armor All®. Do not soak edges of laminated products to allow moisture to seep into edge seams as this may lead to delamination as the core swells over time.

Soap dispensers located in low traffic areas should have the soap dispenser valves wiped down to remove any air-hardened soap residue left on the nozzle spouts. This should be done as part of the day-to-day janitorial maintenance routine covering them. General cleaning on a regular schedule is adequate for soap dispensers in higher traffic areas, with no special attention required. Specific soap dispenser management information is on the product TDS.

Dryer products are designed to be maintenance free. There are no user adjustable or serviceable parts inside the housing. General cleaning of the exterior housing and nozzle surfaces on a regular schedule is adequate, with no special attention required. Any general-purpose spray-and-wipe type cleaner, such as Formula 409® or Windex® is appropriate for porcelain enameled surfaces. For Stainless Steel covers follow the same guidelines for SS cabinet. Periodically, the sensor lens (if so equipped) should be wiped clean with a soft towel dampened with mild soap and water (NOT SOAKED), and rinse-wiped and dried. In highly dusty environments, the inside of the nozzle and/or exhaust screen should be examined regularly for dust and/or lint build-up, which should be removed. If necessary, maintenance crews can open the housings with special security wrenches (after the power has been shut off) to clean the inside of the screen and/or the blower unit and heating element.

NOTES FOR DRYERS

1. Repair parts are available for all internal components, with service kits including instructions available for major sub assemblies. These are designed to be installed by qualified technician ONLY.
2. DO NOT SOAK any dryer unit. They are not designed for wet wash-down. Exterior surfaces only may be wiped. Refer to cleaning instructions in unit model manual.
3. DO NOT ALLOW any in-housing access or "service" by unqualified personnel.

NOTES FOR MIRRORS:

- Glass surfaces should be cleaned with any suitable non-abrasive standard glass cleaner, such as Windex® or Glass Plus®. Do NOT use cleaner with ammonia or bleach. Plastic surface mirrors {D & E glazing only} can be washed with mild soap and damp cloth with light pressure to remove splash & spatter, taking care to avoid mirror edges. To remove grease, oil or tar deposits on the mirror surface either kerosene or hexane may be used. Do not use kitchen cleaning sprays or window cleaners or any scouring compounds, or any other unlisted chemical product cleaners.
- For protection each D and E glazing mirror has a durable paint backing and a removable masking on the front. This masking should remain in place to protect the mirrors during all phases of installation. Plastic mirrors should be handled with the masking left on. Care should be taken to avoid sliding the mirrors against each other.
- After installation if there is trouble removing the masking, aliphatic naptha, kerosene or distilled alcohol may be used to moisten and soften the adhesive. Do not use any other unlisted chemical product cleaners or sharp objects to remove the masking.
- For long term maintenance of surface gloss the plastic mirror may be occasionally polished using a clean flannel cloth and good plastic cleanser and/or polish, e.g. Johnson's Pledge®. Follow the polishing instructions on the container label.
- To repair vandalism fine scratches use a plastic scratch remover or compound cleaner and apply by hand polishing. Remove all residue and polish as above step No. 3. Deep scratches can be smoothed out by lightly sanding with 400 grit wet paper, and then following the fine scratch step and polishing step as above.

GENERAL NOTES

Any effects of vandalism or tampering should be repaired immediately by the user/owner to prevent any product performance deterioration. Products severely damaged must be replaced before they become hazardous. Proper maintenance procedures are the only pre-scribed method of ensuring a long, trouble free life for the product. Properly maintained facilities also contribute to the general feeling of well-being that characterizes the ambiance of a hygienic installation. Failure to follow proper maintenance procedures may shorten service life and will reduce product aesthetic quality level over time. Such a condition tends to encourage the disrespect that engenders overt vandalism and may forfeit any user/owner claims to warranty.

SUBCONTRACTOR WARRANTY FORM

PROJECT: Madera Industrial Warehouse

LOCATION: 335 S Schnoor, Madera, CA 93637

OWNER:

GENERAL CONTRACTOR: DBKO

We, The Tint Shop, Subcontractor for Joe's Mobile Tint, do hereby warrant that all labor and materials furnished and work performed in conjunction with the above referenced project are in accordance with the Contract Documents and authorized modifications thereto, and will be free from defects due to defective materials or workmanship for a period of 1 year(s) from the Date of Substantial Completion.

Should any defect develop during the warranty period due to improper materials, workmanship or arrangement, the defect, including adjacent work displaced, shall be made good by the undersigned at no expense to the Owner.

The Owner will give Subcontractor written notice of defective work. Should Subcontractor fail to correct defective work within 60 days after receiving written notice, the Owner may, at his option, correct defects and charge Subcontractor costs for such correction. Subcontractor agrees to pay such charges upon demand.

FOR: TTS

BY: Carmen Flores

TITLE: Office Manager

DATE: 4/25/2023

JOE'S Mobile Tint

325 S. PINE ST., SUITE 101B, MADERA, CA 93637

(559) 474-7238

CA LIC # 1016801

JOE'S Mobile Tint After Care INSTRUCTIONS FOR Commercial & Residential Installs

- Do not wash or rub the interior side of glass where the film is applied for the sixty (60) day period of drying time. Lots of sunshine is the fastest curing solution and recommended.
- Throughout the sixty (60) day drying period, your window film will go through many changes. Sometimes, you may see haziness or spotty drying appearance when viewing the glass from the exterior and sometimes the interior of the window. This is normal and should go away after the sixty (60) day drying period.
- Use ONLY Ammonia-Free cleaning products.

FUJITSU

SUBMITTAL 09LMAS1

Halcyon

Inverter Driven Heat Pump | **9,000 BTU Single Zone High SEER Wall Mounted System**

Job Name			
Location		Date	
Engineer		Approval	
Submitted To		Construction	
Submitted By		Unit No	
Reference		Drawing No	

PRODUCT FEATURES

Auto Changeover
24 hr. Timer
Auto Louver: Up/Down
Minimum Heat Mode
Wireless Remote control
Auto Restart
Economy Mode
Auto Fan Mode

MODEL NUMBERS			
Indoor Unit			ASUG09LMAS
Outdoor Unit			AOUG09LMAS1
System			09LMAS1
EFFICIENCIES			
SEER			26.5
EER			14.3
HSPF			13
COP	kW/KW		4.19
	BTU/hW		14.30
OUTDOOR TEMPERATURE OPERATION RANGE			
Cooling	°F(°C)		14 to 115(-10 to 46)
Heating			5 to 75(-15to 24)
CAPACITIES			
Cooling	Rated	BTU/hW	9,000
	Min.—Max.		3,400-10,900
Heating	Rated		12,000
	Min.—Max.		2,800-15,000
LINESET REQUIREMENTS			
Connection Method			Flare
Liquid	in (mm)		Ø 1/4 (Ø 6.35)
Gas			Ø 3/8 (Ø 9.52)
Pre-Charge Length	ft (m)		49 (15)
Minimum Length			10 (3)
Maximum Length			66 (20)
Max. Height Diff.			49 (15)
INDOOR DIMENSIONS & WEIGHT			
Net (H x W x D)	in		10-5/8 x 32-13/16 x 8-3/4
	mm		270 x 834 x 222
Gross (H x W x D)	in		10- 14/16 x 36 x 13- 1/16
	mm		277 x 914 x 332
Net Weight	lb (kg)		22 (10)
Gross Weight			29 (13)
OUTDOOR DIMENSIONS & WEIGHT			
Net (H x W x D)	in		21-5/16 x 31-7/16 x 11-7/16
	mm		542 x 799 x 290
Gross (H x W x D)	in		23- 11/16 x 37 x 14- 12/16
	mm		602 x 940 x 375
Net Weight	lb (kg)		68 (31)
Gross Weight			75 (34)

Intertek

Indoor Unit ETL#: 91987
Outdoor Unit ETL#: 91987

Warranty Information

7 Year Compressor, 5 Year Parts out-of-the-box Warranty

10 Year Compressor, 10 Year Parts Warranty when registered within 60 days of installation in a residence

12 Year Compressor, 12 Year Parts Warranty when registered within 60 days of installation in a residence, and installed by a Fujitsu Elite contractor

ACCESSORIES	
UTY-TTRX	3rd Party Thermostat Converter
UTY-TWRXZ2	Interface Kit
UTY-RNRUZ4	Wired Remote Controller (Touch Panel)
UTY-RSRY	Simple Remote Control
UTY-TFSXF1	WiFi Interface Module
UTY-XWZXZ5	Dry Contact Wire Kit

ENERGY STAR

This system combination is Energy Star qualified

+App available in Apple® App Store and Google® Play Store.

FGLair

Due to continuous product improvements, specifications are subject to change without notice. Please log in to the Fujitsu Portal for the most up-to-date documentation https://portal.fujitsugeneral.com

Effective Date: 1/20/2021 Version 09LMAS1 -2020A

Inverter Driven Heat Pump | **9,000 BTU Single Zone High SEER Wall Mounted System**

FAN DATA				
Indoor Unit Airflow Rate	Cooling	High	CFM (m3/h)	453 (770)
		Medium		353 (600)
		Low		264 (450)
		Quiet		147 (250)
	Heating	High		453 (770)
		Medium		376 (640)
		Low		306 (520)
		Quiet		182 (310)
Outdoor Unit Airflow Rate	Cooling			912 (1,550)
	Heating			912 (1,550)
SOUND PRESSURE				
Indoor Unit	Cooling	High	dB (A)	43
		Medium		36
		Low		30
		Quiet		19
	Heating	High		43
		Medium		38
		Low		33
		Quiet		21
Outdoor Unit	Cooling			46
	Heating			48
REFRIGERANT				
Type				R410A
Charge	lb oz			2lb.2oz.
	kg			1
Oil Type				POE (RB68A)

ELECTRICAL SPECIFICATIONS				
Voltage/Frequency/Phase				208/230 V / 1Ø / 60Hz
Voltage Range				187-253V~60HZ
Current	Cooling	Rated	A	3.1
	Heating	Rated		4
Maximum Operating Current		Cooling		6.4
		Heating		7.9
Starting Current				4
MCA				9.7
Maximum Circuit Breaker				15
Input Power	Cooling	Rated	kW	0.63
		Min.—Max.		0.14-0.92
	Heating	Rated		0.84
		Min.—Max.		0.14-1.61
Power Factor	Cooling		%	88.4
	Heating			91.3
OTHER				
Moisture Removal		pints/h (L/h)		2.7 (1.3)
Energy Star				Yes
Drain hose	Material			PP+HDPE
Size	in (mm)	Ø15/32 (Ø11.8) (I.D.), Ø19/32 to Ø21/32 (Ø15 to Ø16.8) (O.D.)		
Operation Range	Cooling	°F (°C)		64 to 90 (18 to 32)
		%RH		80 or less
	Heating	°F (°C)		60 to 86 (16 to 30)

Wall Bracket Data:

Units: In. (mm)

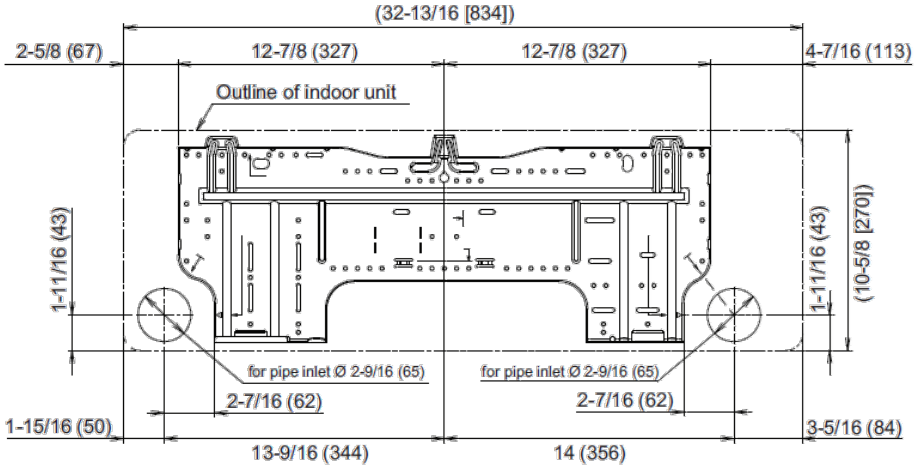

The Fujitsu logo is a worldwide trademark of Fujitsu General Limited. The Halcyon logo and name is a worldwide trademark of Fujitsu General Limited and is a registered trademark in Japan, the USA and other countries or areas. Copyright 2018 Fujitsu General America, Inc. Fujitsu's products are subject to continuous improvements. Fujitsu reserves the right to modify product design, specifications and information in this brochure without notice and without incurring any obligations.

Note: Specifications are based on the following conditions:
Cooling: Indoor temperature of 80°F (26.7°C) DB/67°F (19.4°C) WB, and outdoor temperature of 95°F (35°C) DB/75°F (23.9°C) WB. Heating: Indoor temperature of 70°F (21.1°C) DB/60°F (15.6°C) WB, and outdoor temperature of 47°F (8.3°C) DB/43°F (6.1°C) WB. Pipe length: 25ft. (7.5m), Height difference: 0ft. (0m) (Outdoor unit – indoor unit).

DIMENSIONS

Units: In. (mm)

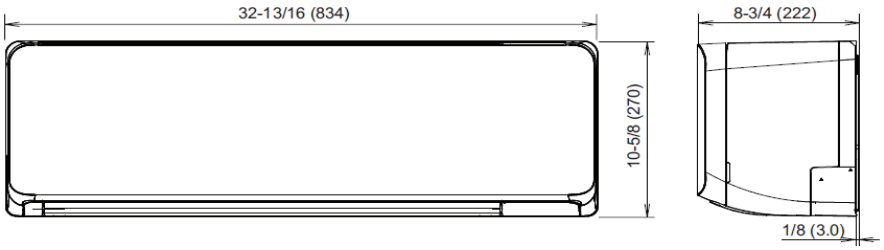

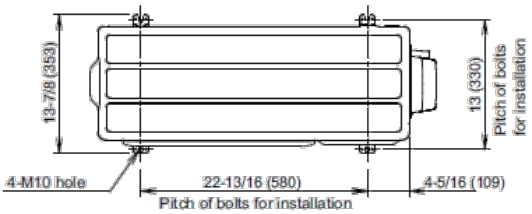

Top view

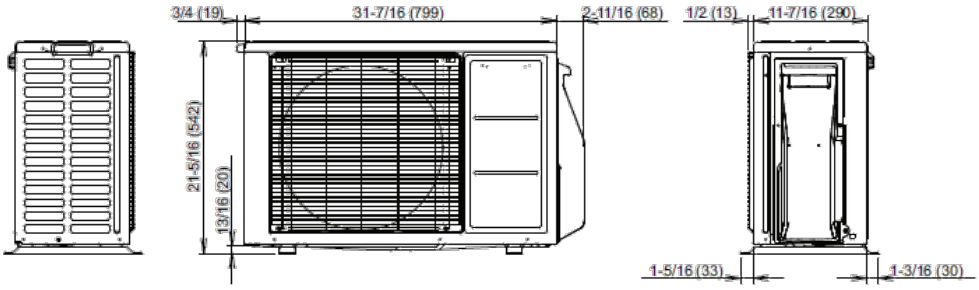

Side view

Front view

Side view

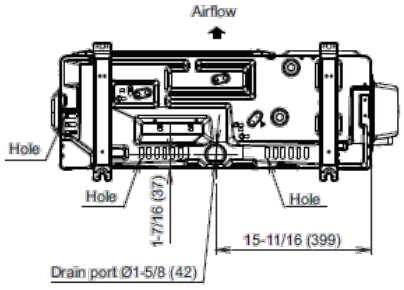

Bottom view

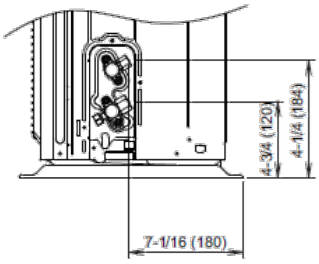

Side view (Valve part)

The Fujitsu logo is a worldwide trademark of Fujitsu General Limited. The Halcyon logo and name is a worldwide trademark of Fujitsu General Limited and is a registered trademark in Japan, the USA and other countries or areas. Copyright 2018 Fujitsu General America, Inc. Fujitsu's products are subject to continuous improvements. Fujitsu reserves the right to modify product design, specifications and information in this brochure without notice and without incurring any obligations.

Note: Specifications are based on the following conditions:
Cooling: Indoor temperature of 80°F (26.7°C) DB/67°F (19.4°C) WB, and outdoor temperature of 95°F (35°C) DB/75°F (23.9°C) WB. Heating: Indoor temperature of 70°F (21.1°C) DB/60°F (15.6°C) WB, and outdoor temperature of 47°F (8.3°C) DB/43°F (6.1°C) WB. Pipe length: 25ft. (7.5m), Height difference: 0ft. (0m) (Outdoor unit – indoor unit).

Sizing instructions

SuperStealth

Use the Certified Air Delivery performance tables and the following procedure to properly size a Seeley International evaporative cooling unit for your application.

The performance or Cooling Capacity of an evaporative cooler is a function of both the air flow (CFM) and air discharge temperature.

Static pressure, or duct system resistance, also impacts on air delivery and should be considered to correctly size the cooling unit.

1 Determine design Conditions
- Outside Dry-Bulb (DB)
- Outside Wet-Bulb (WB)
- Inside Dry-Bulb (TI)

2 Determine the design Sensible Heat Load (Btuh)

3 Determine the Cooler Leaving Air Temperature (LAT)

LAT = DB – [(DB-WB) EFF]
where EFF = 0.87 for Chillcel media

4 Determine the CFM required

$$CFM = \frac{0.925 \times \text{Sensible Heat Load}}{(TI - LAT)}$$

5 Determine the cooler(s) required by referring to the air flow charts to the right.

FAN CURVES

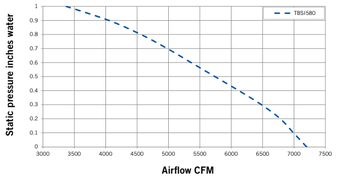

Model#	Industry STD Rating CFM	Motor H.P	Certified Air Delivery (CFM) (static pressure inches water)					
			0.0	0.2	0.4	0.6	0.8	1.0
TBSI 580	10,000	1.0	7200	6780	6120	5360	4560	3370

SUITABLE FOR MOST INDUSTRIES, INCLUDING:

- Warehouses
- Repair / maintenance areas
- Sports centers
- Institutional facilities
- Manufacturing plants
- Storage areas
- Laundries / dry cleaners
- Commercial kitchens
- Agricultural facilities
- Farm building – dairy / poultry / stables

Air diffusers

All plenums are vacuum formed from high strength, low weight ABS plastic. The diffuser consists of aluminum airfoil blades, individually adjustable from fully open to closed for maximum directional air control.

4-sided high capacity commercial air diffuser

Manufacturer Part #089249

Outlets	Free Area ft²	Velocity FPM	Volume CFM	Pressure IWG	Throw Feet
4	5.6	980	5500	0.14	16.5
		1278	7200	0.2	19.5
		1476	8200	0.3	23

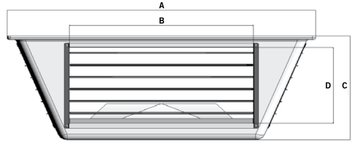

Model#	A	B	C	D
4-sided high capacity commercial air diffuser	34.8	20.7	11.6	9.4

Note: All dimensions are in inches. Drawing shows the actual opening dimensions.

8-sided high capacity commercial air diffuser

Manufacturer Part #089256

Outlets	Free Area ft²	Velocity FPM	Volume CFM	Pressure IWG	Throw Feet
8	7	980	6990	0.14	16.5
		1278	9090	0.2	19.5
		1476	10,488	0.3	23

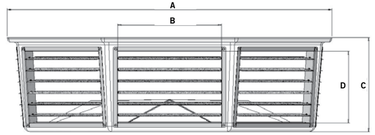

Model#	A	B	C	D
8-sided high capacity commercial air diffuser	42.7	13.6	12.2	9.4

Note: All dimensions are in inches. Drawing shows the actual opening dimensions.

Cat No B0784 REV C (1216) US

AUSTRALIAN MADE

SEELEY INTERNATIONAL

Seeley International Americas
ABN 23 054 687 035
1002 S 56th Avenue, Suite # 101, Phoenix AZ 85043
Phone 602 353 8066 Fax 602 353 8070
Email marketing@seeleyinternational.com www.seeleyinternational.com

Information in this brochure was correct at the time of preparation. E & OE

Certified System
Quality ISO 9001
SAI GLOBAL

Breezair
NUMBER ONE IN NATURAL COOLING

SEELEY INTERNATIONAL 30 YEARS IN THE USA

TBSI Series

World's first high performance inverter axial evaporative cooler

FEATURING ADVANCED MAGIQTOUCH CONTROLLER

SuperStealth

AUSTRALIAN MADE

SEELEY INTERNATIONAL

Why is Breezair unique?

25 Years	10 Years	5 Years	3 Years
Corrosion-free cabinets guarantee	Structural components guarantee	De-lamination of Chillcel media guarantee	Pump, motor & junction box guarantee

Technical information

SEELEY INTERNATIONAL 30 YEARS IN THE USA

Why Breezair?

For more than four decades, Seeley International's brands have been synonymous with leading-edge technology, innovative design and superior cooling performance, as well as outstanding product reliability and ease of maintenance.

Seeley International's dedication to innovation through the highest standards of research, engineering and manufacture, as well as our commitment to excellence in customer service, all combine to deliver the best possible cooling systems at the best possible price.

Designed and made in Australia to cope with even the harshest conditions, Breezair features a range of benefits exclusive to Seeley International, including:

- Permatuf, corrosion-proof materials
- Injection moulded cabinets and components that will not rust or fade
- Powerful Tornado® pump
- AQUAflow non-clogging water distribution system
- Intelligent WATERmanager system
- New Mini-Cell Chillcel® Pad Technology
- Amazing auto Clean and Dry function
- Available with the touch screen MagIQtouch Controller

Lightweight materials and "snap together" assembly make the TBSI Series a 'breeze' to install. **Contractors love them!**

Breezair Installation, Tucson, Arizona

World's first high performance inverter axial evaporative cooler

- ***Extra static pressure***
- ***Outstanding cooling performance and energy efficiency with the powerful SuperStealth axial fan and inverter motor***
- ***Quietest axial evaporative cooler on the market***

New Venturi

Specifically designed for mounting the Invertair motor and the SuperStealth fan; it ensures minimum disturbance of air stream.

SuperStealth™ fan

SuperStealth axial fan is specifically designed to be more energy efficient and even quieter than the standard Stealth fan.

Invertair™ inverter motor

The Inverter motor is highly efficient throughout the operating range, using far less energy than a standard fan and motor.

NEW BREAKTHROUGH

Mini-Cell^ Chillcel® Pad Technology!

- Revolutionary new Mini-Cell structure with small cell design
- A new cutting edge level of cooling capacity
- Dramatically improves cooling efficiency due to 25% more surface area
- The only evaporative cooling pads fully manufactured in Australia
- Suitable for the harshest climates, and now, the absolute over-performer!

^Patent pending

AQUAflow

Breezair's AQUAflow non-clogging water distribution is one of the things that make it unique. The water distributor maximizes cooling efficiency by supplying a continuous and balanced flow of water across the cooling pads. This is different to any other brand of evaporative coolers, which are subject to water flow variations for a number of reasons. Breezair's balanced flow ensures highest evaporation efficiency and maximum cooling.

Permatuf Corrosion-proof Cabinet

The Breezair cabinet will not corrode or rust. The UV stabilized structural polymer material is the same type used to make acid baths, battery cases and some space satellite components. Plus, it's designed to blend with any property.

Tornado Pump

The perfect pump for the job! The Tornado pump is built to last. Designed, manufactured and tested by Seeley International, the Tornado pump epitomizes reliability. It features very safe material choices, an encapsulated motor with overload cut-out, stainless steel shafts and bearings fully protected from water. Plus, it has a clever impact-start feature that will overcome any tendency for the pump to become locked up with residue during prolonged off periods. The strong synchronous motor has constant speed, independent of voltage fluctuations, and runs very cool.

NEW! External Air Sensor (Optional Extra)

Displays current outside temperature

Intuitively optimises water and energy usage based on outside ambient conditions

Extends the life of your air conditioner by automatically draining the water tank when temperature nears freezing

MagIQcool™ Controller (standard)

Operate one cooler from an easy to use, wall mounted thermostat controller. The controller comes with 65' wiring loom, that can be extended up to a maximum length of 328'.

AUTOWeatherseal

The AUTOWeatherseal closes the cooler air discharge outlet automatically, thus significantly reducing natural air currents from circulating in and out of the building. The result – a more comfortable and controlled environment.

WATERManager System

The Breezair WATERManager ensures optimum machine life with minimum maintenance by constantly checking water quality. As the water in the cooler evaporates, it leaves behind impurities and salts, which then become deposited on the cooling pads and cause the cooling power to fall. The WATERManager System senses water quality with a probe that sends a signal back to the electronic module, which then ejects some dirty water and allows fresh water to enter.

Clean and Dry Function

The cooler drains automatically when it's not in use, preventing algae growth and maintaining a clean cooler.

Digital Smartbox / Control Power Module

A state-of-the-art digital electronic control means optimum performance. The Smartbox digital control module monitors and controls all of the cooler's features to provide ultimate comfort conditions, temperature sensing and water quality supervision – completely safely and reliably. The module also incorporates diagnostic features and memory to aid trouble-shooting and minimize downtime. Several user choice parameters are available to allow you to set up your preferred environment.

Optional Features

MagIQtouch Controller

The advanced touch screen MagIQtouch Controller offers intuitive user navigation (including in-built Installation Wizard), making the operating process simple. Each cooler comes supplied with a 65' wiring loom and it may be extended up to a maximum length of 130' (optional), and to operate up to 135 coolers* from a single MagIQtouch Controller, using optional Link Module and wiring loom - no special controllers required!

*Total loom length must be <= 3280'

MagIQtouchTM BMS Control

Our coolers are BMS compatible. Please contact your local representative for further option details.

Link Module

Allows connection to additional coolers and sensor into the system using RJ 6 way communication cables.

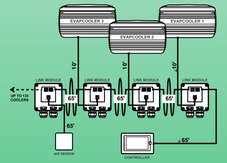

Air Sensor

Air Sensor is a remote temperature and humidity sensing module that enables you to mount the MagIQtouch Controller in a convenient location (e.g. control room), while still sensing air from the conditioned space.

Technical Specifications (TBSI 580)

Airflow	Industry standard (cfm)	10,000
Cooling capacity*	0.3 IWG (BTU/hr)	62,700
Power consumption (total)	Watts max	1500
	Current max (amp)	7.0
Power supply	Voltage / Phases / Hz	200-240 / 1 / 60
Controller	Type	Digital
Fan	Type	Axial
	Diameter (mm)	534
Motor	Type	Inverter
	Speed max (rpm)	1700
	Rating (Watts)	950
	Current (amp)	5.5
	Voltage / Phases / Hz	200-240 V / 1 / 60
	Overload	Two 'one shot' fuses
	Enclosure	IP X4
Pump	Type	Centrifugal
	Motor	Synchronous
	Rating Watts (input)	30
	Flow rate (gal/min)	4.4 @ 3.9 ft head
	Voltage / Phases / Hz	200-240 / 1 / 60
	Overload	Auto reset
	Enclosure rating	IP X4
Cooling pad Chillcel	Size (inches)	33½ x 20¼ x 4¼ x 4 pads
	Pad area (ft²)	19.3
Water	Tank capacity (gal)	6
	Inlet (inches)	1/2" male BSP
	Drain (mm/inches) Configurable to local requirements	40mm / 1½" male BSP
Shipping	Dimensions including pallet (inches)	45¼ x 45¼ x 35½ (H)
	Volume (ft³)	42
	Mass (lbs)	150
	Operating (lbs)	201
Connecting duct (raw edged)	Length x width (inches)	21 5/8 x 21 5/8

*This cooler has been tested in accordance with the requirements of the California Energy Commission Appliance Efficiency Regulations, Section 1603 and 1604.

Cooler discharge air temperature chart

Ambient Dry Bulb Temperature °F	Ambient Relative Humidity %								
	10	20	30	40	50	60	70	80	90
50	36.6	38.3	39.9	41.5	43.0	44.5	45.9	47.3	48.7
60	43.3	45.5	47.6	49.6	51.5	53.3	55.1	56.8	58.4
70	49.8	52.6	55.2	57.6	59.9	62.1	64.2	66.3	68.2
80	56.0	59.5	62.7	65.6	68.4	71.0	73.4	75.7	77.9
90	62.1	66.3	70.1	73.6	76.9	79.9	82.6	85.2	87.7
100	68.0	73.1	77.6	81.7	85.4	88.8	91.9	94.8	N/A
110	73.9	79.9	85.2	89.8	94.0	N/A	N/A	N/A	N/A
120	79.7	86.8	92.8	98.0	102.6	N/A	N/A	N/A	N/A
130	85.5	93.7	100.5	106.3	N/A	N/A	N/A	N/A	N/A

This chart represents approximate air temperatures based on 87% saturation efficiency at sea level. From tests carried out to Australian Standard 2913.

CABINET DETAILS

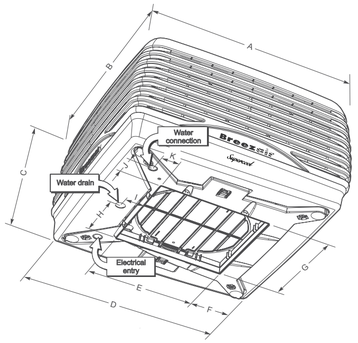

Model#	A	B	C	D	E	F	G	H	I	J	K
TBSI 580	45.25	45.25	32.875	45.25	21.625	9.75	21.625	1.375	3.75	3.25	3.25

Note: All dimensions are in inches

Typical installation

Drain outlet	1 ½" BSP to ¾" OD Reducer piece designed for push-on use with a flexible hose (3/4" ID) or solid PVC pipe (3/4" ID)
Water inlet	½" BSP to 3/8" Nom or ½" BSP to ¼" compression adapter pieces
Electrical	½" Flexible conduit
Install kit	The kit consists of MagIQtouch wall control, 65' wiring loom, auto drain valve and plumbing fittings (supplied as standard inside cooler).

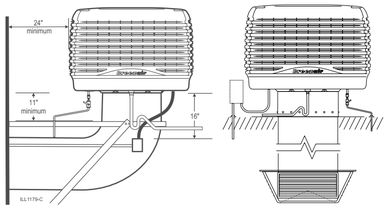

Breezair
By SEELEY INTERNATIONAL™

SuperStealth®

TBSi 580

COMMERCIAL & INDUSTRIAL

THE WORLD'S COOLEST, QUIETEST AND MOST ENERGY EFFICIENT EVAPORATIVE COOLER

Introducing the advanced

MAGIQTOUCH

Next generation smart controller

THE BREEZAIR TBSI SERIES: INVERTER AXIAL
HIGH PERFORMANCE EVAPORATIVE COOLER

COOL WORKING ENVIRONMENTS WITH EASE

Breezair TBSI boasts the most advanced features available in evaporative air conditioners. It's led the market in its class for many years – and still remains the most efficient and quietest available. Breezair features a range of benefits exclusive to Seeley International – while delivering 100% fresh, cool, outside air at much lower costs than refrigerated cooling methods.

HIGHLY DURABLE AND NON-CORROSIVE CABINET AND WATER RESERVOIR

High performance Permatuf® polymer construction will not corrode or rust.

EXCEPTIONAL WATER DISTRIBUTION INCREASES COOLING EFFECT

This Australian designed, world patented, free flow, water distributor ensures constant, even pad saturation increasing the cooling effect and outperforming competitor products.

AUTO WEATHERSEAL

The AUTO Weatherseal closes the cooler air discharge outlet automatically, thus significantly reducing natural air currents from circulating in and out of the building. The result – a more comfortable and controlled environment.

DIGITAL SMARTBOX™

The Smartbox™ digital control module monitors and controls all of the cooler's features to provide ultimate comfort conditions, temperature sensing and water quality supervision – completely safely and reliably.

TORNADO® PUMP THAT WON'T BLOCK

- Australian designed and manufactured
- Exceptional reliability in extreme conditions
- Dual directional – it can't block!

MAGIQTOUCH® (Additional Cost)
TOUCH SCREEN TECHNOLOGY

Smart, sophisticated and incredibly intuitive, your MagIQtouch® controller makes operating your Breezair, a breeze. Control the temperature, fan speed and many more features on a user friendly touch screen.

MAGIQTOUCH® wired controller
Supplied with Cooler

Touch screen, wall mounted controller wired to your home or building

MAGIQTOUCH® wireless controller
(Radio Frequency) *Optional*

Use the latest in Radio Frequency (RF) channel hopping technology with no need for wiring

BREEZAIR GUARANTEE

For complete peace of mind, Breezair backs every one of its air conditioning systems with an industry leading comprehensive guarantee program. Refer to your owner's manual for all service and guarantee terms and conditions.

PERMATUF CABINET 25 YEAR GUARANTEE · STRUCTURAL 10 YEAR GUARANTEE · DE-LAMINATION 5 YEAR GUARANTEE · PUMP & MOTOR 3 YEAR GUARANTEE

FLEXIBLE COOLING

If you need to cool small areas within a large space, then spot cooling is an effective option. It offers an envelope of cool, high velocity air that can be directed to a specific area, irrespective of the surrounding conditions.

INVERTAIR™ INVERTER MOTOR

- Ensures long term performance and incredible reliability of your system
- Variable speed motor offers maximum control over comfort level and uses far less energy than a standard fan and motor
- Motor has been tested by a Nationally Recognized Testing Laboratory. ETL Listed to Standard for Electric Fans (UL-507)

SUPERSTEALTH® FAN

SuperStealth® axial fan is specifically designed to be more energy efficient and quiet

BREAKTHROUGH BLACK OPAL™ MINI-CELL CHILLCEL® PAD TECHNOLOGY

- The only evaporative cooling medium of its kind. Fully manufactured in Australia. It's an **absolute out-performer!**
- Exclusive small cell design provides cutting-edge cooling capacity.
- Maintains our global leading Mini-Cell Chillcel® pad technology, which increases surface area of the pads by 25%, dramatically multiplying cooling capacity and efficiency - **BEYOND BELIEF!**
- **BLACK OPAL™ MINI-CELL CHILLCEL® pads** deliver transformational aesthetics to your home enabling the unit to blend seamlessly into its surroundings.

WATERMANAGER™ SAVES WATER

- Uses the minimum amount of water to achieve high efficiency cooling
- Water quality monitoring to maximise water savings

AUTO WATER DRAINING KEEPS YOUR SYSTEM CLEAN

- Empties the reservoir automatically when system is not in use, leaving it clean and dry
- Ensures the system is operating at maximum efficiency, while using the minimum amount of water
- Helps to avoid the seasonal maintenance* as required by some other similar products

*Seasonal maintenance does not replace regular maintenance of the unit as required for peak performance.

OPTIONAL EXTRAS MAGIQTOUCH® AIR SENSORS

Internal Air Sensor

A remote temperature and humidity sensing module.

Enables the MagIQtouch® Controller to be mounted in a convenient location (e.g. control room or living area), while still sensing air from the conditioned office area.

External Air Sensor

Intuitively optimizes water and energy usage based on outside ambient conditions and displays current outside temperature.

Sensing module automatically drains the water tank when temperature nears freezing.

COOLER CONNECTIVITY

Operate multiple coolers from a single MagIQtouch® controller, using optional link module and wiring loom – no special controllers required!

For all connectivity options, please refer to the installation manual.

TBSi Technical Information

TBSi 580

Specification		TBSi 580
Airflow	Industry standard (cfm)	10,000
Cooling capacity*	0.3 IWG (BTU/hr)	62,700
Power consumption (total)	Watts max	1500
	Current max (amp)	7.0
Power supply	Voltage / Phases / Hz	200-240 / 1 / 60
Controller	Type	Digital
Fan	Type	Axial
	Diameter (mm)	534
Motor	Type	Inverter
	Speed max (rpm)	1700
	Rating (Watts)	950
	Current (amp)	5.5
	Voltage / Phases / Hz	200-240 V / 1 / 60
	Overload	Two 'one shot' fuses
Pump	Type	Centrifugal
	Motor	Synchronous
	Rating Watts (input)	30
	Flow rate (gal/min)	4.4 @ 3.9 ft head
	Voltage / Phases / Hz	200-240 / 1 / 60
	Overload	Thermal One Shot
	Enclosure rating	IP X4
Cooling pad Chillcel	Size (inches)	33½" x 20¾" x 4¾" x 4" pads
	Pad area (ft2)	19.3
Water	Tank capacity (gal)	6
	Inlet (inches)	½" male BSP
	Drain (mm/inches) Configurable to local requirements	40mm / 1½" male BSP
Shipping	Dimensions including pallet (inches)	45¼" x 45¼" x 35½" (H)
	Volume (ft3)	42
	Mass (lbs)	150
	Operating (lbs)	201
Connecting duct (raw edged)	Length x width (inches)	21⅝" x 21⅝"

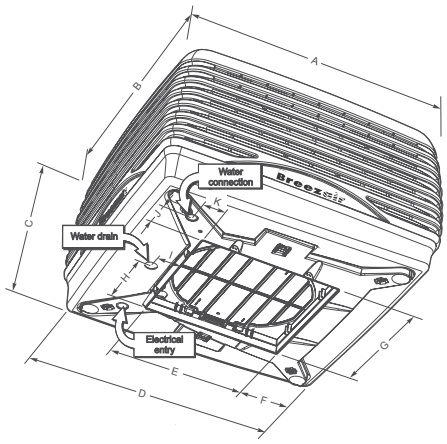

CABINET DETAILS											
Model#	A	B	C	D	E	F	G	H	I	J	K
TBSi 580	45 ¼	45 ¼	33	42 ½	21 ⅞	9 ¾	21 ⅞	10 ¾	3 ¾	3 ¼	3 ¼

Note: All dimensions are in inches.

FAN CURVE (CFM)

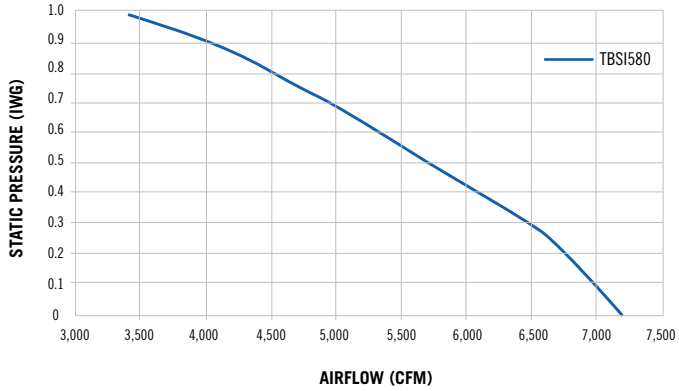

Model#	Industry STD Rating CFM	Motor H.P	Certified Air Delivery (CFM) (static pressure inches water)					
			0.0	0.2	0.4	0.6	0.8	1.0
TBSi 580	10,000	1 ¼	7200	6780	6120	5360	4560	3370

Typical installation

Drain outlet	1 ½" BSP to ¾" OD Reducer piece designed for push-on use with a flexible hose (¾" ID) or solid PVC pipe (¾" ID)
Water inlet	½" BSP to ⅜" Nom or ½" BSP to ¼" compression adapter pieces
Electrical	½" Flexible conduit
Install kit	The kit consists of MagIQtouch wall control, 65' wiring loom, auto drain valve and plumbing fittings (supplied as standard inside cooler).

Cooler Discharge Air Temperature Chart

Ambient Dry Bulb Temperature °F	Ambient Relative Humidity %								
	10	20	30	40	50	60	70	80	90
50	37	38	40	42	43	45	46	47	49
60	43	46	47	50	52	53	55	57	58
70	50	53	55	58	60	62	64	66	68
80	56	60	63	66	68	71	73	76	78
90	62	66	70	74	77	80	83	85	88
100	68	73	78	82	85	89	92	95	N/A
110	74	80	85	90	94	N/A	N/A	N/A	N/A
120	80	87	93	98	103	N/A	N/A	N/A	N/A
130	86	94	101	106	N/A	N/A	N/A	N/A	N/A

This chart represents approximate air temperatures based on 87% saturation efficiency at sea level from tests carried out to Australian Standard 2913. TBSi has been tested by the Nationally Recognized Testing Laboratory. ETL List to Standard for Electric Fans (UL-507).

Sizing Instructions

Use the Certified Air Delivery performance tables and the following procedure to properly size a Seeley International evaporative cooling unit for your application.

The performance or Cooling Capacity of an evaporative cooler is a function of both the air flow (CFM) and air discharge temperature.

Static pressure, or duct system resistance, also impacts on air delivery and should be considered to correctly size the cooling unit.

1. Determine design Conditions

Outside Dry-Bulb (DB)
Outside Wet-Bulb (WB)
Inside Dry-Bulb (TI)

2. Determine the design Sensible Heat Load (Btu/h)

3. Determine the Cooler Leaving Air Temperature (LAT)

LAT = DB – [(DB-WB) EFF]
where EFF = 0.87 for Chillcel media

4. Determine the CFM required

$$CFM = \frac{0.925 \times \text{Sensible Heat Load}}{(TI - LAT)}$$

5. Determine the cooler(s) required by referring to the air flow charts above.

www.seeleyinternational.com

SEELEY INTERNATIONAL

Seeley International Americas
1002 S. 56th Avenue, Suite #101, Phoenix, AZ 85043 | 602.353.8066
4430 Glencoe Street, Denver, CO 80216 | 303.375.0878
ussales@seeleyinternational.com

Information in this brochure was correct at the time of preparation. E & OE

Breezair By SEELEY INTERNATIONAL · Climate Wizard By SEELEY INTERNATIONAL · convair By SEELEY INTERNATIONAL

Cat No. B0809 Rev A (1221)

Fujitsu General America, Inc. – Limited Warranty Statement

MODELS COVERED UNDER THIS WARRANTY: All Halcyon models, excluding R22 models, IAQ models, ASU30RLX, ABU18RULX, ABU24RULX, ABU36RSLX, AUU18RLCX, AUU24RCLX, AUU36RCLX, AUU42RCLX, AOU18RLX, AOU24RLX, AOU30RLX, AOU36RLX, AOU42RLX

This is a **Limited Warranty** provided by **Fujitsu General America, Inc.** ("FGAI") to the original end-user consumer ("Purchaser") of the Fujitsu Halcyon System (the "System") installation, operation or use of the System will constitute acceptance of the terms hereof.

1. STANDARD LIMITED WARRANTY COVERAGE (PARTS ONLY)
FGAI warrants for the time periods set forth below that the System will be free of defects in material and workmanship for human thermal comfort or other approved applications under normal use and service. Any repaired or replaced component or part shall be warranted for the remainder of the original limited warranty period or thirty (30) days after shipment of replacement part, whichever is longer. FGAI will provide the following benefits, subject to the conditions stated below:

PARTS – For a period of **five (5) years** beginning on the date of installation completion/ start-up date verified by an installer's invoice or proof of purchase. FGAI will supply, at its option, either new, like kind or rebuilt replacement Parts. "Parts" are defined as integral components of Fujitsu Halcyon condenser, evaporator or refrigerant branch boxes and only includes items which are not otherwise covered or excluded under this warranty.

COMPRESSOR – For a period of **seven (7) years** beginning on the date of purchase or installation completion and system start-up, as verified by an installer's invoice or proof of purchase, FGAI will supply, at its option, either new, like kind or rebuilt replacement compressor(s).

CONTROLS AND ACCESSORIES – For a period of **ninety (90) days** beginning on the date of purchase or installation completion and system start-up, as verified by an installer's invoice or proof of purchase, FGAI will supply, at its option, either new, like kind or rebuilt replacement controls. Controls include: Wired Remote Control, IR Receiver, Simple Remote Control, Central Remote Controller, Wireless Remote Control, Fujitsu External Drain Pump and any other Fujitsu Halcyon Controls or Accessory Components.

1.1. EXTENSION OF THE STANDARD LIMITED WARRANTY
The Standard Limited Warranty covering parts and the compressor(s) will be extended to a period of ten (10) years to the Purchaser if the following conditions are met:

a) The System is registered **ONLINE** within 60 days from the date of installation, or, in the case of a newly constructed home, within 60 days of the Purchaser's purchase of the home.
b) The System is installed in a residential single family or owner occupied multifamily home.
c) The Purchaser resides at the location where the System is installed.
d) The System is purchased after June 1, 2015.
e) Defective Parts and Compressor are made available for return to FGAI and become the property of FGAI.

The Standard Limited Warranty covering parts and the compressor(s) will be extended to a period of twelve (12) years to the Purchaser if, in addition to meeting the conditions of Section 1.1 (a)-(e), the System is: (f) installed by a Fujitsu Elite Contractor.

2. PROPER INSTALLATION – This Limited Warranty applies only to Systems that are installed by contractors who are licensed for HVAC for HVAC installation under applicable local and state law (Licensed Contractor), and who install the System in accordance with: (a) all applicable building codes and permits; (b) FGAI's installation and operation instructions; and (c) good trade practices.

3. REGISTRATION – Register the System online at: http://www.fujitsugeneral.com/contractors/registration/.

Fujitsu Elite Contractor may register through the toolbox website at: http://www.fujitsugeneral.com/dealer_toolbox.htm.

4. TERMS OF WARRANTY – **BEFORE REQUESTING SERVICE** please review the user instructions and technical documentation for your System to confirm that the electric power is supplied and user controls are properly adjusted.

TO OBTAIN WARRANTY PARTS SERVICE contact the **Fujitsu Elite Contractor** who installed the System, or search for the nearest HVAC contractor within the applicable Limited Warranty period. A list of **Fujitsu Elite Contractors** may be obtained at www.fujitsugeneral.com, by calling 1-866-952-8324 or by emailing servicehvac@fujitsugeneral.com or partsinfo@fujitsugeneral.com. Proof of purchase or proof of installation by a Licensed Contractor is required to make this Limited Warranty valid. Protect your warranty by registering your product immediately, buying only from an authorized dealer, and checking the product and packaging to verify that the factory serial number have not been tampered with.

THESE LIMITED WARRANTIES DOES NOT INCLUDE LABOR or any other costs incurred during service, maintenance, repair, removing, replacing, or installing the System, or any parts or other components. . Purchaser is solely responsible for all such labor and costs. Please consult the applicable technical documentation regarding maintenance procedures. This Limited Warranty shall not be modified or amended by, and no obligation or liability shall arise out of, FGAI providing, directly or indirectly, any technical advice, information and/or service to Purchaser in connection with the System.

5. THESE LIMITED WARRANTIES DO NOT COVER:

a) A System sold and/or installed outside the United States, U.S. Territories or Canada, or Systems designed for markets other than the United States.
b) Any System purchased from an online retailer.

c) A System not installed, serviced, maintained or operated in accordance with instructions and guidelines set forth in the installation, operation, maintenance, software or engineering publications made available by FGAI.
d) A System not installed or serviced in accordance with local and state law, applicable building codes and permits.
e) A System that had a serial number or any part(s) thereof altered, defaced or removed in any way.
f) Any and all shipping or freight charges or damages arising from transportation of parts covered by the Limited Warranty.
g) Damage and/or failure caused by fire, water, wind, floods, impact damage from projectiles, earthquake, theft, riot, vandalism, force majeure, acts of war, or any and all acts of God.
h) Damage and/or failure caused by power surge, interruptions of electrical power, faulty power supply, improper wiring or installation or fluctuations in electrical power.
i) Damage and/or failure caused by misuse, neglect, improper adjustment of user controls, modification and/or alteration of the System or any component thereof, improper sizing or design, or incorporation with other products.
j) Damage and/or failure caused by locating or exposing the System to extreme weather or environmental conditions (outside the recommended installation requirements as stated in the FGAI installation manual), corrosive chemical vapors and/or liquids including, but not limited to: salt air or spray, chlorinated water or vapor (such as in an enclosed pool area), fluorine vapor, formaldehyde, sulfur or other components of formicary corrosion.
k) Damage caused by frozen or broken water pipes in the event of equipment failure.
l) Wear and tear or changes in appearance of the System that do not affect its performance.
m) Replacement of fuses and replacement or resetting of circuit breakers.
n) Damage due to the use of unapproved refrigerant types or use of recycled refrigerant.
o) System installation or set up, or removal of a System from the location where it was originally installed.
p) Any System removed from the location where it was originally installed.
q) Incorrectly matching of product or system.
r) Any third party component used to install the Halcyon product, including but not limited to, pipes, wires, pumps, switches, adaptors, covers, etc.

6. THE WARRANTIES STATED ABOVE ARE EXCLUSIVE AND IN LIEU OF ALL OTHER EXPRESSED OR IMPLIED WARRANTIES INCLUDING, BUT NOT LIMITED TO THE IMPLIED WARRANTIES OF MERCHANTABILITY, NON INFRINGEMENT OF THIRD PARTY RIGHTS AND OF FITNESS FOR A PARTICULAR PURPOSE.

UNDER NO CIRCUMSTANCES SHALL FGAI BE LIABLE FOR ANY INDIRECT, INCIDENTAL, SPECIAL, PUNITIVE OR CONSEQUENTIAL DAMAGES OR OTHER ECONOMIC LOSS, WHETHER BASED ON BREACH OF WARRANTY, BREACH OF CONTRACT, TORT OR OTHERWISE, EVEN IF FGAI HAS BEEN ADVISED OF THE POSSIBILITY OF SUCH DAMAGE. IN NO EVENT SHALL FGAI'S LIABILITY EXCEED THE PURCHASE PRICE OF THE SYSTEM.

Some states do not allow limitations on how long an implied warranty lasts, or the exclusion or limitation of incidental or consequential damages, so the above exclusions or limitations may not apply. Residents of California and Quebec are not required to register the System in order to obtain all of the rights and remedies applicable to this Limited Warranty.

7. DISPUTE RESOLUTION – In the event of any dispute with FGAI, Purchaser agrees to first contact FGAI by phone at (888) 888-3424, by e-mail at serviceHVAC@fujitsugeneral.com, or by U.S. Mail at Fujitsu General America Inc., ATTN: Customer Service, 353 Route 46 West, Fairfield NJ 07004, and attempt to resolve the dispute informally by providing the following information: name, address, contact information and the nature of the dispute. In the event that FGAI is unable to resolve a dispute within 90 days of Purchaser's contacting FGAI, the parties agree to resolve any claim, dispute, or controversy arising out of or in connection with this Limited Warranty (the "Claims") by binding arbitration.

8. ARBITRATION – The laws of the State of New Jersey shall govern this Limited Warranty and all of its terms and conditions, without giving effect to any principles of conflicts of laws. All actions at law or in equity arising out of or relating to this Limited Warranty shall be submitted to confidential arbitration in Fairfield, New Jersey, under the rules then prevailing of the American Arbitration Association. To the fullest extent permitted by applicable law, no such arbitration shall be joined to an arbitration involving any other person or entity subject to this Limited Warranty, whether through class arbitration proceedings or otherwise. Except to the extent prohibited by applicable law, Purchaser agrees she/he will not bring any Claim more than one (1) year after the cause of action has accrued. If the arbitrator decides in favor of Purchaser, the award may include Purchaser's costs of arbitration, including reasonable attorneys' fees and reasonable fees for any expert and other witnesses. Any award rendered by the arbitrator may be entered in any court of competent jurisdiction.

9. SEVERABILITY – If a term or condition of this Limited Warranty is held invalid, void or unenforceable, such holding shall not affect any other terms or condition of this Limited Warranty.

10. MODIFICATION – No term or condition of this Limited Warranty may be amended or modified except by an instrument in writing executed by the President or Vice President of FGAI. FGAI holds the right to amend the terms and conditions of this Limited Warranty from time to time without notice.

FUJITSU GENERAL AMERICA, INC.
353 Route 46 West, Fairfield, NJ 07004

July 2021

INSTALLATION INSTRUCTIONS
low voltage control electric unit heaters

⚠ WARNING

1. Disconnect power supply before making wiring connections to prevent electrical shock and equipment damage.
2. All units must be wired strictly in accordance with wiring diagram furnished with the unit. Any wiring different from the wiring diagram could result in a hazard to persons and property.
3. All wiring must be done with a wiring material having a temperature rating of at least 105°C.

IMPORTANT

1. The use of this manual is specifically intended for a qualified installation and service agency. All installation and service of these kits must be performed by a qualified installation and service agency.
2. These instructions must also be used in conjunction with the Installation and Service Manual that originally shipped with the appliance, in addition to any other accompanying component supplier literature.

Description

The 240/24 or 208/24 volt transformer relay is rated for resistive loads up to 6000 watts or motor loads up to twelve amps. Units with 480 or 600V supply voltage (33 or 34 power code) come standard with a 480 or 600V to 240V transformer making the low voltage control kit compatible with power code 33 or 34. Wiring of this control kit should only be performed by a qualified electrician.

Description	Part Number	
	240/24V	208/24V
Transformer Relay	5H0709830001	5H0709830002

Installation and wiring - HER models

1. Disconnect power supply before making wiring connections to prevent electrical shock and equipment damage. All units must be wired strictly in accordance with wiring diagram furnished with the unit.
2. Open the hinge bottom panel.
3. Insert the transformer relay to the back panel with the locknut, as shown in Figure 1.
4. Fasten the transformer relay to the back panel with the locknut, as shown in Figure 1.
5. Wire transformer relay per Figure 2. Be sure to connect yellow wire to the power block terminal where the fan motor lead is tied in at. Refer to wiring diagram on the inside of bottom pan.

Any damage to, or failure of Modine units caused by incorrect wiring of the units is not covered by Modine's standard warranty.

Figure 1
Installation - HER models

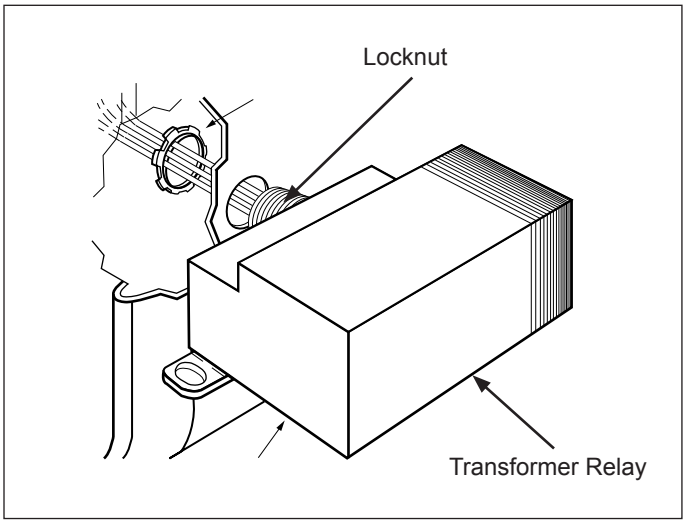

Figure 2
Wiring Diagram - HER models

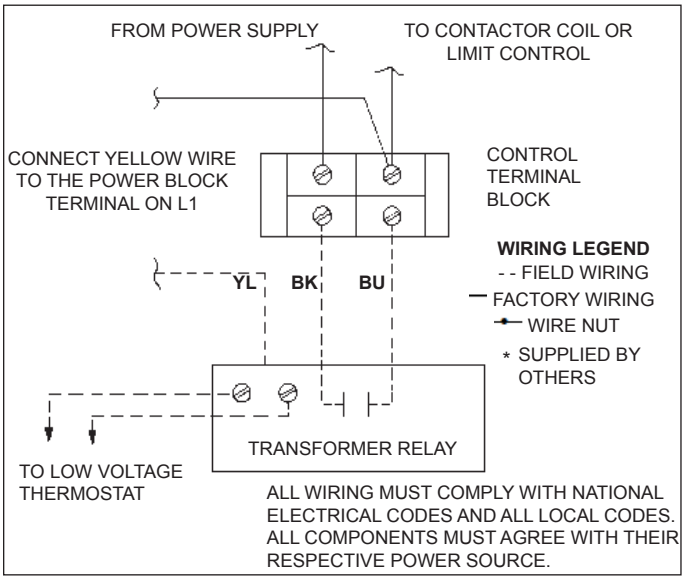

Installation and wiring - VE and PTE models

1. Disconnect power supply before making wiring connections to prevent electrical shock and equipment damage. All units must be wired strictly in accordance with wiring diagram furnished with the unit.
2. Remove cover from power junction box..
3. Insert the transformer relay lead wires into the control wiring hole in the power junction box.
4. Fasten the transformer relay to the power junction box with the locknut

Installation and wiring - VE and PTE models

5. Wire the transformer relay per Figures 4, 5, or 6. Refer to wiring diagram on the inside of the power junction box cover
6. For the VE & PTE 300, 400 and 500 only, a jumper wire (14 ga. minimum) must be added between the "L" and "H" terminals of the control terminal block.

Figure 3
Installation - VE and PTE models

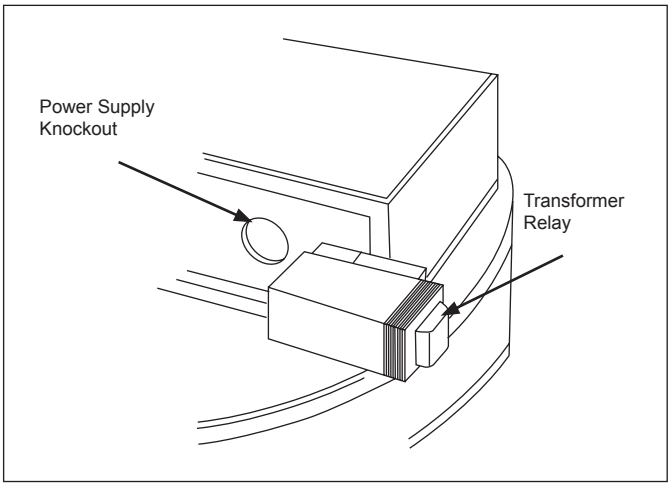

Figure 4
Wiring Diagram
Models VE50-250 - 208 or 240V Power Supply

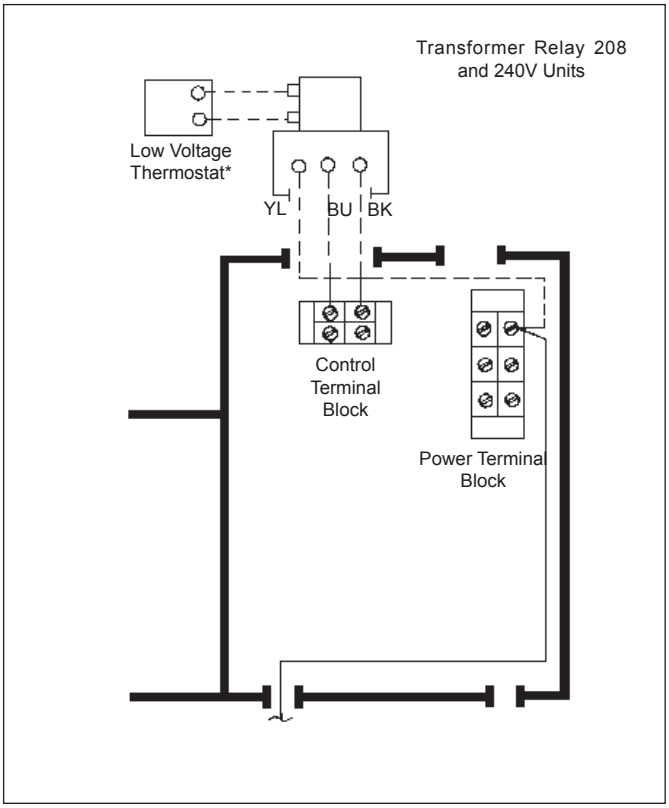

Figure 5
Wiring Diagram
Models VE50-250 - 480V Power Supply

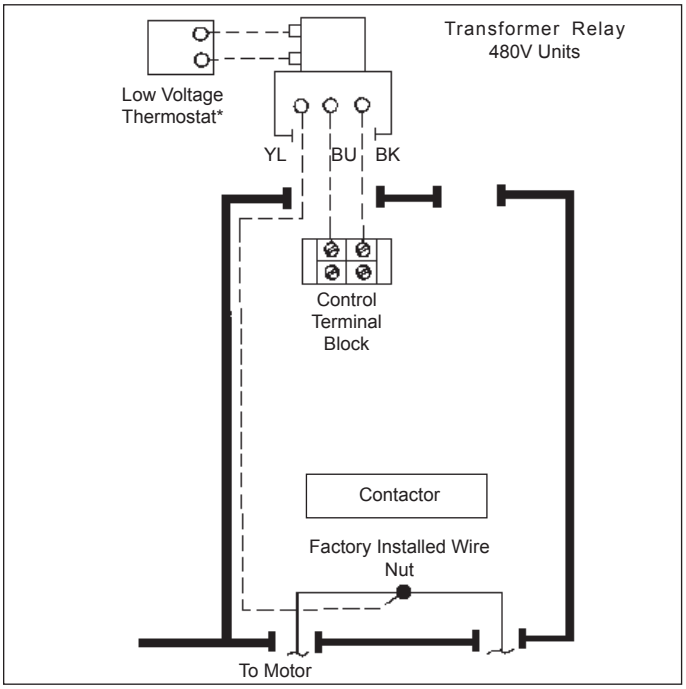

Figure 6
Wiring Diagram
Models VE300, 400, 500/PTE300, 400, & 500

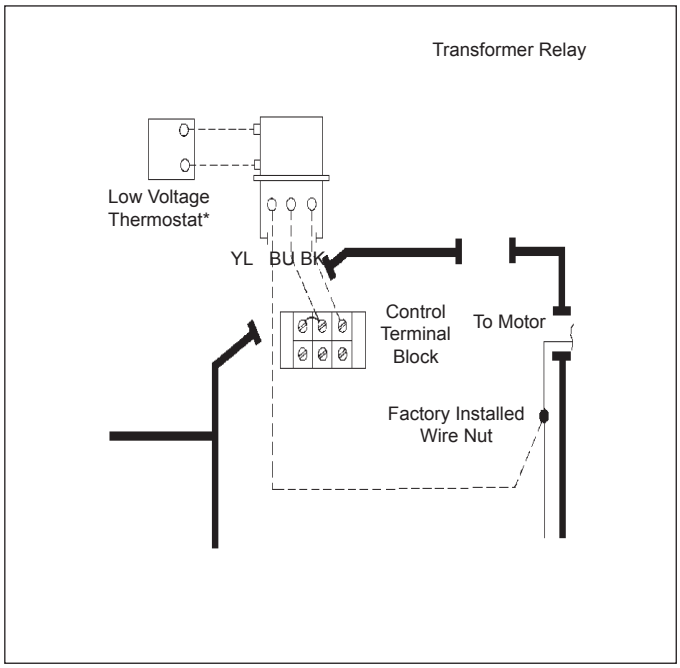

Modine Manufacturing Company
1500 DeKoven Avenue
Racine, WI 53403
Phone: 1.800.828.4328 (HEAT)
www.modinehvac.com

© Modine Manufacturing Company 2021

2-525.6
5H0756900000

December, 2019

INSTALLATION AND SERVICE MANUAL
electric unit heaters
model HER

⚠ WARNING

Improper installation, adjustment, alteration, service or maintenance can cause property damage, injury or death, and could cause exposure to substances which have been determined by various state agencies to cause cancer, birth defects or other reproductive harm. Read the installation, operating and maintenance instructions thoroughly before installing or servicing this equipment.

IMPORTANT

The use of this manual is specifically intended for a qualified installation and service agency. A qualified installation and service agency must perform all installation and service of these appliances.

FOR YOUR SAFETY

The use and storage of gasoline or other flammable vapors and liquids in open containers in the vicinity of this appliance is hazardous.

Inspection on Arrival

1. Inspect unit upon arrival. In case of damage, report it immediately to transportation company and your local Modine sales representative.
2. Check rating plate on unit to verify that power supply and motor specification requirements meets available electric power at the point of installation.
3. Inspect unit upon arrival for conformance with description of product ordered (including specifications where applicable).

General Information

Installation and wiring of these electric unit heaters must conform to all applicable local codes and the National Electric Code. Wiring of these electric unit heaters should only be performed by a qualified electrician.

Table of Contents

General Information 1
Special Precautions / Important Information 2
SI (Metric) Conversion Factors 2
Unit Location 3
Unit Mounting 3
Installation 4
Electrical Connections 4
Operation 5
Operating Sequence 5
Dimensional Data 6
Performance Data 6
Motor Specifications 6
General Maintenance & Troubleshooting. 7
Warranty ..... Back Page

THIS MANUAL IS THE PROPERTY OF THE OWNER.
PLEASE BE SURE TO LEAVE IT WITH THE OWNER WHEN YOU LEAVE THE JOB.

SPECIAL PRECAUTIONS / IMPORTANT INSTRUCTIONS

THE INSTALLATION AND MAINTENANCE INSTRUCTIONS IN THIS MANUAL MUST BE FOLLOWED TO PROVIDE SAFE, EFFICIENT AND TROUBLE-FREE OPERATION. IN ADDITION, PARTICULAR CARE MUST BE EXERCISED REGARDING THE SPECIAL PRECAUTIONS LISTED BELOW. FAILURE TO PROPERLY ADDRESS THESE CRITICAL AREAS COULD RESULT IN PROPERTY DAMAGE OR LOSS, PERSONAL INJURY, OR DEATH. THESE INSTRUCTIONS ARE SUBJECT TO ANY MORE RESTRICTIVE LOCAL OR NATIONAL CODES.

HAZARD INTENSITY LEVELS

1. **DANGER:** Indicates an imminently hazardous situation which, if not avoided, WILL result in death or serious injury.
2. **WARNING:** Indicates a potentially hazardous situation which, if not avoided, COULD result in death or serious injury.
3. **CAUTION:** Indicates a potentially hazardous situation which, if not avoided, MAY result in minor or moderate injury.
4. **IMPORTANT:** Indicates a situation which, if not avoided, MAY result in a potential safety concern.

⚠ DANGER

Appliances must not be installed where they may be exposed to a potentially explosive or flammable atmosphere.

⚠ WARNING

1. Disconnect power supply before making wiring connections to prevent electrical shock and equipment damage.
2. All appliances must be wired strictly in accordance with wiring diagram furnished with the appliance. Any wiring different from the wiring diagram could result in a hazard to persons and property.
3. Ensure that the supply voltage to the appliance, as indicated on the serial plate, is not 5% greater than rated voltage.
4. When servicing or repairing this equipment, use only factory-approved service replacement parts. A complete replacement parts list may be obtained by contacting Modine Manufacturing Company. Refer to the rating plate on the appliance for complete appliance model number, serial number, and company address. Any substitution of parts or controls not approved by the factory will be at the owner's risk.
5. Do not operate any heater if it malfunctions. Disconnect power at service panel and have heater inspected by a qualified installation and service agency.
6. Do not insert or allow foreign objects to enter any ventilation or exhaust opening.
7. Use this heater only as described in this manual.
8. The heater is hot when in use. To avoid burns, do not let bare skin toiuch hot surfaces.

⚠ CAUTION

1. All literature shipped with this unit should be kept for future use for servicing or service diagnostics. Do not discard any literature shipped with this unit.
2. Be sure no obstructions block air intake or discharge of the appliance.
3. Do not install appliance outdoors.
4. Do not install appliance closer than 12 inches to combustible materials in any direction.
5. The bottom of the appliance for HER 30-50: must be at least - 6ft USA & 8ft Canada, HER 75-250: - 8ft.
6. Do not attach duct work, air filters, or polytubes to any appliance.
7. Ensure that the supply voltage to the appliance, as indicated on the serial plate, is not 5% less than the rated voltage.
8. Do not reuse any electrical component which has been wet. Such component must be replaced.
9. **SAVE THESE INSTRUCTIONS**

IMPORTANT

To check most of the Possible Remedies in the trouble-shooting guide listed in Table 7.1, refer to the applicable sections of the manual.

SI (METRIC) CONVERSION FACTORS

Table 2.1

To Convert	Multiply By	To Obtain
"W.C.	0.24	kPa
psig	6.893	kPa
°F	(°F-32) x 0.555	°C
inches	25.4	mm
feet	0.305	meters
CFM	0.028	m^3/min

To Convert	Multiply By	To Obtain
CFH	1.699	m^3/min
Btu/ft^3	0.0374	mJ/m^3
pound	0.453	kg
Btu/hr	0.000293	kW/hr
gallons	3.785	liters
psig	27.7	"W.C.

INSTALLATION

UNIT LOCATION

⚠ DANGER

Appliances must not be installed where they may be exposed to a potentially explosive or flammable atmosphere.

⚠ CAUTION

1. Be sure no obstructions block air intake or discharge of the appliance.
2. Do not install appliance outdoor, wet, or moist locations.

In locating units, consider general space-heating requirements of the area. Unit heaters should be located so they discharge air nearly parallel to exposed walls. Arrange units so they do not blow directly at occupants. Interference of air streams by columns, beams, partitions, or other obstructions should be avoided as much as possible.

In multiple unit installations, arrange units so that each supports the air stream of the next unit, thus creating circulatory air movement in the area. See Figure 3.1. A large portion of the heated air should be directed toward the side of the building exposed to prevailing winds.

Height at which unit heaters are installed is critical. Maximum mounting heights for all units are listed in Table 6.2. The maximum mounting height for any unit is that height above which the unit will not deliver heated air to the floor. The maximum mounting heights must not be exceeded in order to assure maximum comfort.

Figure 3.1 - Typical Unit Locations

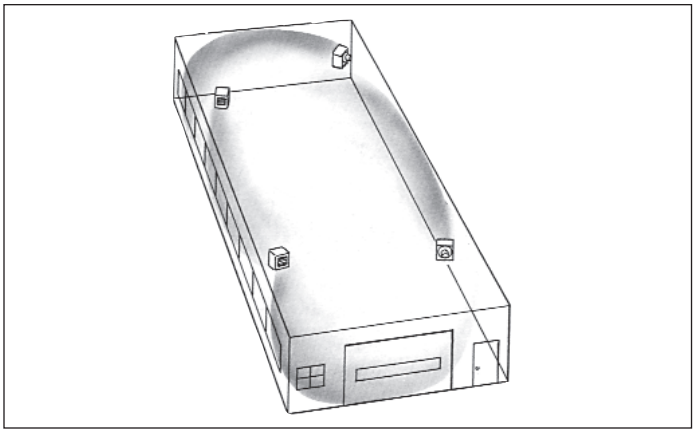

UNIT MOUNTING

⚠ CAUTION

1. Do not install appliance closer than 12 inches to combustible materials in any direction.
2. The bottom of the appliance for HER 30-50: must be at least - 6ft USA & 8ft Canada, HER 75-250: - 8ft..
3. Do not attach duct work, air filters, or polytubes to any appliance.

It is recommended that adequate service access in excess of 18 inches be provided for the motor and fan.

Be sure the means of suspension is adequate to support the weight of the unit **(see note)**. Clearances to combustibles as specified above must be strictly maintained. Do not install unit heater above the maximum mounting height shown in Table 6.2 or below HER 30-50: - 6ft USA, 8ft Canada & HER 75-250: - 8ft. Two tapped holes (3/8" - 16) in the top of the unit are provided for unit heater suspension. Suspension can be made with threaded rods, pipes, or ceiling hanger brackets furnished by others. See Figure 6.1 for hanger hole locations and Figure 3.3 for suspension methods.

NOTE: A pipe hanger adapter kit, shown in Figure 3.3 is available as an accessory from Modine, or can be self-fabricated. Kit consists of two drilled 3/4" I.P.S. pipe caps and two 3/8" - 16 x 1-3/4" capscrews to facilitate threaded-pipe suspension. One kit is required for mounting each unit.

Wall-Mounting Bracket

For easier installation of Model HER electric unit heaters, where ceiling suspension is not feasible, a wall-mounting bracket kit is available. The bracket saves installation time, has a built-in wall clearance, and provides an inexpensive and convenient wall mounting method. The one-point suspension, shown in Figure 3.2, permits swiveling the unit 90 degrees horizontally for most effective air direction. Refer to separate bulletin furnished with the kit for bracket assembly and installation. Refer to Table 6.2 for maximum mounting height. Minimum mounting height is HER 30-50: - 6ft USA, 8ft Canada & HER 75-250: - 8ft.

Figure 3.1 - Typical Unit Locations

Figure 3.3 - Ceiling Suspension Methods

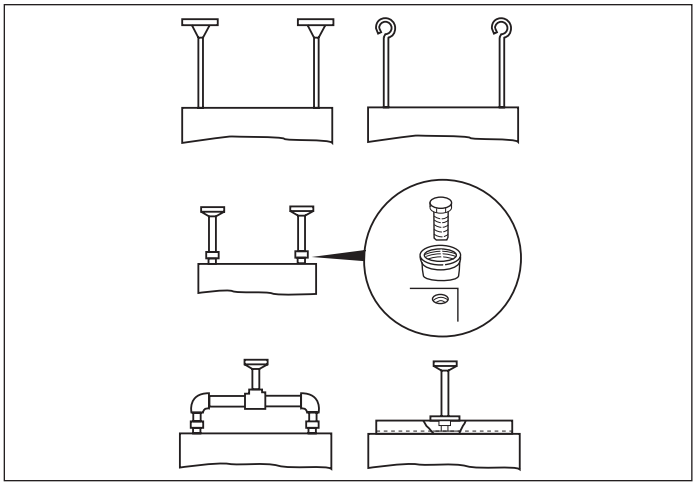

Electrical Connections

⚠ WARNING

1. Disconnect power supply before making wiring connections to prevent electrical shock and equipment damage.
2. All appliances must be wired strictly in accordance with wiring diagram furnished with the appliance. Any wiring different from the wiring diagram could result in a hazard to persons and property.
3. Ensure that the supply voltage to the appliance, as indicated on the serial plate, is not 5% greater than rated voltage.

⚠ CAUTION

1. Ensure that the supply voltage to the appliance, as indicated on the serial plate, is not 5% less than the rated voltage.

1. Installation of wiring must conform with local building codes, or in the absence of local codes, with the National Electric Code ANSI/NFPA 70 - Latest Edition. Unit must be electrically grounded in conformance to this code. In Canada, wiring must comply with CSA C22.1, Part 1, Electrical Code.
2. Two copies of the unit wiring diagram are provided with each unit. One is located in the bottom control compartment access panel and the other is supplied in the literature packet. Refer to this diagram for all wiring connections.
3. Make sure all multi-voltage components (motors, transformers, etc.) are wired in accordance with the power supply voltage.
4. The power supply to the unit must be protected with a fused or circuit breaker switch.
5. The power supply must be within 5% of the voltage rating and each phase must be balanced within 2% of each other. If not, advise the utility company.
6. External electrical service connections that must be installed include:
   a. Supply power connection (208, 240, 480 or 600 volts).
   b. Connection of thermostats, or any other accessory control devices that may be supplied.
7. Additional electrical wiring details are as follows:
   1. Control wiring should be No. 14 AWG (American Wire Gauge).
   2. All 480/600 volt units have built-in transformers and fuses.
   3. All contactor coils are rated at 208-240 volts.
   4. Fuse blocks with fuses are factory installed on all 480/600 volt three-phase units to protect motor and transformer.
   5. Models HER200 and HER250 with 208- or 240-volt three phase power supply have two contactors.

Figure 4.1 - Control Panel Viewed from Unit Bottom

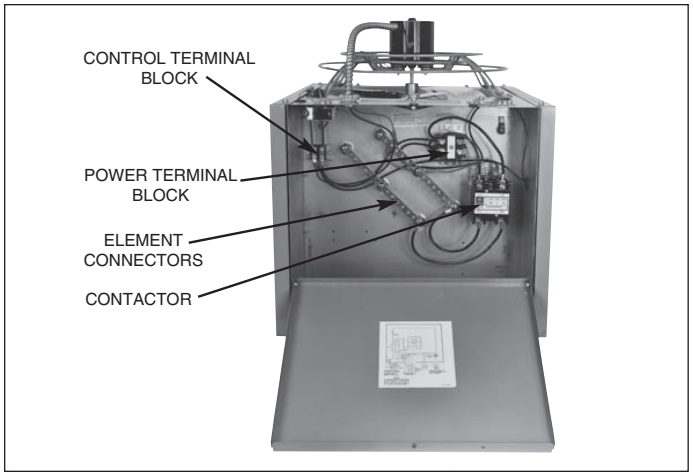

Figure 4.2 - Rear View with Unit Mounted T-stat

Summer/Winter Switch

A summer/winter toggle switch kit is available for field installation. In the winter position the thermostat will cycle the fan on and off with the heating elements. In the summer position the fan runs continuously while the heating elements are controlled by the thermostat. Refer to separate bulletin included in the kit for installation and wiring.

Table 4.1 - Wiring Data

Model Size	Power Code	Supply Voltage	Control Box Volume (cm^3)
30	11	208V/1ph	12,076.84
	12	240V/1ph	
	31	208V/3ph	
	32	240V/3ph	
	33	480V/3ph	
	34	600V3ph	
50	11	208V/1ph	
	12	240V/1ph	
	31	208V/3ph	
	32	240V/3ph	
	33	480V/3ph	
	34	600V/3ph	
75	11	208V/1ph	17,563.11
	12	240V/1ph	
	31	208V/3ph	
	32	240V/3ph	
	33	480V/3ph	
	34	600V/3ph	
100	11	208V/1ph	
	12	240V/1ph	
	31	208V/3ph	
	32	240V/3ph	
	33	480V/3ph	
	34	600V/3ph	
125	31	208V/3ph	
	32	240V/3ph	
	33	480V/3ph	
	34	600V3/ph	
150	31	208V/3ph	
	32	240V/3ph	
	33	480V/3ph	
	34	600V/3ph	
200	31	208V/3ph	30,331.21
	32	240V/3ph	
	33	480V/3ph	
	34	600V3ph	
250	31	208V/3ph	
	32	240V/3ph	
	33	480V/3ph	
	34	600V/3ph	

Figure 5.1 - Exposed Side of Electric Unit Heater

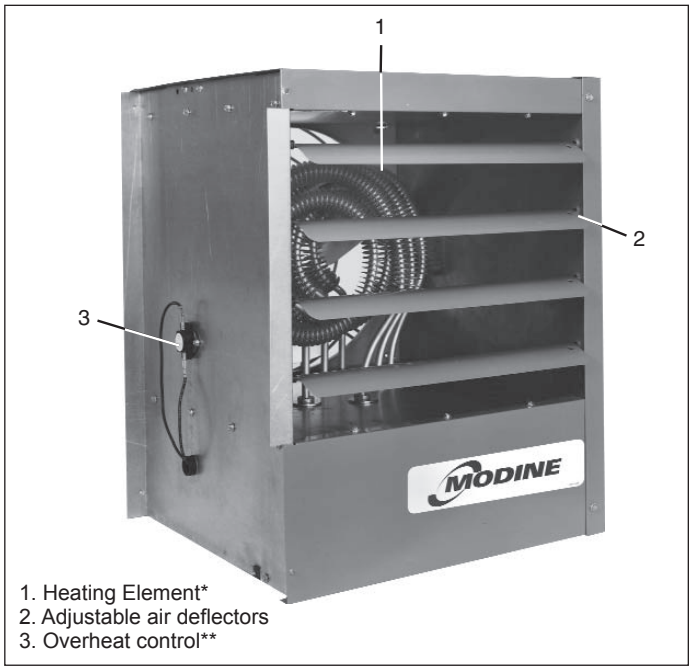

* Heating Elements are flipped in HER 30 and HER 50.

** Overheat Control is located on opposite side for HER 30 and HER 50

⚠ WARNING

The heater must be properly installed before use.

IMPORTANT

Start-up and adjustment procedures must be performed by a qualified service agency.

Prior to Operation

Although this unit has been inspected and tested at the factory, the following procedures should be performed to assure proper on-site operation:

1. Check fan clearance. Fan should not contact casing when spun by hand.
2. Check all electrical connections to be sure they are secure, and in accordance with the wiring diagram.
3. Check firmness of unit suspension. Tighten all fasteners, if necessary.
4. Make sure fuses are installed in units that require them.

Safety Devices

The overheat control, mounted on the right inner side panel for HER 30-50 and left inner side panel for HER 75-250 (See Figure 5.1), will interrupt power to the unit contactor in the event of overheating. It is a single-pole, single-throw switch, with an automatic reset. The switch will permit the motor to continue operation and cool the heater while power to the elements is interrupted. **This overheat control should operate only when something is seriously wrong with the unit. When this control operates, correct the difficulty immediately or serious and permanent damage may result.**

The motor for the circulating air fan has internal thermal overload protection. If for any reason the motor overheats, the thermal protector will shut it off. The motor will restart automatically when it has cooled.

Initial Start-Up

1. Set thermostat above room temperature.
2. Turn on power to the unit.
3. Adjust the air deflector blades for desired heat distribution. All horizontal blades should be kept open a minimum of 45° as measured from vertical.
4. Run the unit through several cycles by raising and lowering the thermostat setting to assure proper sequence of operation.

Operating Sequence

The operation of Modine electric unit heaters is governed by an electrical contactor which is controlled by a thermostat. The contactor completes the electric circuit to the heating elements when the thermostat “calls” for heat. The fan motor is also activated when the thermostat “calls” for heat. When the thermostat is satisfied, the fan motor stops and the contactor opens the circuit to the heating elements.

DIMENSIONAL / PERFORMANCE DATA

Figure 6.1 - Dimensions (inches)

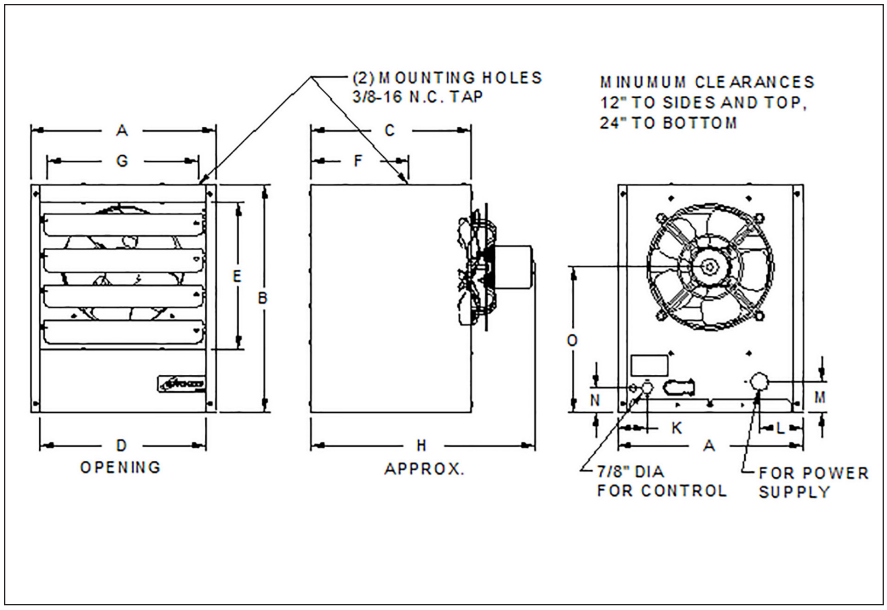

Table 6.1 - Outline Dimensions (inches)

Dimension	Model Size			
	30 - 50	75	100 - 150	200 - 250
A	14-1/4	16-7/8	16-7/8	18-7/8
B	17-1/2	20-7/8	20-7/8	24
C	12-1/4	14-3/4	14-3/4	20
D	12-7/8	14-1/2	14-1/2	16-1/2
E	11-3/8	13	13	16
F	7-1/2	8-7/8	9-5/8	12-5/8
G	11-5/8	13-1/2	13-1/2	15-1/2
H	17-1/4	20-1/4	21-1/4	26-1/2
K	2-1/4	2-1/4	2-1/4	3-1/4
L	3-3/8	3-1/4	3-1/4	4-1/4
M	2-3/8	2-1/4	2-1/4	2-1/2
N	1-7/8	2-1/4	2-1/4	2-1/2
O	11-1/8	12-3/4	12-3/4	14-1/2
Fan Dia.	9	12	12	14
Approx. Shipping Wt. (lbs.)*	34	52	74	98

Table 6.2 - Performance Data

Model Size	Heating Capacity		Air Data ①			
	kW	Btu/hr	Inlet Airflow (CFM)	Temp Rise (°F)	Heat Throw (ft.)	Max. Mounting Height (ft.)
30	3	10,200	380	25	12	8
50	5	17,100	380	42	12	8
75	7.5	25,600	530	45	14	8
100	10	34,100	830	38	20	9
125	12.5	42,700	830	48	20	10
150	15	51,200	830	57	20	10
200	20	68,200	1300	49	25	11
250	25	85,300	1300	61	25	12

① With 70°F ambient air. and louvers directed to the floor at 45°.

Table 6.3 - Motor Specifications

Model Size	HP	Voltage	RPM	Motor Type	Bearing Type
30 - 75	1/40	208-230V/60Hz/1ph	1550	Totally Enclosed, Shaded Pole, Thermal Overload Protection	Sleeve
100 - 250	1/15		1050		

GENERAL MAINTENANCE / TROUBLESHOOTING

⚠ WARNING

1. When servicing or repairing this equipment, use only factory approved service replacement parts. A complete replacement parts list may be obtained by contacting Modine Manufacturing Company. Parts not approved by the factory will be at the owner's risk.
2. Do not operate any heater if it malfunctions. Disconnect power at service panel and have heater inspected by a qualified installation and service agency.

Replacement parts can be obtained from Modine by submitting the model number, power code, control code and serial number shown on the rating plate attached to the unit, along with a description of the part.

⚠ CAUTION

Do not reuse any electrical component which has been wet. Such component must be replaced.

NOTE: To check most of the Possible Remedies in the trouble-shooting guide listed in Table 7.1, refer to the applicable sections of the manual.

Routine Unit Maintenance

Under average conditions, it is recommended that unit heaters be serviced at least once a year and checked out prior to the heating season. In excessively dirty atmospheres, service should be performed more often.

1. **Disconnect power supply to the unit before performing any of the following maintenance or inspection procedures & allow heating elemt of heater to cool.**
2. Check all components and wiring inside the unit for firm connections and/or wear.
3. Tighten fan guard and motor bracket. Check fan for proper clearance, free rotation, and firm connection to motor shaft. Clean fan blade with detergent or compressed air.
4. Fan motor is permanently lubricated for normal operation. Under severe conditions, lubricate with non-detergent SAE 20 motor oil.
5. Routine cleaning of the unit casing and louvers is recommended to remove dirt, grease, or corrosive substances that may damage the finish. Rusted or corroded spots on the louvers or casing should be sanded and repainted. To remove, push louvers against retaining coil spring and pull out at opposite tapered end.
6. Check entire electrical system before every heating season.

Table 7.1 - Troubleshooting

PROBLEM	POSSIBLE CAUSE(S)	REMEDY
Unit does not operate	1. Electric circuit in open position. 2. Blown fuses in control compartment. 3. Defective or incorrect wiring. 4. Defective thermostat or switch. 5. Defective or burned out control transformer.	1. a. Turn on switch or thermostat. b. Move thermostat to higher setting. c. Replace fuse or reset disconnect switch. 2. Replace fuses. 3. Check wiring and connections. Refer to diagram inside control panel. 4. Check continuity with volt-ohmmeter. Replace defective part if necessary. 5. Check secondary voltage with voltmeter. Replace if necessary.
Fan operates but element does not heat	1. Power interrupted by overheat control. 2. Summer-winter switch in summer position. 3. Defective or incorrect wiring. 4. Blown element fuses on HER200 and HER250 w/208 or 240V-3ø power supply.	1. a. Not enough air volume over elements. Louvers must be open at least 45°. b. Check motor rpm against nameplate rating. Replace motor if speed is too slow. c. Defective limit control. Check wiring and connections. Check continuity through control. Replace if necessary. 2. Change switch position. 3. Check all wiring and connections. See diagram inside control compartment. 4. Replace element fuses.
Elements heat but fan does not operate	1. Fan motor failure. 2. Summer-winter switch defective or improperly wired. 3. Defective or incorrect wiring.	1. a. Check for loose electrical connections. Check wiring with diagram in control compartment. b. Repair or replace burned out defective motor. c. Voltage too high or too low. Check voltage with voltmeter. 2. Check for continuity with volt-ohmmeter. Replace if necessary. 3. Check all wiring and connections. See diagram inside control compartment.
Insufficient heat	1. Too few units for heat loss. 2. Unit mounted too high. 3. Fan operates backwards. 4. Burned out element.	1. Add more units or increase size of units. 2. Lower units. 3. Repair, replace motor or reverse fan rotation. 4. Disconnect internal wiring and check element resistance with ohmmeter.

COMMERCIAL WARRANTY

Seller warrants its products to be free from defects in material and workmanship, EXCLUSIVE, HOWEVER, of failures attributable to the use of materials substituted under emergency conditions for materials normally employed. This warranty covers replacement of any parts furnished from the factory of Seller, but does not cover labor of any kind and materials not furnished by Seller, or any charges for any such labor or materials, whether such labor, materials or charges thereon are due to replacement of parts, adjustments, repairs, or any other work done. This warranty does not apply to any equipment which shall have been repaired or altered outside the factory of Seller in any way so as, in the judgment of Seller, to affect its stability, nor which has been subjected to misuse, negligence, or operating conditions in excess of those for which such equipment was designed. This warranty does not cover the effects of physical or chemical properties of water or steam or other liquids or gases used in the equipment.

BUYER AGREES THAT SELLER'S WARRANTY OF ITS PRODUCTS TO BE FREE FROM DEFECT IN MATERIAL AND WORKMANSHIP, AS LIMITED HEREIN, SHALL BE IN LIEU OF AND EXCLUSIVE OF ALL OTHER WARRANTIES, EITHER EXPRESS OR IMPLIED, WHETHER ARISING FROM LAW, COURSE OF DEALING, USAGE OF TRADE, OR OTHERWISE, **THERE ARE NO OTHER WARRANTIES, INCLUDING WARRANTY OF MERCHANTABILITY OR FITNESS FOR PURPOSE, WHICH EXTEND BEYOND THE PRODUCT DESCRIPTION CONFIRMED BY BUYER AND SELLER AS OF THE DATE OF FINAL AGREEMENT.**

This warranty is void if the input to the product exceeds the rated input as indicated on the product serial plate by more than 5% on gas-fired and oil-fired units, or if the product in the judgment of SELLER has been installed in a corrosive atmosphere, or subjected to corrosive fluids or gases, been subjected to misuse, negligence, accident, excessive thermal shock, excessive humidity, physical damage, impact, abrasion, unauthorized alterations, or operation contrary to SELLER'S printed instructions, or if the serial number has been altered, defaced or removed.

BUYER'S REMEDY FOR BREACH OF WARRANTY, EXCLUSIVE OF ALL OTHER REMEDIES PROVIDED BY LAW, IS LIMITED TO REPAIR OR REPLACEMENT AT THE FACTORY OF SELLER, ANY COMPONENT WHICH SHALL, WITHIN THE APPLICABLE WARRANTY PERIOD DEFINED HEREIN AND UPON PRIOR WRITTEN APPROVAL, BE RETURNED TO SELLER WITH TRANSPORTATION CHARGES PREPAID AND WHICH THE EXAMINATION OF SELLER SHALL DISCLOSE TO HAVE BEEN DEFECTIVE; EXCEPT THAT WHEN THE PRODUCT IS TO BE USED BY BUYER AS A COMPONENT PART OF EQUIPMENT MANUFACTURED BY BUYER, BUYER'S REMEDY FOR BREACH, AS LIMITED HEREIN, SHALL BE LIMITED TO ONE YEAR FROM DATE OF SHIPMENT FROM SELLER. FOR GAS-FIRED PRODUCTS INSTALLED IN HIGH HUMIDITY APPLICATIONS AND UTILIZING STAINLESS STEEL HEAT EXCHANGERS, BUYER'S REMEDY FOR BREACH, AS LIMITED HEREIN, SHALL BE LIMITED TO TEN YEARS FROM DATE OF SHIPMENT FROM SELLER.

These warranties are issued only to the original owner-user and cannot be transferred or assigned. No provision is made in these warranties for any labor allowance or field labor participation. Seller will not honor any expenses incurred in its behalf with regard to repairs to any of Seller's products. No credit shall be issued for any defective part returned without proper written authorization (including, but not limited to, model number, serial number, date of failure, etc.) and freight prepaid.

OPTIONAL SUPPLEMENTAL WARRANTY
Provided a supplemental warranty has been purchased, Seller extends the warranty herein for an additional four (4) years on certain compressors. Provided a supplemental warranty has been purchased, Seller extends the warranty herein for an additional four (4) years or nine (9) years on certain heat exchangers.

EXCLUSION OF CONSUMABLES & CONDITIONS BEYOND SELLER'S CONTROL
The above referenced warranty shall not be applicable to any of the following items: refrigerant gas, belts, filters, fuses and other items consumed or worn out by normal wear and tear or conditions beyond Seller's control, including (without limitation as to generality) polluted or contaminated or foreign matter contained in the air or water utilized for heat exchanger (condenser) cooling or if the failure of the part is caused by improper air or water supply, or improper or incorrect sizing of power supply.

Component Applicable Models	**"APPLICABLE WARRANTY PERIOD"**
Heat Exchangers Gas-Fired Units except PSH/BSH	TEN YEARS FROM DATE OF FIRST BENEFICIAL USE BY BUYER OR ANY OTHER USER, WITHIN TEN YEARS FROM DATE OF RESALE BY BUYER OR ANY OTHER USER, WITHIN TEN YEARS FROM DATE OF RESALE BY BUYER IN ANY UNCHANGED CONDITION, OR WITHIN ONE HUNDRED TWENTY-SIX MONTHS FROM DATE OF SHIPMENT FROM SELLER, WHICHEVER OCCURS FIRST
Heat Exchangers Low Intensity Infrared Units **Compressors** Condensing Units for Cassettes	FIVE YEARS FROM DATE OF FIRST BENEFICIAL USE BY BUYER OR ANY OTHER USER, WITHIN FIVE YEARS FROM DATE OF RESALE BY BUYER OR ANY OTHER USER, WITHIN FIVE YEARS FROM DATE OF RESALE BY BUYER IN ANY UNCHANGED CONDITION, OR WITHIN SIXTY-SIX MONTHS FROM DATE OF SHIPMENT FROM SELLER, WHICHEVER OCCURS FIRST
Burners Low Intensity Infrared Units **Other** Components excluding Heat Exchangers, Coils, Condensers, Burners, Sheet Metal	TWO YEARS FROM DATE OF FIRST BENEFICIAL USE BY BUYER OR ANY OTHER USER, WITHIN TWO YEARS FROM DATE OF RESALE BY BUYER IN ANY UNCHANGED CONDITION, OR WITHIN THIRTY MONTHS FROM DATE OF SHIPMENT FROM SELLER, WHICHEVER OCCURS FIRST
Heat Exchangers/Coils Indoor and Outdoor Duct Furnaces and System Units, PSH/BSH, Steam/Hot Water Units, Oil-Fired Units, Electric Units, Cassettes, Vertical Unit Ventilators **Compressors** Vertical Unit Ventilators **Burners** High Intensity Infrared Units **Sheet Metal Parts** All Products	ONE YEAR FROM DATE OF FIRST BENEFICIAL USE BY BUYER OR ANY OTHER USER, WITHIN ONE YEAR FROM DATE OF RESALE BY BUYER IN ANY UNCHANGED CONDITION, OR WITHIN EIGHTEEN MONTHS FROM DATE OF SHIPMENT FROM SELLER, WHICHEVER OCCURS FIRST

As Modine Manufacturing Company has a continuous product improvement program, it reserves the right to change design and specifications without notice.

Modine Manufacturing Company
1500 DeKoven Avenue
Racine, WI 53403
Phone: 1.800.828.4328 (HEAT)
www.modinehvac.com

© Modine Manufacturing Company 2019

SUBCONTRACTOR WARRANTY FORM

PROJECT: Madera WHSE

LOCATION: S Schnoor Avenue & W Almond Avenue

OWNER: Madera Industrial WHSE, LLC

GENERAL CONTRACTOR: Valley Air Conditioning & Repair, Inc

We, Valley Air Conditioning, Subcontractor for DBKO Design + Build, L, do hereby warrant that all labor and materials furnished and work performed in conjunction with the above referenced project are in accordance with the Contract Documents and authorized modifications thereto, and will be free from defects due to defective materials or workmanship for a period of 1 year(s) from the Date of Substantial Completion.

Should any defect develop during the warranty period due to improper materials, workmanship or arrangement, the defect, including adjacent work displaced, shall be made good by the undersigned at no expense to the Owner.

The Owner will give Subcontractor written notice of defective work. Should Subcontractor fail to correct defective work within 60 days after receiving written notice, the Owner may, at his option, correct defects and charge Subcontractor costs for such correction. Subcontractor agrees to pay such charges upon demand.

FOR: HVAC	FOR:
BY: Valley Air Conditioning & Repair, Inc	BY:
TITLE: Manager Steve Menann	TITLE:
DATE: 4/24/2023	DATE:

SEELEY INTERNATIONAL

INSTALLATION MANUAL

TBQ / TBS Evaporative Cooler

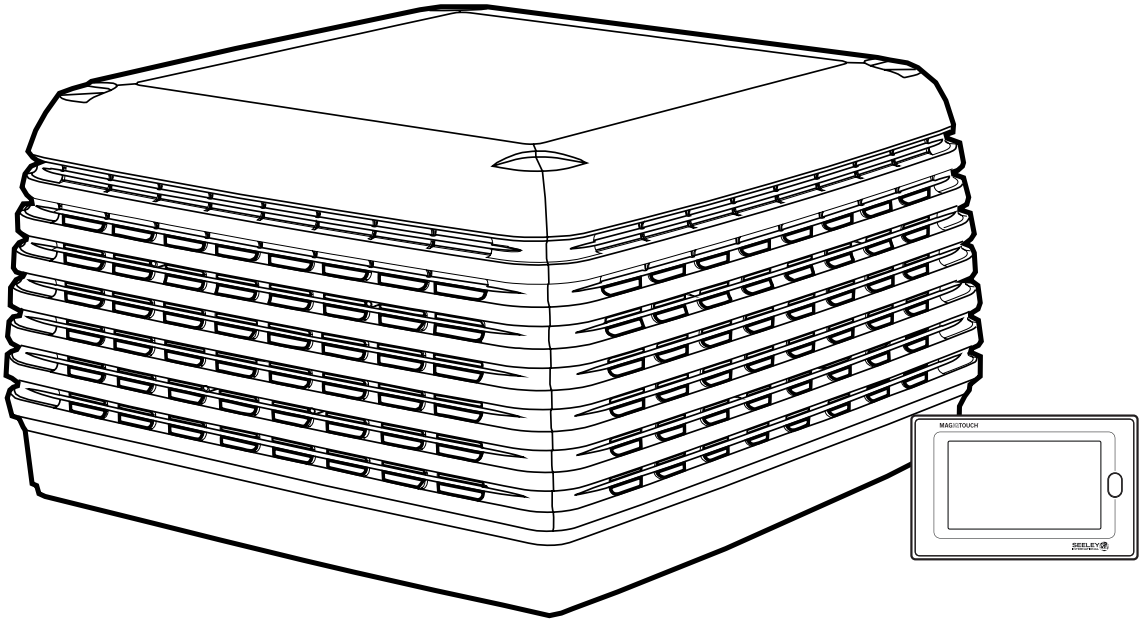

Breezair
NUMBER ONE IN NATURAL COOLING

Original English Instructions

TABLE OF CONTENTS

SAFETY	3
QUICK GUIDE	4
COOLER LOCATION	6
REMOVING THE VENTURI	6
REMOVING THE TRANSITION	6
PREPARING THE DROPPER	7
MOUNTING THE DROPPER	7
SECURING THE DROPPER & TRANSITION	7
WEATHER DAMPER	8
CONVEYING THE COOLER TO THE ROOF	8
MOUNTING THE COOLER	9
CABLE INSTALLATION	9
ELECTRICAL REQUIREMENTS	10
WATER REQUIREMENTS	10
WATER MANAGEMENT	11
INSTALLING THE DRAIN VALVE	11
INSTALLING THE WATER SENSOR	11
INSTALLING THE BLEED FUNNEL ALTERNATIVE	11
INSTALLING THE INLET SOLENOID	12
INSTALLING THE FLOAT VALVE	12
MAINS WATER CONNECTION	12
INSTALLING THE VENTURI / FAN ASSEMBLY	13
ELECTRICAL CONNECTION	13
CONNECTING THE WATER PUMP	14
CONNECTING THE MAGIQTOUCH CONTROLLER®	15
MAGIQTOUCH CONTROLLER® DISPLAY INFORMATION	15
SETTING THE WATER LEVEL	15
SETUP FOR BLEED FUNNEL	15
FAULT CODES INDICATED BY LED's ON THE ELECTRONICS MODULE	16
COMMISSIONING THE COOLER	16
COMMISSIONING COMPLETION CHECKLIST	17
ADJUSTING COOLER SETTINGS	18
TROUBLE SHOOTING	19

WARNING! Failure to install and commission the product in compliance with these instructions, or failure to do the job properly and competently, may void the customer's warranty. Further, it could expose the Installer and/or the Retailer to serious liability.

SAFETY

READ AND SAVE THESE INSTRUCTIONS

EMPLOYER AND EMPLOYEE RESPONSIBILITIES

The installation and maintenance of evaporative coolers at height has the potential to create Occupational Health and Safety issues for those involved. Installers are advised to ensure they are familiar with the relevant State and Federal legislation, such as Acts, Regulations, approved Codes of Practice and Australian Standards, which offer practical guidance on these health and safety issues. Compliance with these regulations will require appropriate work practices, equipment, training and qualifications of workers.

Seeley International provides the following information as a guide to contractors and employees to assist in minimising risk whilst working at height.

WARNING - TO REDUCE THE RISK OF FIRE, ELECTRIC SHOCK OR INJURY TO OTHER PERSONS, OBSERVE THE FOLLOWING:

1. Use this unit only in the manner intended by the manufacturer. If you have questions, contact the manufacturer.

2. Before servicing or cleaning the unit, switch power off at service panel and lock the service disconnecting means to prevent power from being switched on accidentally. When the service disconnecting means cannot be locked, securely fasten a prominent warning device, such as a tag to the service panel.

3. Installation work and electrical wiring must be done by qualified person(s) in accordance with all applicable codes and standards, including fire-rated construction.

4. When cutting or drilling into walls or ceilings, do not damage electrical wiring and other hidden utilities.

5. Ducted fans must always be vented to the outdoors.

6. Do not use this fan with any solid-state speed control device.

7. New hose sets supplied with the appliance are to be used. Old hose sets (from previous installations) shall not be used.

8. If the supply cord is damaged, it must be replaced by the Manufacturer, its Service Agent or similarly qualified persons in order to avoid a hazard.

INSTALLER AND MAINTENANCE CONTRACTORS – RISK ASSESSMENT

A risk assessment of all hazardous tasks is required under legislation. A risk assessment is an essential element that should be conducted before the commencement of work, to identify and eliminate the risk of falls or to minimise these risks by implementing control measures. There is no need for this to be a complicated process, it just is a matter of looking at the job to be done and considering what action(s) are necessary so the person doing the job does not injure themselves.

SAFETY cont.

This should be considered in terms of:

- What are the chances of an incident happening?
- What could the possible consequence be?
- What can you do to reduce, or better still, completely eliminate the risk?

Some points to consider:

- What is the best and safest access to the roof and working areas?
- If a worker is alone, who knows they are there and if they get into difficulty, how can they summon help? (Call someone on the ground? Mobile phone? etc.).
- What condition is the roof in? Should the trusses, underside or surface be checked?
- Does the worker have appropriate foot wear? (Flat sole jogger type is advisable).
- Are all power cables / extension leads safe and appropriately rated?
- Are all ladders, tools and equipment suitable in good condition?
- Where ladders are to be used, is there a firm, stable base for them to stand on? Can they be tied or secured in some way at the top? Is the top of the ladder clear of electricity supply cables?
- Is there a roof anchor to attach a harness and lanyard to? If so, instruction should be issued for the use of an approved harness or only suitably trained people used.
- Are all tools and materials being used, prevented from slipping and falling onto a person at ground level? Is the area below the work area suitably protected to prevent persons walking in this area?
- Does the work schedule take into account weather conditions, allowing for work to be suspended in high winds, thunder storms/lightning or other types of weather giving wet, slippery surfaces?
- Is there an on-going safety check system of harnesses, ropes, ladders and access/lifting equipment and where they exist on roofs, anchor points before the commencement of work?
- Is there a system which prevents employees from working on roofs if they are unwell or under the influence of drugs or alcohol?
- Are there any special conditions to consider i.e. excessive roof pitch, limited ground area, fragile roof, electrical power lines?

Other Important Requirements

- Never force parts to fit because all parts are designed to fit together easily without undue force.
- Never drill holes in the tank of the cooler.
- Check the proposed cooler location, to ensure that it is structurally capable of supporting the weight of the cooler, or provide an adequate alternate load bearing structure.
- Ensure the installation complies with all local and National regulations with regards to electrical, plumbing and bushfire construction requirements.

QUICK GUIDE

Step 1

SAFETY

Read & understand the safety section.

Page 3

Step 2

COOLER LOCATION

Check cooler location. Consider regulations. Discuss with customer.

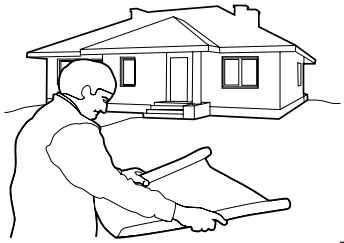

Page 6

Step 3

REMOVE VENTURI

Press the clip on both sides of the venturi to release.

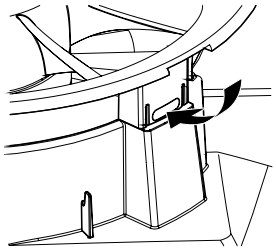

Page 6

Step 7

SECURE TRANSITION TO DROPPER

Use the TEK screws provided. Break the transport clips for the weatherdamper.

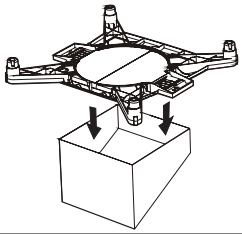

Page 7

Step 8

CHECK WEATHER DAMPER

Check operation of the weatherdamper. Ensure weatherdamper moves freely.

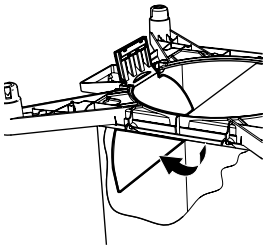

Page 8

Step 9

CONVEY COOLER TO ROOF

Always use 2 persons to position the cooler when handling manually.

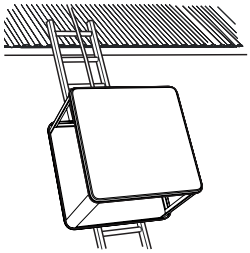

Page 8

Step 13

INSTALL DRAIN VALVE

(Where provided)

Never drain waste water directly onto the roof. Be sure to use supplied ‘O’ Rings and fittings.

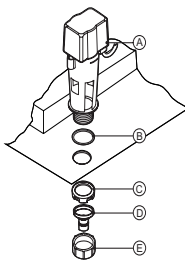

Page 11

Step 14

INSTALL WATER SENSOR

(Where provided)

Ensure the clip is fully engaged.

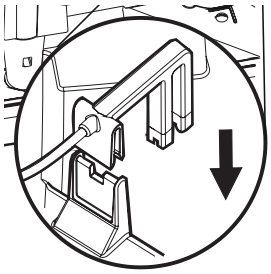

Page 11

Step 15

INSTALL INLET SOLENOID

(Where provided)

Use the supplied hose set and fittings. Note the water flow direction marking on the solenoid.

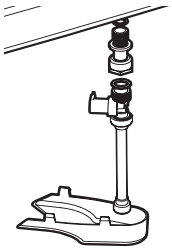

Page 12

Step 19

SET THE WATER LEVEL

Turn on the mains water and adjust the float to allow water to fill to the required level.

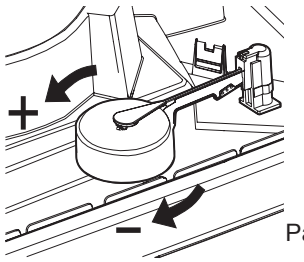

Page 15

Step 20

CHECK COOLER OPERATION

Switch the mains power on and test run the cooler, refer to the MagIQtouch Controller Installation Guide.

Page 16

Step 21

FINAL CHECK

Complete the commissioning checklist at the end of this document.

Page 17

QUICK GUIDE cont

Step 4

REMOVE TRANSITION

Press the clips inwards to release the transition from the tank.

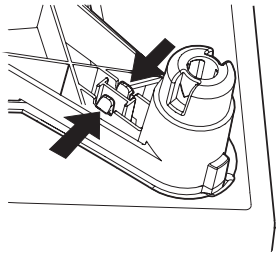

Page 6

Step 5

PREPARE THE DROPPER

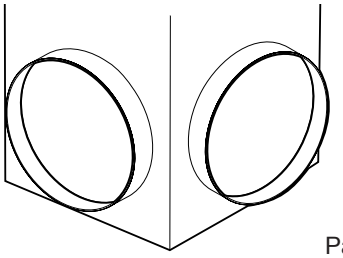

Page 7

Step 6

MOUNT DROPPER

Position, level and secure the dropper. Flash the dropper to prevent water ingress into the roof cavity.

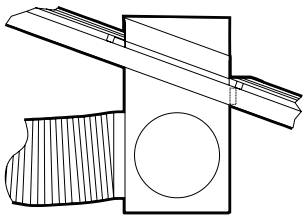

Page 7

Step 10

MOUNT THE COOLER

Lower the cooler onto the transition.

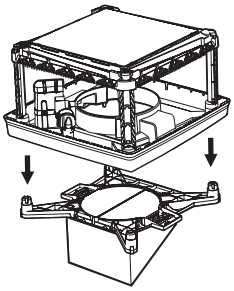

Page 9

Step 11

CABLE INSTALLATION

Run the power and control cable down the conduit and terminate in the junction box.

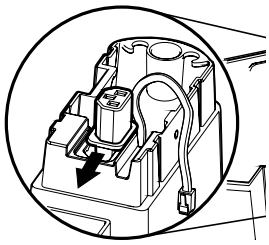

Page 9

Step 12

LOCAL REGULATIONS

Read and adhere to local electrical and plumbing rules and regulations.

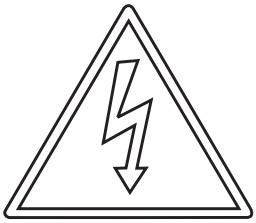

Page 10

Step 16

INSTALL VENTURI/FAN

Ensure the venturi is fully located into the tank and the motor lead is not caught or pinched.

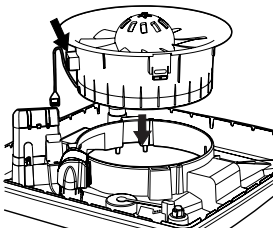

Page 13

Step 17

ELECTRICAL CONNECTIONS

Connect the cooler components to the electronics module. Plug the mains cable into the electronics module.

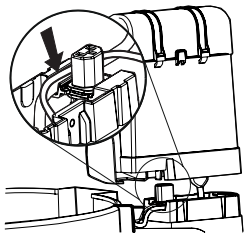

Page 13

Step 18

MOUNT AND CONNECT THE MAGIQTOUCH CONTROLLER

Refer to MagIQtouch Controller Installation Guide.

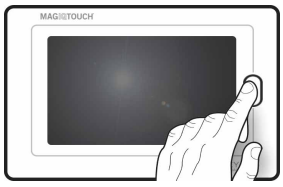

Page 15

Step 22

CLEAN UP

Clean up the site!

Page 17

Step 23

CUSTOMER HANDOVER

Show customer how to operate cooler.
Give them both the controller and cooler owner's manual.
Explain maintenance requirements.

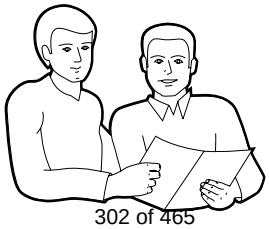

Page 17

COOLER LOCATION

Check proposed cooler location to ensure it is structurally capable of supporting the weight of the cooler. If the roof is structurally inadequate, provide an alternate load bearing structure.

The ideal location for the cooler is in a central position on the roof (away from sleeping areas and where people spend most of their time) so that the duct runs are of approximately the same length. Carefully consider neighbouring residences and noise levels when locating the cooler, if necessary talk to the customer and the neighbour before carrying out the installation.

Always locate the cooler where it will receive adequate fresh air and not in a recess where it may be starved for air or where the air is polluted. Ensure that the cooler is installed such that the fan is facing an unoccupied space.

Ensure location is a minimum of:

- 3m/10’ from a solid fuel heater flue,
- 1.5m/5’ from a gas flue,
- 5m/17’ from a sewer vent, and
- 600mm/2’ from a wall.

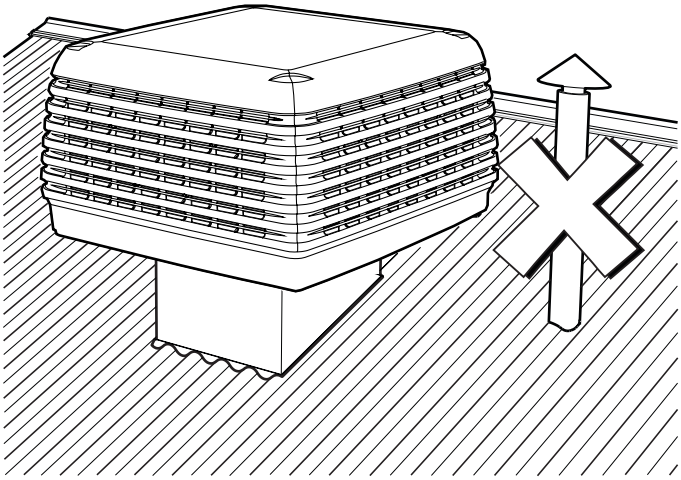

ILL1150-A

The cooler must be mounted at least 3m/10’ (preferably 5m/17’) away from any TV antenna or antenna cables.

Make sure the cooler is not between the antenna and the transmission tower that is providing the television signal to the home.

Allow adequate access to and around the cooler for maintenance. Provision must be made for access to electricity, water supplies and drains.

Note! Do you need to discuss the installation of items like safety anchor points with the customer?

REMOVING THE VENTURI

Once the pad frames have been removed, detach the venturi and fan assembly.

Disengage the two venturi clips as shown.

Note! Ensure the steel restraint cable and motor cable are secured against the side of the venturi by the sticker provided.

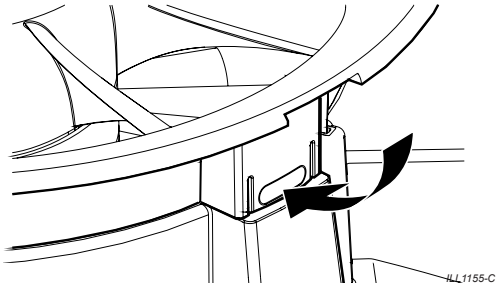

ILL1155-C

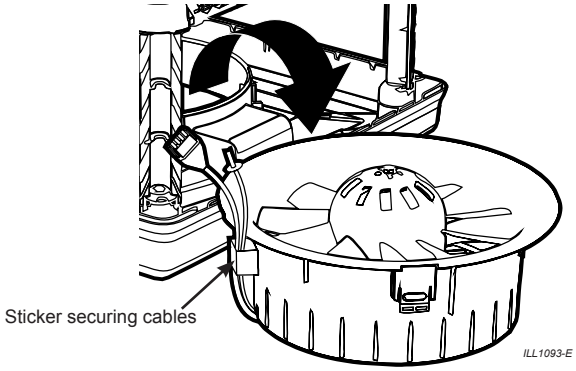

ILL1093-E

Lift the venturi and fan assembly out of the cooler. Take care with the motor lead, which will be sitting loosely in the bottom of the cooler.

The venturi and fan assembly can be placed on to the ground until the rest of the cooler has been installed on the dropper.

REMOVING THE TRANSITION

Turn the cooler onto its side to remove the transition. There are clips in each of the four corners that will disengage once the transition is given a firm pull.

If any of the corners are difficult to remove do not use excessive force. Gently squeeze the clips together and remove the transition one corner at a time.

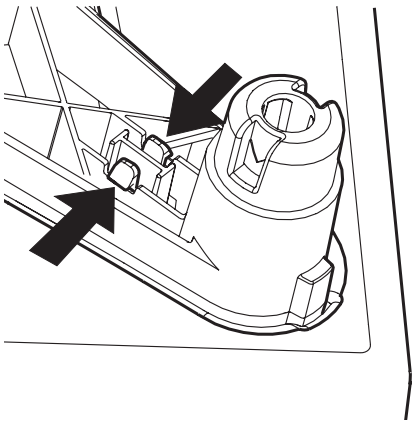

ILL1155-C

PREPARING THE DROPPER

The 550 x 550mm / 21.7 x 21.7” dropper duct must have a raw edge or safe edge at the top. Do not fold in a flange as this may interfere with the transition and/or weatherdamper.

MOUNTING THE DROPPER

Install the dropper and securely fix it to the roof structure on 3 sides. This may require the addition of extra structural timber.

Important! The dropper must never sit directly on any ceiling joists or beams, as this may cause noise or vibration issues, and possible ceiling damage.

Ensure the top of the dropper is level and square in all directions (use a spirit level). This helps with levelling the cooler.

The installer must ensure the dropper is suitable, and is secured adequately for wind conditions at the site. Additional restraints may be required if the cooler is more than 200mm/8” higher than the roof timbers, or design wind velocity at the site exceeds 43m/s / 141fps.

In exposed or very high wind areas use 16 screws, minimum shank diameter 5.2mm / 7/32” to secure the dropper. In areas subject to windstorms/hurricanes or where the cooler is located more than 8m/26’ above the ground seek advice from a structural engineer.

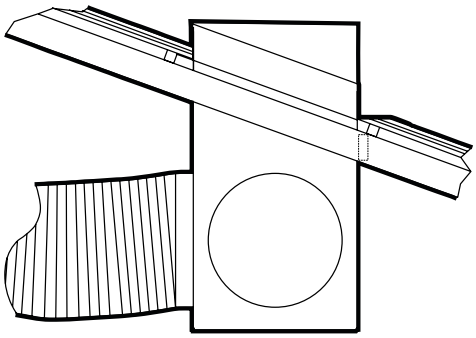

ILL1683-A

The dropper may now be flashed to the roof. Make sure there is no chance of water entering the roof space.

SECURING THE DROPPER & TRANSITION

Fit the transition onto the dropper as shown. Ensure that it is oriented correctly, as shown by the engraved detail on the transition.

Check the level of the transition on the dropper, with a spirit level placed across the flats in both directions.

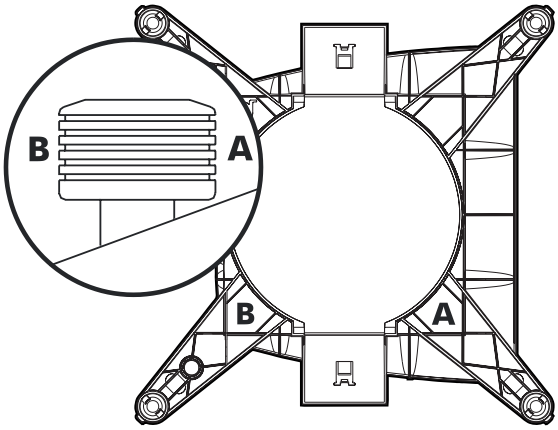

ILL969-B

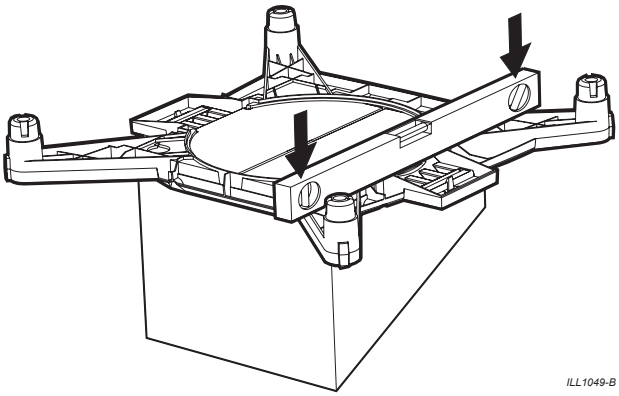

ILL1049-B

Once level, begin securing the transition to the dropper using the screws provided. There are eight ‘V’ notch locations for screws.

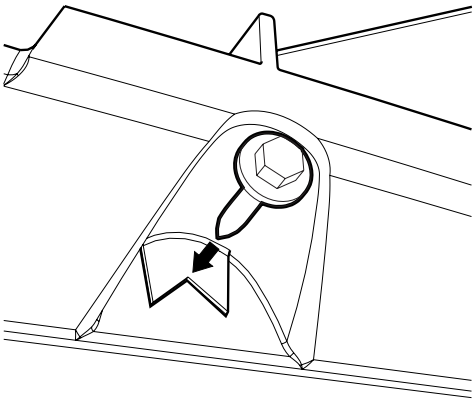

ILL967-B

Only use the screws provided. These must be used in the correct positions to prevent interference with the weatherdamper. All eight (8) screws must be used. Check the level periodically before driving in all the screws.

Ensure the duct insulation is firmly held against the duct connector flange on the dropper.

WEATHER DAMPER

Break off both clips on the transition that retain the weatherdamper.

Ensure that the weatherdamper flaps open all the way and do not interfere with the dropper or any screws. The flaps should move freely through 90º.

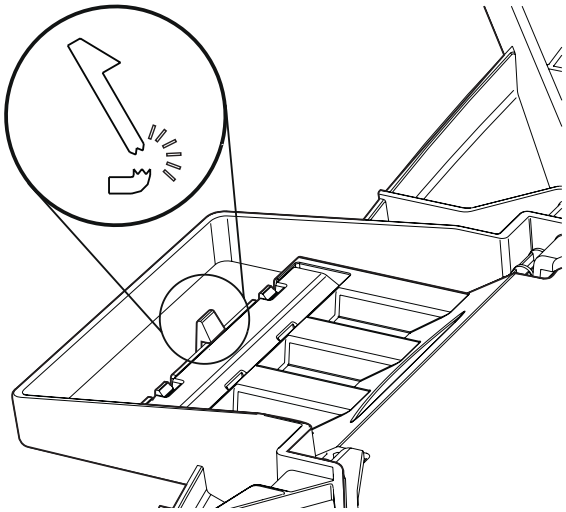

ILL983-B

Important! There must be no obstructions to the weatherdamper opening fully as it will adversely affect the performance of the cooler.

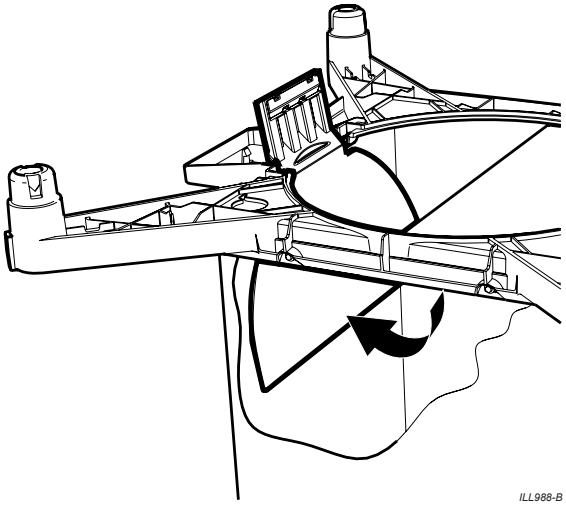

ILL988-B

CONVEYING THE COOLER TO THE ROOF

Caution! Do not take risks when raising the cooler to the roof for installation. Use safety equipment, appropriate procedures and always have assistance.

If you intend to pull the cooler onto the roof using a ladder as a slide, then guide the cooler on the underside of the tank.

It is recommended that at least 2 people move the cooler into position and that the transition, pad frames, venturi assembly and any unsecured objects are removed beforehand.

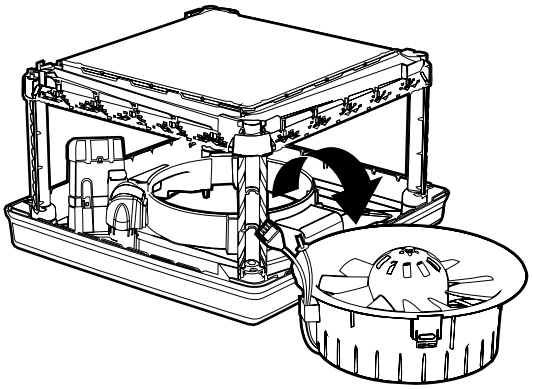

ILL1093-E

Attach ropes or slings through the central tank hole. Do not slide the cooler along the ground, lift and carry it. Do not drop the cooler. Always handle the cooler with care.

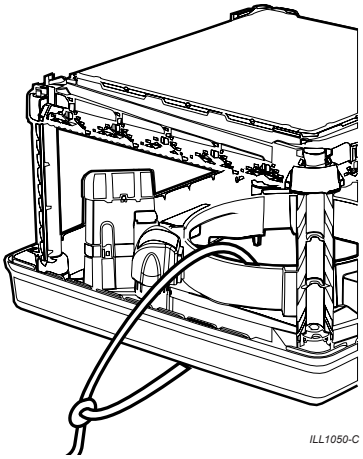

ILL1050-C

If you intend to pull the cooler to the roof using a ladder as a slide, then guide the cooler on the underside of the tank.

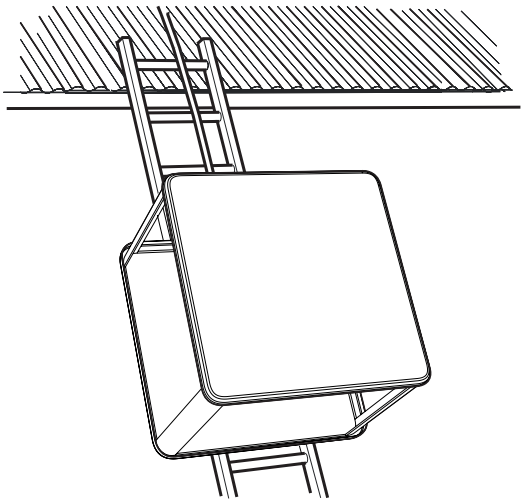

ILL1051-C

MOUNTING THE COOLER

Once the cooler is on the roof, carefully lift the assembly onto the transition and into place. The assembly will only fit onto the transition in one orientation. Refer to the engraved details moulded into the transition.

Ensure that the clips in all four corners engage correctly.

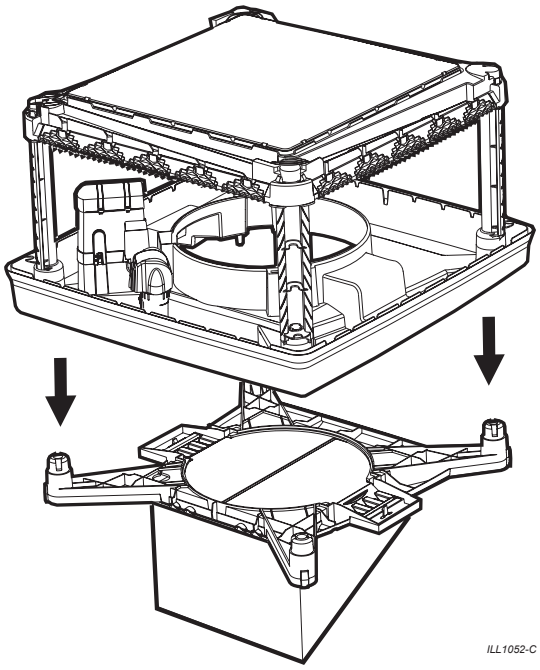

Do not use any screws to fix the cooler to the transition.

Important! Do not place the venturi assembly into the cooler at this stage.

CABLE INSTALLATION

After fitting the cooler to the dropper, disconnect the electronics module from the tank by removing the screw under the switch. The isolation switch cannot be activated with this screw removed.

Note! Place the electronics module and the screw safely to one side for later use.

Do not re-fit the electronics module, as the motor plug will require connection to the underside of the module when the venturi is refitted into the cooler.

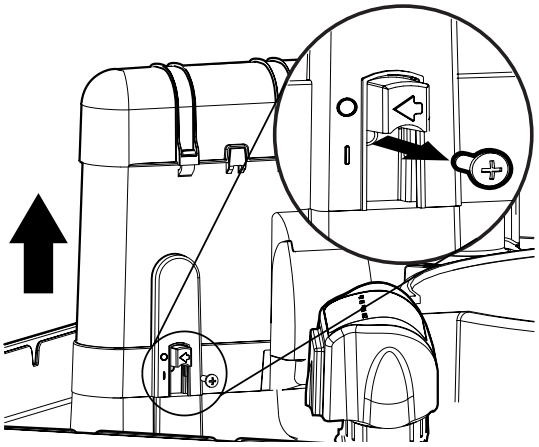

CABLE INSTALLATION cont.

Your installation kit includes the power cable with ends ready to terminate, and control cable.

Pass the taped end of the wall control cable through the conduit adaptor (factory fitted in the transition) and leave about 0.5m (20”) in the water tank.

Take the power cable and drop the non-plug end down the hole where the electronics module was and pass it through the conduit adaptor. **Important!** Pass the wall control cable through the conduit first.

Lock the power cable socket in place by sliding the plug in sideways into the tank as shown.

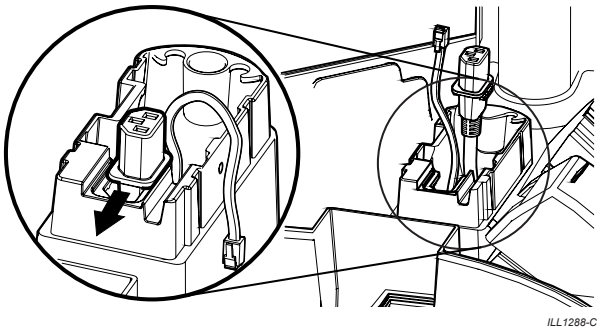

The plug will only insert one way, with the chamfered end first.

Now pass the cables through your main conduit and connect the main conduit to the conduit adaptor (under the transition).

Terminate the power cable in a junction box installed nearby. The fixed wiring must be fitted with an isolation switch that breaks the active (hot) and neutral (common) in accordance with local wiring rules. We recommend the junction box be located and installed on the duct.

Do not penetrate the duct near the weatherseal.

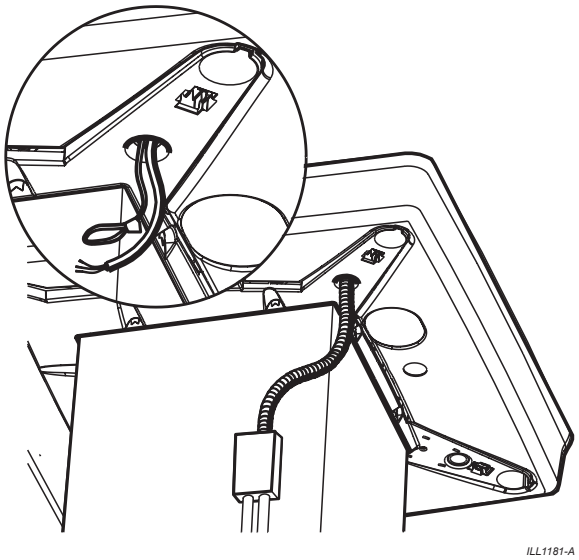

Note! The maximum length for the wall control cable to travel alongside the power cable is 10m (33’).

WARNING! Do not let cables, cable ends, or the control box get wet. Position the cables in the dropper so they will be accessible from inside the roof space.

ELECTRICAL REQUIREMENTS

Installation of the cooler must conform to local electrical rules, regulations and standards.

Important! It is a requirement of Seeley International that all Breezair coolers be connected to a dedicated circuit to the distribution board, with a separate circuit breaker and incorporate a separate isolation switch in accordance with the local wiring rules and the National Electric Code.

The following specifications for the cooler electrical supply are required:

230V / 50Hz, 60Hz Single Phase (see nameplate for exact data for this cooler)

The electronics module is fitted with a 12A re-settable circuit breaker. To reset the circuit breaker turn off the isolation switch, remove the electronics module and push the manual reset toggle switch located underneath the electronics module.

WARNING! If the supply cord is damaged, it must be replaced by the manufacturer, its service agent or similarly qualified persons in order to avoid a hazard.

FIELD WIRING DIAGRAM

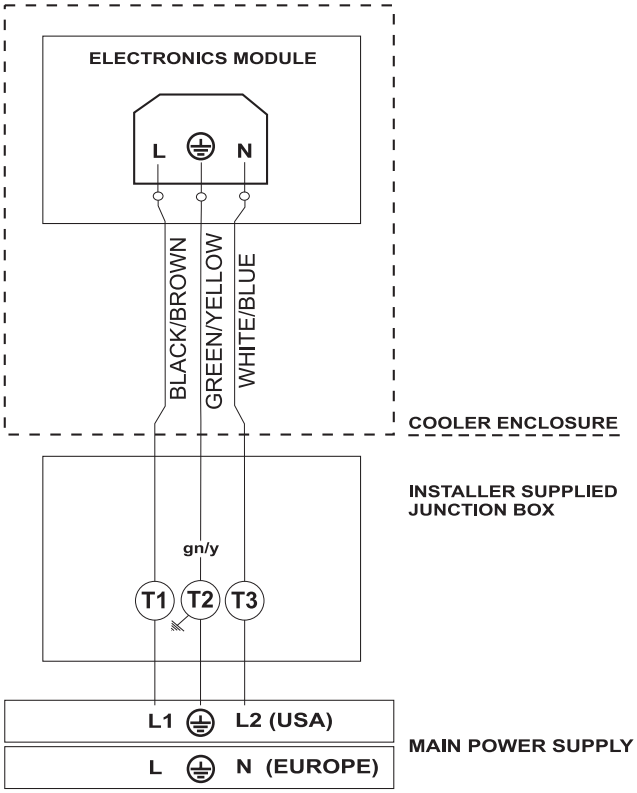

ILL1898-A

WATER REQUIREMENTS

Installation of the cooler water supply must conform to local plumbing rules, regulations and standards.

The following specifications for the cooler water supply are required:

Water Connection	½" BSP
Min Water Pressure	100kPa / 15psi
Max Water Pressure	800kPa / 115psi
Min Water Flow	8 liters/min / 2.1 gallons/min
Max Water Temperature	40°C / 104°F

Important! If the water pressure exceeds maximum specification then a pressure reducing valve is required and must be supplied and fitted by the installer.

A permanent water supply is required to be connected to the float valve. The water connection point is located on the underside of the cooler.

You must install a manual 1/4 turn ball type shut off valve (do not use a stop cock) in the water supply line adjacent to the cooler, subject to local plumbing regulations. This allows the water supply to be isolated whenever work needs to be done on the cooler.

The water connection is a 1/2" BSP compression fitting or a 1/2" BSP to 1/4" compression fitting on the end of a flexible hose. This can fit directly onto the water pipe or be screwed directly onto the manual water shut-off valve as required.

Always ensure that the water pipe connection does not place sideways strain onto the float valve.

Important! In areas subject to freezing, the water supply line to the cooler requires a drain down facility at the lowest point in the water supply pipe.

Important! Flush the water pipe to remove any swarf before final fitting. Swarf can lodge in the solenoid and float valve, preventing them from functioning correctly.

WATER MANAGEMENT

You have the choice of installing a water management system including a drain valve, water sensor and inlet solenoid; or a bleed funnel.

Both systems provide overflow and water drain features, however the water management system is also designed to actively reduce salt and mineral deposits in the air cooler.

INSTALLING THE DRAIN VALVE

Water drained from the cooler must be carried away to a suitable discharge point in accordance with local regulations.

Important! Never drain water from the cooler directly on to the roof.

Assemble the drain valve (A) as shown:

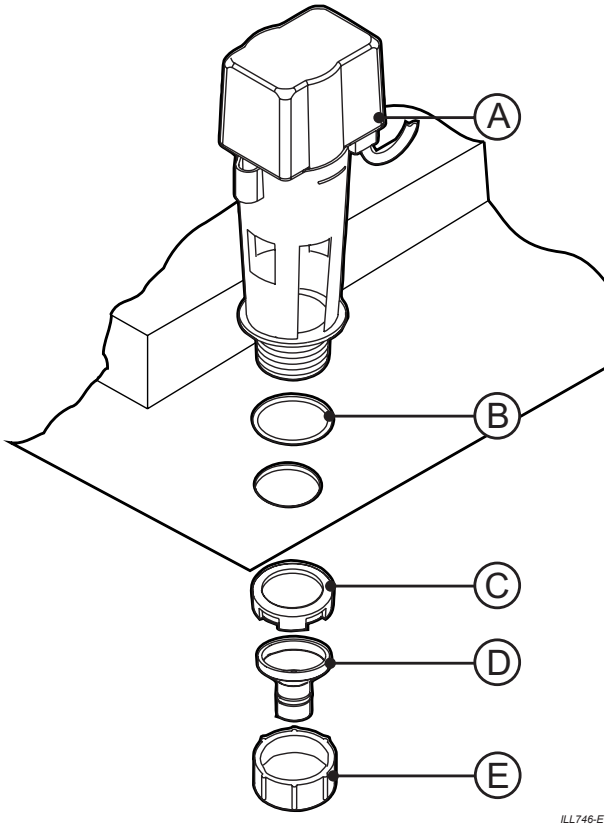

ILL746-E

Make sure the “O”-ring (B) is fitted before placing the drain valve into the hole. Screw the nut (C) up tightly by hand underneath to locate the drain valve. Locate the funnel (D) up against the bottom of the drain valve thread and secure with the second, larger nut (E).

Make sure that you use the correct drain adaptor.

Make sure the drain water discharge flows freely away from the cooler.

Important! Do not over-tighten plastic fittings.

INSTALLING THE WATER SENSOR

Assemble the water sensor as shown by clipping the sensor to the tank. Ensure that the clip fully engages.

Route the sensor cable through the cable supports in the tank as shown and leave the end clear of any water. The cable will be plugged in later.

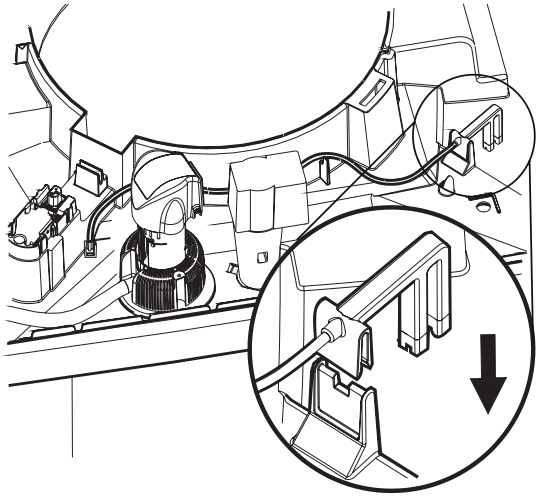

ILL1056-C

INSTALLING THE BLEED FUNNEL ALTERNATIVE

The bleed funnel is a simplified alternative to the drain valve. It also provides overflow and drain features.

Assemble the bleed funnel to the water tank as shown. Make sure the o-rings are fitted correctly. Screw the nut tight by hand!

Attach the drain adaptor under the bleed funnel and attach a pipe to carry the water to a suitable drain point.

Do not allow the water to run freely onto the roof - it will stain the roof!

The required rate of bleed will vary according to the water quality. Set it to the minimum rate, as shown in the following table.

TBQ250, TBS280, TBQ350, TBS380	1 plug in
TBQ450, TBS480, TBQ500, TBS500 TBQ550, TBS580	2 plugs in

If salt starts to build up on the cooling pads insert another plug. Adjust the bleed rate until the salt build up is minimised.

The water management devices fitted will help control the effects of poor quality water, but they cannot eliminate the problem.

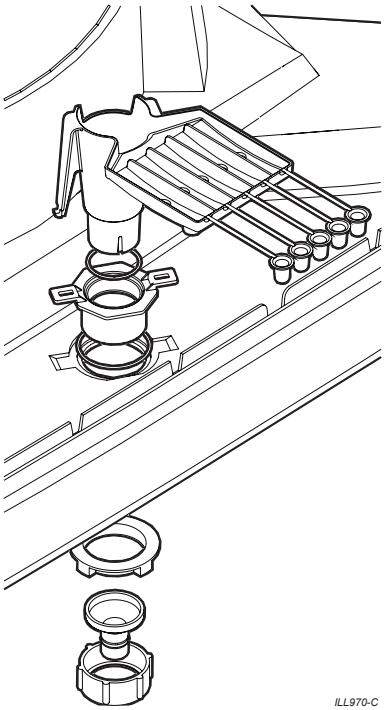

ILL970-C

INSTALLING THE INLET SOLENOID

Screw the solenoid valve into the extension tube.

The water solenoid is required to be installed in the direction of flow as per the arrow indicator on the solenoid.

Note! Tighten the solenoid valve until it seals against the rubber washer and is in the orientation shown such that the solenoid cover will clip on over the top.

For coolers fitted with a drain and solenoid valve, it is a requirement to fit the new detachable hose set supplied. Any old hose sets should not be re-used.

Attach the flexible hose to the inlet of the solenoid valve.

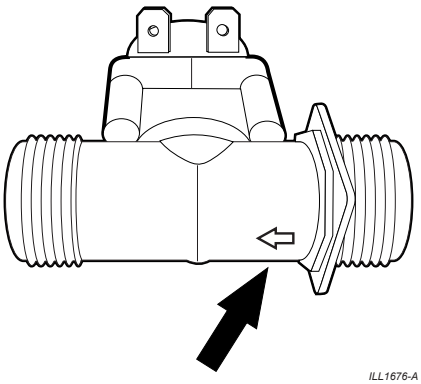

ILL1676-A

Connect the supplied cable to the solenoid valve, then push the other end through the hole in the transition as shown. Pull the cable through from inside the cooler and route the cable as shown. This will be connected later.

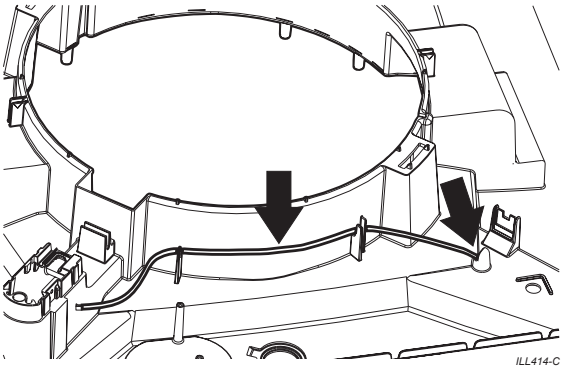

ILL414-C

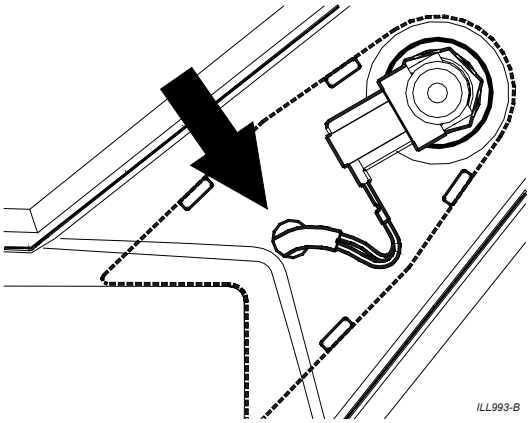

ILL993-B

Clip the solenoid cover in place.

INSTALLING THE FLOAT VALVE

Assemble the float valve to the cooler as shown.

Ensure all washers and o-rings are in place. No thread tape is required. Do not over-tighten the plastic fittings.

Make sure the float is centrally positioned and up and down movement is unrestricted.

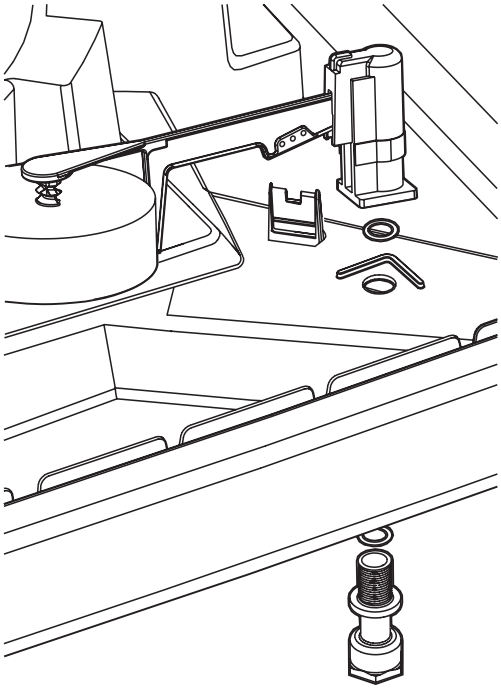

ILL985-E

MAINS WATER CONNECTION

CONNECTION DETAILS

For bleed funnel option, a 3/4” to 1/2” BSP adaptor is to be fitted with the washer to the extension tube as shown!

Connect the main water supply to the water inlet point under the air cooler using the 1/2” BSP Nut and olive fitting or 1/2” BSP - 1/4” brass compression adaptor fitting as required.

Always install a shut-off valve (do not use a non-return type valve) close by the air cooler.

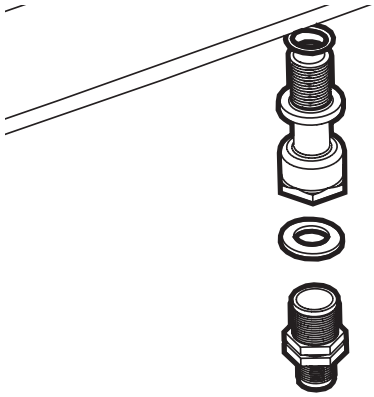

ILL972-C

INSTALLING THE VENTURI / FAN ASSEMBLY

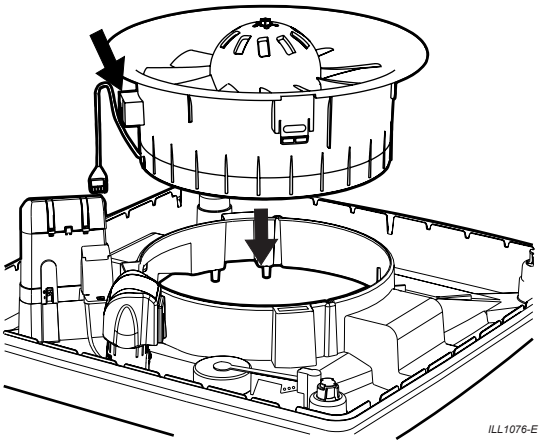

Ensure the bottom of the lead is aligned with the bracket inside the tank. Failure to do this may result in the cable being caught between the outside of the bracket and the venturi (B).

NOTE! Ensure the steel restraint cable and motor cable are secured against the side of the venturi by the sticker.

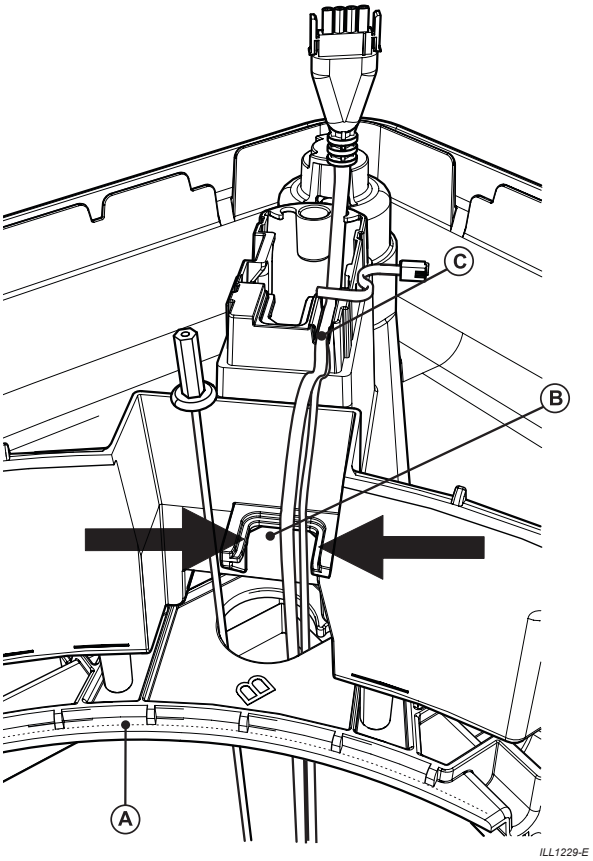

Important! Make sure the venturi is correctly and symmetrically located all the way around its cavity. Check this by making sure the venturi sits inside the locating ridge all the way around (A). Ensure the plug/lead assembly is not caught under the bottom lip of the venturi, by pulling the lead through fully.

Route the end of the wall control cable out of the cavity through channel “C” in the electronics module mounting bracket. Then feed the motor lead through channel “C” so that it sits on top of the wall control cable.

ELECTRICAL CONNECTION

Connect the motor cable to the base of the electronics module. It is a polarised plug and will only insert one way. Ensure it is secured fully so that its retention clips are engaged.

With both cables in place (inside the channel), re-assemble the electronics module and screw it to the tank.

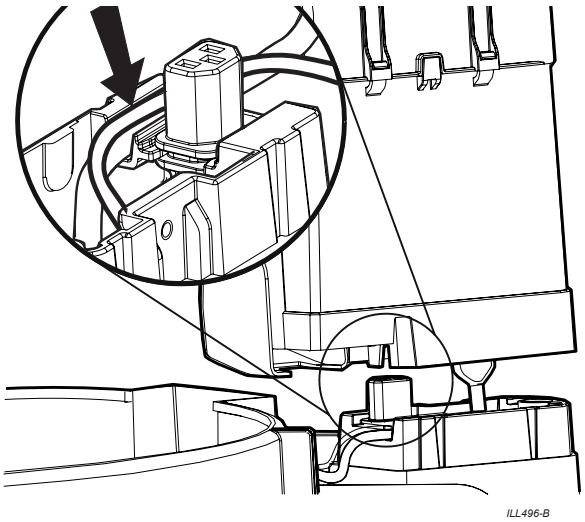

Important! Ensure the motor lead sits on top of the wall control cable inside the channel to avoid interference with the electronics module and power cable connection.

Important! The isolation switch cannot be activated unless this screw is fixed in place.

Switch OFF the electronics module before connecting any accessories.

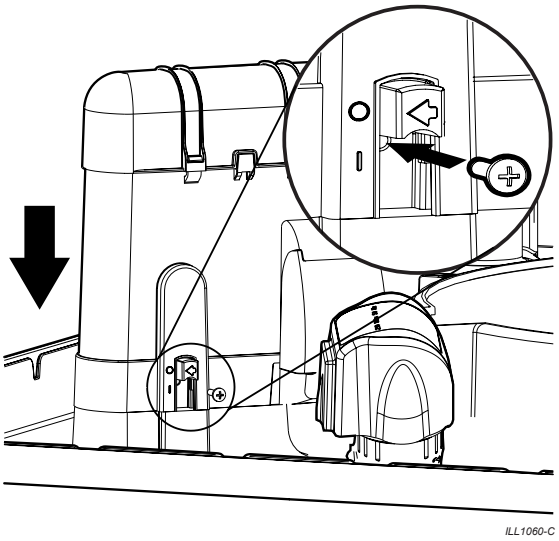

ELECTRICAL CONNECTION cont

Connect the water sensor plug (D) and inlet solenoid plug (C) as shown. If not using a water sensor, then ensure that a shorting plug is fitted as provided.

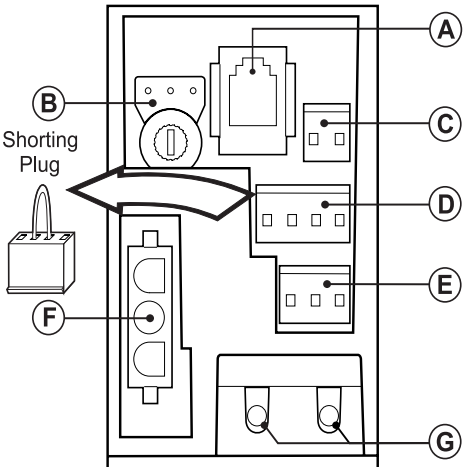

LEGEND

A - Control Cable

B - Speed Adjustment

C - Inlet Solenoid

D - Water Sensor or Shorting Plug

E - Drain Valve

F - Pump

G - Operation & Fault code LED's

ILL1062-G

Route the drain valve cable as shown before connecting it to the electronics module (E).

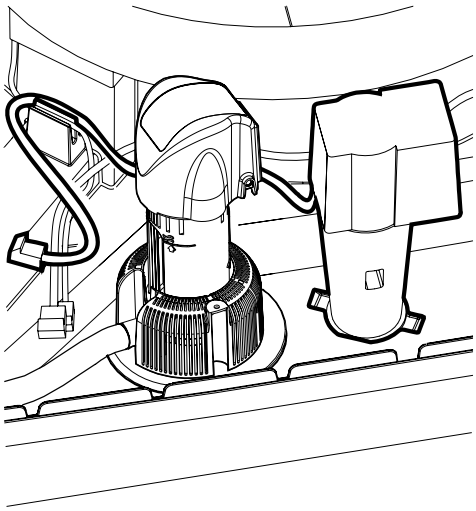

ILL1075-C

Ensure the cables cannot rest in the water once the tank is filled and plugs are connected in the correct orientation.

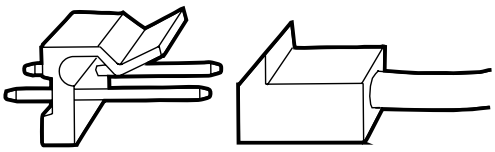

ILL1678-A

CONNECTING THE WATER PUMP

Route the pump cord as shown.

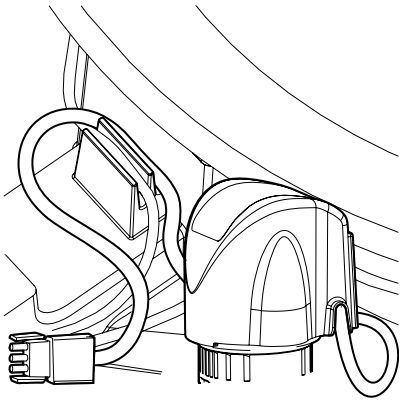

ILL1061-C

Once the water level is set correctly, isolate the electronics module and connect the pump plug (F).

Important! Do not connect the pump plug until the water level is set.

WARNING! Do not run the pump while the pad frames are off and the fan is on.

Once plugs are connected, switch the electronics module on.

Important! Ensure the flexible splash protection cover is in place.

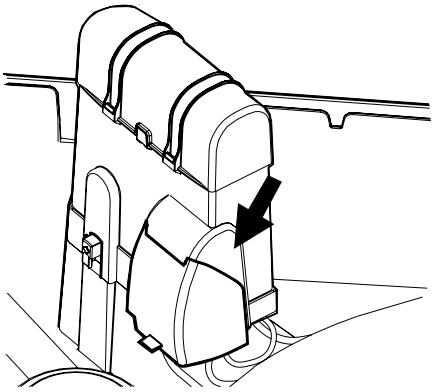

ILL1095-B

CONNECTING THE MAGIQTOUCH CONTROLLER®

Refer to the installation manual provided with the MagIQtouch Controller for instructions on installing the controller.

The wall control cable plugs into the electronics module - (A). (Refer diagram on previous page)

Coolers are supplied with a 20m / 66' control cable. Longer cable lengths are available from Seeley.

Note! Where maximum recommended cable lengths are exceeded, or cables are not routed in accordance with Seeley recommendations, Seeley technical support may not be available and the product warranty may be voided.

MAGIQTOUCH CONTROLLER® DISPLAY INFORMATION

Diagnosis and cooler operating information can also be viewed from the MagIQtouch Controller. Faults are displayed on the screen as they occur.

ILL1714-A

Cooler operating information is available from the 'Service Operating Screen' under the COOLER tab of the SETTINGS menu.

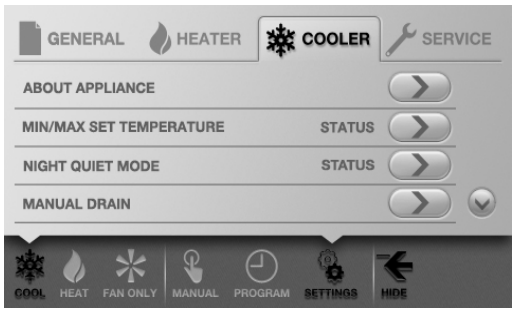

ILL1664-A

SETTING THE WATER LEVEL

Isolate power to the cooler electronics and disconnect the pump, making sure the plug is kept away from any water. Turn the power back on.

ILL1663-A

SETTING THE WATER LEVEL cont

Turn on the mains water supply to the cooler.

Turn the cooler on at the Controller, in "COOL" mode.

Adjust set temperature slider to be close to current room temperature so that fan speed remains low.

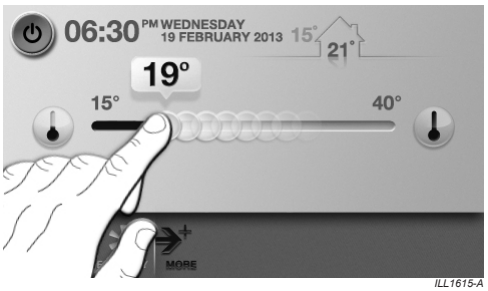

ILL1615-A

Allow the tank (reservoir) to fill with water. The float valve will eventually stop the water from entering the cooler. Wait for this to happen and check the water level.

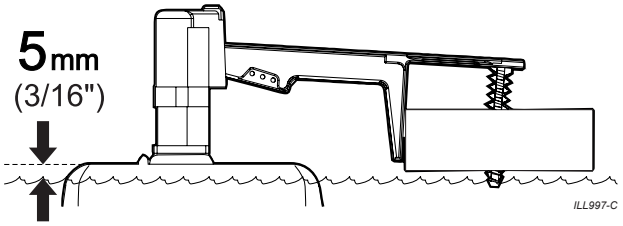

ILL997-C

If the level is too high rotate the float clockwise. Drain some water from the tank and allow it to refill to the new set point. If too low rotate the float in an anti-clockwise direction. The correct water level is approximately 5mm / 3/16" below the surface of the tank the float valve is mounted on. It is advisable to check the water level again after the float valve washer has "bedded in".

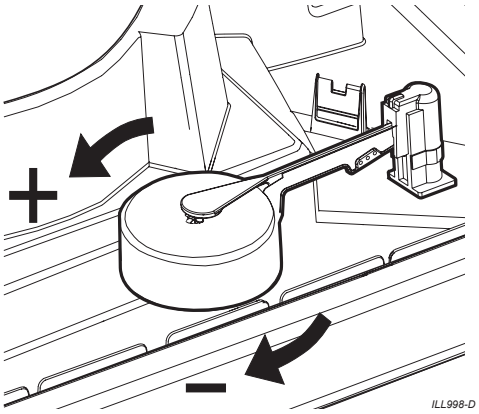

ILL998-D

Once the water level is correct, isolate the control box and connect the pump plug.

SETUP FOR BLEED FUNNEL

If you installed the bleed funnel instead of the drain valve then the cooler will automatically be set to "NO DRAIN CONTROL" provided that the shorting plug is installed correctly.

The "NO DRAIN CONTROL" setting can also be set manually under the "COOLER" tab in the "WATER MANAGER" menu.

FAULT CODES INDICATED BY LED's ON THE ELECTRONICS MODULE

Fault Code 01 (1 Red Flash) = Communication Failure.

- Ensure the wall control cable is fitted correctly.
- Check that wall control cable is in good condition.

Fault Code 02 (2 Red Flashes) = Failure to detect water at probes within 8 minutes.

- Ensure water pressure is sufficient to fill and maintain the tank to specified level within 8 minutes.
- In areas of hard or polluted water, blockage of the strainer/ filter in the water inlet solenoid valve may restrict water flow.
- Water level set too low. For Breezair coolers the water level should be set to 5mm / 3/16" below the float valve base.
- Ensure probe plug is properly connected.
- Plug connections at electronic module upside down or misaligned.
- Water too pure for the probes to sense water is present.
- Pressure build up in pipes can lock up the solenoid valve when a non-return isolation valve is used in the water supply line. It is recommended to use a ball valve, i.e. NOT a non-return type of shut off valve.
- Check drain valve is closing and not cycling due to debris being caught under drain valve washer.

Fault Code 04 (4 Red Flashes) = Failure to clear probes during drain within 4 minutes (where drain valve fitted).

- Check the drain valve opens and water drains from the tank, with nothing obstructing the outflow of water. (e.g. drain hose kinked)
- Excessive drain hose lengths or bends cause air locking and won't allow water to drain.
- Build up of foreign material in drain hose not allowing water to drain away correctly.
- Screws used to fix drain hoses to drain adaptors restricting water from draining from tank.
- Drain valve has failed to open when drain was initiated.
- Inlet water solenoid not shutting off water when the drain is open.
- Water will only flow one way through the inlet water solenoid valve. Therefore, it must be installed correctly. Directional arrow must be pointing towards the float valve assembly. If not, water will not shut off. (Directional arrow can be found on the bottom of the solenoid valve body).
- Debris interfering with water sensor probes.
- Probes not clipped onto mounting brackets correctly.
- Check cooler is level and water drains quickly.

Fault Code 07 (7 Red Flashes) = Incorrect supply frequency (Hz).

This fault will only be seen when the mains power supply frequency deviates from normal frequency by more than 8%. Mains power supply frequency should be 50 or 60Hz. See nameplate for exact data for this air cooler. Petrol/gasoline generators are the most likely cause of this type of fault. This typically will not occur on mains power supplies.

COMMISSIONING THE COOLER

TEST OPERATION

Check that the green light on the electronics module is on and double flashing every 2 seconds. This indicates that power is connected to the electronics module.

Important! Ensure the flexible splash protection cover is put back in place.

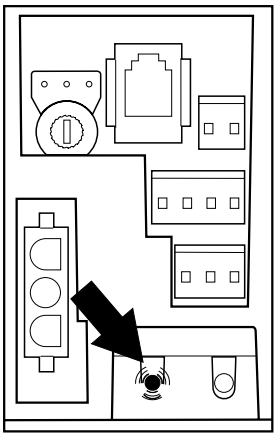

ILL1014-I

REFITTING THE PAD FRAMES

Refit the pad frames by locating the bottom edge in the tank groove, then push the top into the lid.

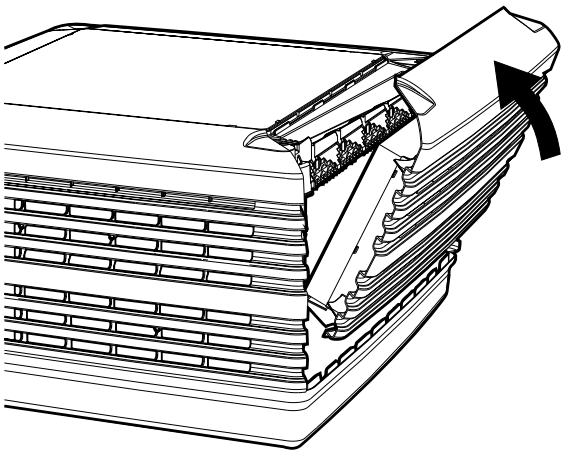

ILL976-D

TESTING THE PUMP

Test the pump by turning the cooler on at the MagIQtouch Controller, in "COOL" mode. Check that water is evenly distributed to all pads.

Note! If the cooler has not been on before it will run a "Pre-Wet" routine where the pump will operate to saturate the pads. This cycle takes 2 minutes, then the fan will start automatically.

TESTING THE DRAIN VALVE (WHERE FITTED)

Select the "SETTINGS" mode on the MagIQtouch Controller and select the "COOLER" sub-heading.

Select the "MANUAL DRAIN" option to operate and test the drain valve.

COMMISSIONING COMPLETION CHECKLIST

COOLER

- □ SECURE - The cooler is secure and level on the dropper using all fixings supplied.
- □ SEALED - The dropper and all penetrations are correctly flashed and sealed.

WEATHERDAMPER

- □ OPERATES - The weatherdamper operates correctly and can open and close without interference.

PLUMBING

- □ FLUSHED - The water pipes were flushed of any foreign materials before connection to cooler was made.
- □ NO EXTERNAL LEAKS - The water is connected with no leaks at fittings.
- □ NO INTERNAL LEAKS - Check all internal water hoses are securely fitted to water distribution spreaders and other internal fittings.
- □ SECURE - Water pipes are correctly saddled as per plumbing regulations.
- □ OWNER INSTRUCTIONS - The owner has been instructed on how to isolate the water to the system in case of emergency.

DRAIN VALVE / BLEED FUNNEL

- □ INSTALLED - The drain valve or bleed funnel is installed correctly, as detailed in this installation manual.
- □ DISCHARGE - The drain water does not discharge onto the roof surface.
- □ WATER LEVEL - Water level has been set correctly, as detailed in this installation manual.
- □ DRAIN VALVE TESTED (where fitted) - Drain the tank by pressing the Drain button. Check the drain fittings and pipes, making sure there are no leaks.

POWER

- □ REGULATIONS - The power supply adheres to all local and national regulations and is wired back to the distribution board on its own separate circuit.
- □ CHECK CABLES - Cables have been correctly connected to the control boxes:
  - □ Power supply
  - □ Motor cable
  - □ Control cable
  - □ Drain valve
  - □ Solenoid cable
  - □ Pump cable
  - □ Probe cable (where fitted)
- □ OWNER INSTRUCTIONS - The owner has been instructed how they can electrically isolate the unit at the meter box in case of an emergency.

COMMISSIONING COMPLETION CHECKLIST cont

DUCTWORK

- □ NO LEAKS - All ducts are hung correctly and there are no air leaks.
- □ CONTROLLER SEALED - All wall holes behind the MagIQtouch Controller have been sealed.
- □ QUIET - Check that the cooler runs quietly and with an even distribution of air to all outlets.
- □ AIRBALANCE – The air balance for all outlets has been adjusted to the customer's satisfaction.

FINAL TEST

- □ Once you are satisfied that the cooler is installed and commissioned correctly, run the cooler and ensure that everything is working as it should.

CUSTOMER HANDOVER

- □ Principles of Ducted Evaporative Cooling explained.
- □ How far the windows need to be opened.
- □ How to turn the cooler on.
- □ How to operate the MagIQtouch Controller.
- □ How to drain the cooler.
- □ How to turn the power and water off.
- □ Maintenance requirements.
- □ The customer has been given the Owner's Manuals & Warranty Card.

CLEAN-UP

- □ All the installation rubbish has been removed and, if applicable, any property damage repaired. Your aim should be to have the customer not even be aware that you have been on site.

FINAL CHECK

- □ With all side panels in place and the unit running for a short period in cooling mode, ensure all pads have even water saturation and there are no visible water leaks

ADJUSTING COOLER SETTINGS

Within the SETTINGS menu of the MagIQtouch Controller is the COOLER sub-heading. Here various settings of the cooler can be adjusted.

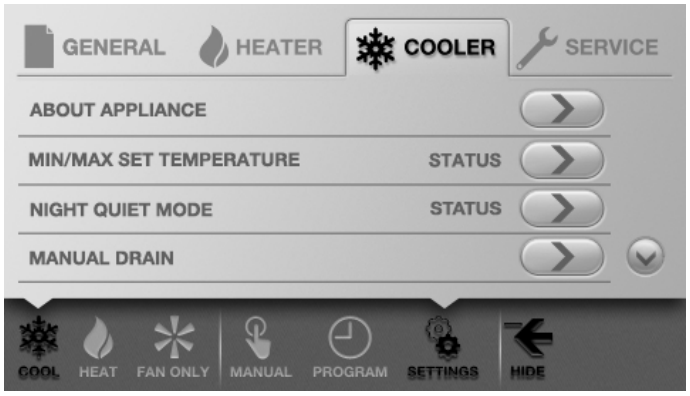

ILL1664-A

ABOUT APPLIANCE

Displays information such as model number, serial number and software version for all coolers connected to the controller.

NIGHT QUIET MODE

Restricts fan speed to a specified level during a specified night period.

MANUAL DRAIN

Turns cooler off and drains the tank.

PAD FLUSH

Turns cooler off and runs pump for a specified amount of time.

AUTO RESTART

By turning this option to ‘ON’, the cooler will automatically restart after a power failure.

DRAIN AND DRY

Cooler will drain and fan will run for 1 hour every day at a specified time.

WATER MANAGER

Select the preferred water management method:

- Salinity Measurement - replaces water when Salinity level reaches set point.
- Timed Drain - drains Tank After 8 tank fill cycles or every 1-2 hours (system dependant).
- No Drain Control - salinity control external to electronics eg. continuous bleed.
- No Water Thermostatic - allows Thermostatic control in VENT mode. No water present. Cooling performance is limited.

WEATHER SEAL OPEN SPEED

The cooler fan will turn on at the specified weather seal opening speed for the first 10 seconds each time it starts up. It will then return to the set fan speed.

ADJUSTING COOLER SETTINGS cont

PRE-WET

When COOL mode is activated, the pump will run for 90 seconds before the fan is switched on.

SALINITY LEVEL

Sets the salinity level at which the tank will drain in “SALINITY MEASUREMENT” mode.

TANK DRAIN DELAY

Sets the time delay before the drain valve opens after the pump in the cooler is turned off.

AUTOSTART

Automatically restarts the cooler in the last operating mode after a power outage.

TROUBLE SHOOTING

Symptom	Cause	Action
Inadequate cooling	Under-sized cooler.	Replace with larger cooler.
	Under-sized ducts.	Carry out cooling load design to determine correct size unit, ducting and outlets required.
	Clogged or dirty cooling pads.	Clean or replace pads.
	Dry pads or lack of water while cooler is operating.	Check water distribution system for possible obstruction in hoses. Check pump.
	Insufficient air discharge openings or inadequate exhaust from building, causing high humidity and discomfort.	Make sure there is adequate provision for exhausting stale air from building (open windows and doors).
	Excessive ambient humidity (see also item above re inadequate exhaust).	On days during summer when ambient humidity is high the cooler will not reduce the temperature as much as on drier days. There is no remedy except to shut off the pump.
Noisy cooler	Fan out of balance due to dirt, etc.	Clean the fan.
	Too much back pressure. Tight duct bends. Grilles too small.	Re-evaluate design; improve duct layout; change grille sizes.
Pump fails to operate.	Circuit breaker tripped.	Check pump for faults. Replace if necessary.
	Pump motor failure.	Replace pump.
Fan fails to start.	Main power circuit breaker tripped.	Check cause of overload. Reset circuit breaker.
	Fan motor burned out.	Replace motor.
	Low system voltage.	Consult with power supply authority.
	Check fault condition via the tri-colour LED on cooler electronics module.	Rectify fault as indicated and restart the cooler.
	MagIQtouch Controller failure.	Replace MagIQtouch Controller.
Pump runs but no water circulation or Pump runs but pads lack water	Insufficient water in tank.	Adjust float level.
	Water hoses blocked.	Check and clean out blockage.
	Pump strainer blocked.	Clean pump strainer.
	Insufficient water supply pressure	Check and confirm water supply pressure
	Water solenoid is installed incorrectly	Check installed in the correct water flow direction
Continuous overflow of water.	Float valve adjustment not correct.	Adjust float valve.
	Heavy pad deposits.	Clean or replace pads.
	Drain Valve failure.	Replace Drain Valve.
	Water solenoid is installed incorrectly	Check installed in the correct water flow direction
Water entering cooler outlet.	Loose water hose connections.	Tighten connections.
	Water hose broken.	Replace cracked or broken hoses.
	Cover not fitted on float valve.	Replace float valve.
	Pads not fitted correctly into pad frames.	Install pad frame correctly.
	Incorrect or damaged pads.	Replace with new Chillcel pads.
Unpleasant odour.	New cooler pads.	Drain tank, refill, run pump for a few hours. Odour will dissipate after a number of hours of operation.
	Cooler located near source of unpleasant odour.	Remove source of odour or relocate cooler.
	Algae in tank water.	Drain pan, clean thoroughly with strong cleansing agent, refill, change pads.
	Pads remain wet after shut down.	Run fan on "vent" for 10 minutes after cooling cycle to dry pads out.
	Heavy pad deposits.	Clean or replace pads.

Service - All regions: Please contact your local Breezair distributor.

seeleyinternational.com

MANUFACTURED BY: SEELEY INTERNATIONAL PTY LTD
112 O'SULLIVAN BEACH RD, LONSDALE SA, 5160. AUSTRALIA

IMPORTED BY: SEELEY INTERNATIONAL (EUROPE) LTD
5 PAPPLEWICK LANE, HUCKNALL, NOTTINGHAM, NOTTINGHAMSHIRE, NG15 7TN, UNITED KINGDOM

SEELEY INTERNATIONAL (AMERICAS) LTD
1202 NORTH 54TH AVENUE, BUILDING 2, SUITE 117, PHOENIX, ARIZONA 85043, USA

It is the policy of Seeley International to introduce continuous product improvement.
Accordingly, specifications are subject to change without notice.
Please consult with your dealer to confirm the specifications of the model selected.

Breezair
NUMBER ONE IN NATURAL COOLING

SEELEY INTERNATIONAL

OWNER'S MANUAL

TBQ / TBS Evaporative Cooler

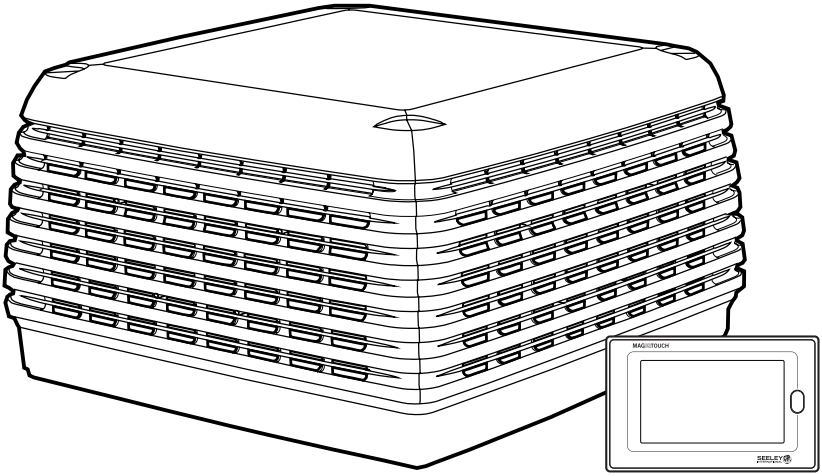

(English)

Breezair
NUMBER ONE IN NATURAL COOLING

Original English Instructions

IMPORTANT SAFETY INSTRUCTIONS

READ AND SAVE THESE INSTRUCTIONS FOR FUTURE REFERENCE.

WARNING - TO REDUCE THE RISK OF FIRE, ELECTRIC SHOCK, OR INJURY TO PERSONS, OBSERVE THE FOLLOWING:

a) Use this unit only in a manner intended by the manufacturer. If you have questions, contact the manufacturer.

b) Before servicing or cleaning unit, switch power off at service panel and lock the service disconnecting means to prevent power from being switched on accidentally. When the service disconnecting means cannot be locked, securely fasten a prominent warning device, such as a tag, to the service panel.

This Breezair cooler is fitted with a MagIQtouch Controller. Please refer to the separate manual provided with the Controller for instructions on how to set-up and operate this system.

This appliance can be used by children aged from 8 years and above and persons with reduced physical, sensory or mental capabilities or lack of experience and knowledge if they have been given supervision or instruction concerning use of the appliance in a safe way and understand the hazards involved. Children shall not play with the appliance. Cleaning and user maintenance shall not be made by children without supervision.

Important Notes!

In areas where temperatures can cause water supply pipes to freeze, a drain down facility should be provided during the installation. This drain down facility must be activated prior to freezing conditions, to avoid possible damage to the cooler components.

If the supply cord is damaged, it must be replaced by a Seeley service agent or similarly qualified person in order to avoid a hazard.

New hose sets supplied with the appliance are to be used.

Old hose sets (from previous installations) should not be re-used.

TABLE of contents

OPERATING YOUR COOLER **3**

MAGIQTOUCH CONTROLLER SETTINGS MENU 3

ABOUT APPLIANCE 3

MIN/MAX SET TEMPERATURE 3

NIGHT QUIET MODE 3

MANUAL DRAIN 3

PAD FLUSH 3

DRAIN AND DRY 3

AUTOCLEAN 3

WATER MANAGEMENT **4**

WATERMANAGER™ **4**

DRAIN VALVE **4**

CONTINUOUS BLEED SYSTEM **4**

POWER OUTAGES **4**

HEALTH REGULATIONS **4**

MAINTENANCE **5**

PRE-SEASON 5

END OF SEASON 5

COOLERS WITH DRAIN VALVES 6

COOLER ISOLATION SWITCH 6

WATER DISTRIBUTION CHANNELS 6

REMOVING THE BLEED SYSTEM 6

HIGH DUTY CYCLE OPERATION MAINTENANCE 7

MAINTENANCE SCHEDULE SERVICE CHECKLIST **8**

TROUBLESHOOTING **9**

Hello and congratulations on purchasing a Breezair evaporative cooler for your home.

At Seeley International we manufacture Breezair evaporative coolers from the highest quality materials, and we have designed the product to provide many years of economical, trouble-free cooling.

OPERATING YOUR COOLER

To provide efficient cooling or ventilation the building must have sufficient exhaust openings to the outside of the building.
To assist air flow, open windows and doors that are farthest from the outlet vent in each room. In these rooms, provide an exhaust opening about 2 times the vent size of the room.

Where the design of the building prevents adequate exhaust, consideration should be given to the provision of mechanical extractions, such as an exhaust fan.

There are three main ways that an evaporative cooler can operate to provide cooling comfort.

The cooler can be set at a constant fan speed, without reference to the current temperature.

- The cooler can be given a temperature target, in which case it will vary the fan speed in order to get as close to the target as possible. (Note! Humid weather conditions may limit what temperatures can be achieved.)
- The cooler can be set to a fan only mode, providing air circulation only.

MAGIQTOUCH CONTROLLER SETTINGS MENU

Your MagIQtouch Controller contains a settings menu which gives you access to information about your Breezair evaporative cooler and to extra functions including:

ABOUT APPLIANCE

Access information about the appliances installed in your system.

MIN/MAX SET TEMPERATURE

You can change the minimum and maximum temperature displayed on your slider, depending on what temperature range you prefer your system to work within.

NIGHT QUIET MODE

Restrict fan speed over the night time period for a quiet night's sleep.

MANUAL DRAIN

This will turn the cooler off and drain the tank.

PAD FLUSH

This will turn the cooler off and run the pumps for a specified time. Use this feature to flush the cooler pads or in the event of a bushfire.

DRAIN AND DRY

This option allows you to nominate a time each day when the cooler will drain the tank and run the fan for 1 hour.

AUTOCLEAN

Select the preferred cleaning interval (50 / 100 / 200 hrs). At 8.00am after the selected running hours has been reached, the cooler will drain the tank, fill with fresh water and operate the pump for 5 minutes. When complete, drains the tank and returns to previous operation mode.

Note! There are some settings that are just for trained service agents or installers. You won't be able to access any of these options without a pin code.

WATER MANAGEMENT

Your Breezair evaporative cooler will be fitted with a WaterManager™ system, or a continuous bleed system. Check with your dealer to determine which system has been installed.

WATERMANAGER™

Breezair evaporative coolers are fitted with the WaterManager™ feature which automatically monitors the quality of the water in the cooler.

The WaterManager™ partially drains the existing water in the cooler to allow it to be replaced with fresh water, only when it is needed. Therefore, you may notice your cooler draining water occasionally. How often the WaterManager™ performs this operation depends upon the quality of the water supply and the rate of evaporation. In areas of poor water quality, the WaterManager™ will operate more often as it tries to maintain the optimum water quality in the cooler. This maximises the cooling effect and life of the cooling pads.

The WaterManager™ allows you to specify either high or low salinity settings. The low salinity setting is used in specific circumstances only. We recommend talking with your dealer before adjusting this setting.

The high salinity setting is designed to operate the cooler at a maximum safe salinity level to maintain a normal working life. It also results in a minimum usage of water.

Note! High salinity outlet water can be used on saline tolerant gardens, but should not be used on salt sensitive grasses or plants.

The factory default WaterManager™ setting is HI. For areas operating with bore water, WaterManager™ should be switched to off. This will disable the salinity measuring circuit and simply drain water from the tank every 2 hours of operation.

DRAIN VALVE

The WaterManager™ system is installed with a drain valve and it is accompanied by the WaterManager™ salinity probes. When the tank's water salinity level reaches a preset level the WaterManager™ will open the drain valve and release saline water. Fresh water will then be added diluting any minerals or salts accumulated. The WaterManager™ will continue to monitor and drain water as required.

Alternatively, the cooler can be set to drain saline water at a preset period of pump operating time. This can be set by changing the salinity control method selector via the cooler settings screens.

Note! When the cooler's tank is empty and the cooler is turned on again, the fan operation will be delayed as the tank is refilled and the pads are saturated.

CONTINUOUS BLEED SYSTEM

During operation, the bleed system will drain small amounts of water. This ensures fresh water is continually added to dilute salt accumulation in the water caused through evaporation. This helps keep the air cooler in good condition and ensure optimum performance. The bleed rate will depend on local operating conditions and will be set by the installer.

POWER OUTAGES

After a power outage the MagIQtouch Controller will prompt you to enter the date and time. If the AUTO RESTART option is switched on in the SETTINGS menu, the following actions will result:

If the cooler was last running in MANUAL mode, it will automatically restart only after the date and time have been confirmed.

If the cooler was last running in PROGRAM mode, it will automatically restart, even before the time and date have been set, according to the last time recorded before the power outage.

HEALTH REGULATIONS

In some states, regulations require that evaporative air coolers be serviced at specific intervals.

SEASONAL MAINTENANCE

Maintenance Schedule servicing is essential to ensure the cooler operates efficiently for many years. **Seasonal Maintenance** is only required if you have a cooler fitted with a bleed system. The following pages outline the suitable maintenance requirements to ensure that your cooler continues to operate efficiently.

If your cooler is fitted with a drain valve, no **Seasonal Maintenance** is required. However, we require that the following components and the operation thereof, be checked after the first year, then every 2 years as **Maintenance Schedule** servicing.

- Water distribution channels.
- Pump.
- Drain valve.
- Solenoid and associated filter / fittings.
- Fan motor operation.
- Float valve.
- Salinity probes.

Seasonal Maintenance services must be performed before and after the summer season. **Maintenance Schedule** servicing should be performed before the summer season. It is important to note that all evaporative coolers have components that may need periodic replacement (eg. filter pads, hoses, o-rings etc).

WARNING! As your cooler is mounted on the roof, we suggest that any maintenance or checks be carried out by an authorised Seeley International dealer or service agent. Climbing onto the roof can be hazardous and could result in injury to you and damage to your property.

Note! Maintenance Schedule servicing may be required more frequently in adverse environmental situations and very dusty areas.

PRE-SEASON

- Turn off power supply to the cooler.
- Inspect external cabinet, dropper and flashing for any damage or deterioration.
- Check water supply to the cooler.
- Remove pad frames
- Ensure power is off at isolating switch inside the cooler.
- Gently wash pad frames to remove any dust build up during winter. **IMPORTANT!** Do not damage the pads with high pressure water spray.
- Inspect pad retention pins and washers for damage and that they are securely fitted.
- Replace the bleed system if it was removed during previous maintenance and ensure the O'ring is fitted. (If the cooler is fitted with a drain valve this will not be necessary as it will automatically close when the cooler turns on.
- Check fan motor, mounts and blades for damage.
- Turn on power supply to cooler and check electrical isolation switch operates correctly.
- Turn on the water and then the power to the cooler. Check water hose from pump to distributor cap is secure.
- Check water distribution channels in the lid are clean.
- Check drain hose from system is clear of blockages and there are no leaks.
- Check operation of float valve.
- Refit the pad frames & run the cooler.
- Check MagIQtouch controller operation.
- Check that all pads are evenly wet.

END OF SEASON

- Turn off power supply to the cooler.
- External inspection of cabinet, dropper duct and water supply valve.
- Turn off the water supply to the cooler.
- Remove the pad frames.
- Turn off the power at the isolating switch inside the cooler.
- Check and clean the water distributing channels in the lid.
- If a bleed system is installed, unclip and remove the bleed funnel. Allow the tank water to drain. Do not re-fit the bleed system at the end of the season. Do not lose the O'ring.
- Clean thoroughly the tank, pump filter and salinity probe if fitted.
- If a Drain Valve is fitted it will automatically drain. You can drain the cooler at any time by accessing the menu item located in the SETTINGS menu.
- Refit the pad frames.

WARNING! Ensure pad frames are fitted when operating the cooler.

SEASONAL MAINTENANCE - cont

REMOVING PAD FRAMES

Insert a flat screw driver tip into the slot as shown and lever until disengagement occurs.

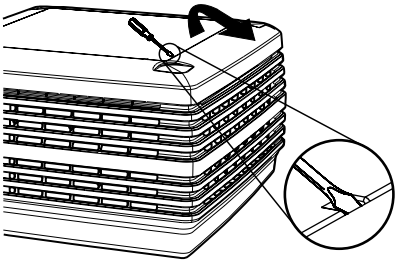

ILL974-B

Take hold of the pad frame and pull it towards you until the internal side clips disengage.

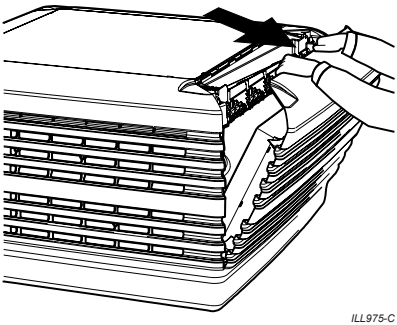

ILL975-C

Pivot the pad frame outwards and lift up. Take care not to damage the pad.

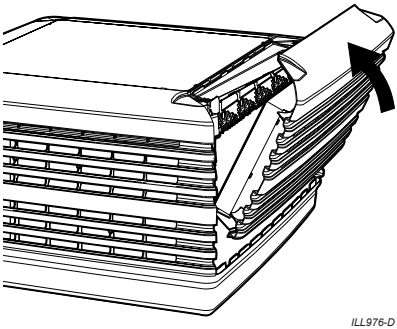

ILL976-D

COOLER ISOLATION SWITCH

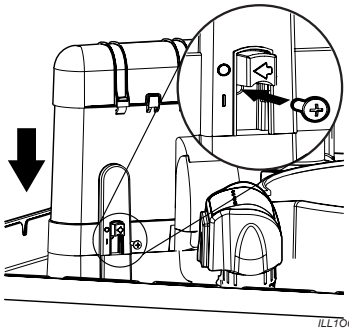

ILL1060-C

WATER DISTRIBUTION CHANNELS

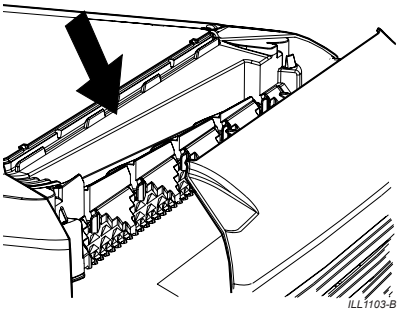

ILL1103-B

REMOVING THE BLEED SYSTEM

Unclip and remove the bleed system as shown.

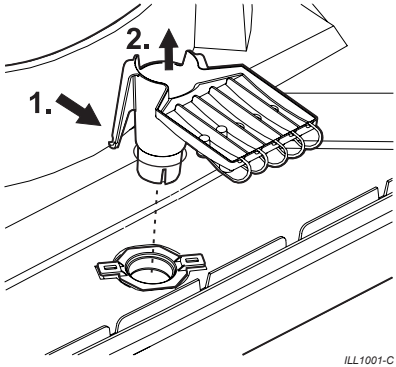

ILL1001-C

SEASONAL MAINTENANCE - cont

HIGH DUTY CYCLE OPERATION MAINTENANCE

For coolers operating more than 12 hours per day continuously throughout the year the following maintenance program is required:

6 monthly maintenance:

- Inspect the cooler and check the pump, drain valve (if fitted), solenoid and fan motor.
- Check the pads and replace as required.
- Check and clean the tank and the pump filter.

12 monthly maintenance:

- Replace plastic fan and motor collet and check motor shaft for wear.

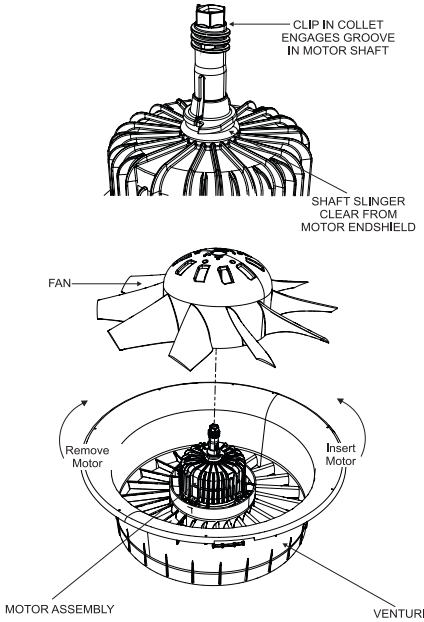

ILL1897-A

MAINTENANCE SCHEDULE SERVICE CHECKLIST

Service Item	Check/Adjust					Clean					Replace				
	1	2	3	4	5	1	2	3	4	5	1	2	3	4	5
Water Distribution System															
Chillcel Pads (replace as required)															
Pad Retaining Washers/Pins															
Tank/Water Reservoir															
Pump Filter															
Water Probes															
System Washers, Seals and O'Rings (replace as required)															
Drain Valve/Bleed System Operation															
Component Function															
Pump Operation															
Drain Valve Operation															
Motor Operation (reset motor amps where required)															
Solenoid Operation															
Wall Control Operation															
General Operation															
Water Level Set Point															
Water Fill Time															
Water Drain Time															
Water Distribution across Pads															
Airflow through system/Outlets															
General Product condition (includes correct fitting of all components and items - replace as required)															

Service No.	Service Date	Service Technician	Service Company
No.1	.....	.....	.....
No.2	.....	.....	.....
No.3	.....	.....	.....
No.4	.....	.....	.....
No.5	.....	.....	.....

TROUBLESHOOTING

Symptom	Cause	Action
Unpleasant odour	Odour from the new pads	• Use the 'Pad Flush' function in the SETTINGS menu of your MagIQtouch Controller to flush pads. • During initial running in period drain tank periodically to allow fresh water to flush pads.
Inadequate cooling	Dry pads	Ensure the water supply is turned on. Then check the water flow to the pads.
	Insufficient exhaust openings for conditioned air	Ensure sufficient exhaust openings.
	Excessive ambient humidity	On days during the summer when the ambient humidity is high, the cooler will not reduce the temperature as much as on drier days.
Cooler turns ON and OFF	Fault in the cooler	Contact the Dealer or Service number.

If your MagIQtouch Controller prompts you to call a service agent, please contact your local Dealer.

When you contact your Dealer regarding service please quote the cooler serial and model number

Affix serial & model number sticker here

Service

Contact your local Breezair dealer for Service

seeleyinternational.com

MANUFACTURED BY: SEELEY INTERNATIONAL PTY LTD
112 O'SULLIVAN BEACH RD, LONSDALE SA, 5160. AUSTRALIA

IMPORTED BY: SEELEY INTERNATIONAL (EUROPE) LTD
5 PAPPLEWICK LANE, HUCKNALL, NOTTINGHAM, NOTTINGHAMSHIRE, NG15 7TN, UNITED KINGDOM

SEELEY INTERNATIONAL (AMERICAS) LTD
1202 NORTH 54TH AVENUE, BUILDING 2, SUITE 117, PHOENIX, ARIZONA 85043, USA

SEELEY INTERNATIONAL (AFRICA) PTY LTD
6 WITTON ROAD, FOUNDERSVIEW SOUTH, MODDERFONTEIN 1609, GAUTENG, SOUTH AFRICA

It is the policy of Seeley International to introduce continual product improvement. Accordingly, specifications are subject to change without notice. Please consult with your dealer to confirm the specifications of the model selected.

FUJITSU

Refrigerant R410A INVERTER

AIR CONDITIONER

Wall mounted type

SERVICE MANUAL

INDOOR		ASUG09LMAS ASUG12LMAS
OUTDOOR		AOUG09LMAS1 AOUG12LMAS1

FUJITSU GENERAL LIMITED

SR_AS023EF_05
2020.03.25

Notices:
- Product specifications and design are subject to change without notice for future improvement.
- For further details, please check with our authorized dealer.

Trademarks

FGLair™ is trademark of Fujitsu General Limited in the United States, other countries or both.

Google Play™ is trademark of Google Inc.

App Store® is a service mark of Apple Inc., registered in the U.S. and other countries.

Copyright © 2020 Fujitsu General Limited. All rights reserved.

CONTENTS

1. GENERAL INFORMATION

2. TECHNICAL DATA AND PARTS LIST

3. TROUBLESHOOTING

4. CONTROL AND FUNCTIONS

5. FILED WORKING

1. GENERAL INFORMATION

CONTENTS

1. GENERAL INFORMATION

1. Specifications 01-1
1-1. Indoor unit 01-1
1-2. Outdoor unit.....01-3
2. Dimensions 01-4
2-1. Indoor unit 01-4
2-2. Outdoor unit.....01-6

1. Specifications

1-1. Indoor unit

Type					Wall mounted	
					Inverter heat pump	
Model name					ASUG09LMAS	ASUG12LMAS
Power supply					208/230 V ~ 60 Hz	
Power supply intake					Outdoor unit	
Available voltage range					187—253 V	
Capacity	Cooling	Rated		kW	2.64	3.52
				Btu/h	9,000	12,000
		Min.—Max.		kW	1.0—3.2	1.0—3.9
				Btu/h	3,400—10,900	3,400—13,300
	Heating	Rated		kW	3.52	4.69
				Btu/h	12,000	16,000
		Min.—Max.		kW	0.82—4.4	0.82—5.6
				Btu/h	2,800—15,000	2,800—19,100
	Heating (17 °F)*1	Rated		kW	2.17	3.02
				Btu/h	7,400	10,300
		Max.		kW	2.96	3.72
				Btu/h	10,100	12,700
Input power	Cooling	Rated		kW	0.63	0.96
		Min.—Max.			0.14—0.92	0.14—1.27
	Heating	Rated			0.84	1.28
		Min.—Max.			0.14—1.61	0.14—1.67
	Heating (17 °F)*1	Rated			0.68	1.04
		Max.			1.34	1.39
Current	Cooling	Rated		A	3.1	4.7
	Heating				4.0	6.0
EER	Cooling			kW/kW	4.19	3.66
				Btu/hW	14.3	12.5
COP	Heating			kW/kW	4.19	3.66
				Btu/hW	14.3	12.5
SEER	Cooling			Btu/hW	26.5	23.0
HSPF	Heating			Btu/hW	13.0	12.5
Power factor	Cooling			%	88.4	88.8
	Heating				91.3	92.8
Moisture removal				pints/h (L/h)	2.7 (1.3)	3.8 (1.8)
Maximum operating current*2	Cooling			A	6.4	6.9
	Heating				7.9	9.4
Fan	Airflow rate	Cooling	HIGH	CFM (m^3/h)	453 (770)	453 (770)
			MED		353 (600)	353 (600)
			LOW		265 (450)	265 (450)
			QUIET		147 (250)	147 (250)
		Heating	HIGH		453 (770)	453 (770)
			MED		377 (640)	377 (640)
			LOW		306 (520)	306 (520)
			QUIET		182 (310)	182 (310)
	Type × Q'ty				Crossflow fan × 1	
	Motor output			W	49	
Sound pressure level*3	Cooling	HIGH		dB (A)	43	43
		MED			36	36
		LOW			30	30
		QUIET			19	19
	Heating	HIGH			43	43
		MED			38	38
		LOW			33	33
		QUIET			21	21
Heat exchanger type	Dimensions (H × W × D)			in (mm)	Main1: 8-1/4 × 26-3/8 × 1-1/16 (210 × 670 × 26.6) Main2: 4-7/16 × 26-3/8 × 13/16 (112 × 670 × 20) Sub: 3-5/16 × 26-3/8 × 1/2 (84 × 670 × 13.3)	
	Fin pitch			FPI	Man1: 21 Main2: 23 Sub: 18	
	Rows × Stages				Main1: 2 × 10 Main2: 2 × 7 Sub: 1 × 4	
	Pipe type				Copper	
	Fin type				Aluminum	
Enclosure	Material				Polystyrene	
	Color				White Approximate color of Munsell N 9.25/	
Dimensions (H × W × D)	Net			in (mm)	10-5/8 × 32-13/16 × 8-3/4 (270 × 834 × 222)	
	Gross				10-7/8 × 36 × 13-1/16 (277 × 914 × 332)	
Weight	Net			lb (kg)	22 (10)	
	Gross				29 (13)	
Connection pipe	Size	Liquid		in (mm)	Ø 1/4 (6.35)	
		Gas			Ø 3/8 (Ø 9.52)	
	Method				Flare	
Drain hose	Material				PP+HDPE	
	Tip diameter			in (mm)	Ø15/32 (Ø 11.8) (I.D.), Ø19/32 to 21/32 (Ø 15.0 to 16.8) (O.D.)	
Operation range	Cooling			°F (°C)	64 to 90 (18 to 32)	
				%RH	80 or less	
	Heating			°F (°C)	60 to 86 (16 to 30)	
Remote controller type					Wireless (Wired, Mobile app*4 [FGLair™] [option])	

Type	Wall mounted	
	Inverter heat pump	
Model name	ASUG09LMAS	ASUG12LMAS

NOTES:

- Specifications are based on the following conditions:
  - Cooling: Indoor temperature of 80 °F (26.67 °CDB) /67 °FWB (19.44 °CWB), and outdoor temperature of 95 °FDB (35 °CDB) / 75 °FWB (23.9 °CWB).
  - Heating: Indoor temperature of 70 °FDB (21.11 °CDB) /60 °FWB (15.56 °CWB), and outdoor temperature of 47 °FDB (8.33 °CDB) /43 °FWB (6.11 °CWB).
  - *1: Heating (17 °F): Indoor temperature of 70 °FDB (21.11 °CDB) /60 °FWB (15.56 °CWB), and outdoor temperature of 17 °FDB (-8.33 °CDB) /15 °FWB (-9.44 °CWB).
  - Pipe length: 25 ft (7.5 m), Height difference: 0 ft (0 m). (Between outdoor unit and indoor unit.)
- Protective function might work when using it outside the operation range.
- *2: Maximum current is maximum value when operated within the operation range.
- *3: Sound pressure level:
  - Measured values in manufacturer's anechoic chamber.
  - Because of the surrounding sound environment, the sound levels measured in actual installation conditions might be higher than the specified values here.
- *4: Available on Google Play™ store or on App Store®. Optional WLAN adapter is also required. For details, refer to the setting manual.

1-2. Outdoor unit

Type				Inverter heat pump	
Model name				**AOUG09LMAS1**	**AOUG12LMAS1**
Power supply				208/230 V ~ 60 Hz	
Power supply intake				Outdoor unit	
Available voltage range				187—253 V	
Starting current			A	4.0	6.0
Fan	Airflow rate	Cooling	CFM (m^3/h)	954 (1,620)	1,065 (1,810)
		Heating		954 (1,620)	1,065 (1,810)
	Type × Q'ty			Propeller fan × 1	
	Motor output		W	23	
Sound pressure level *1		Cooling	dB (A)	46	49
		Heating		48	51
Heat exchanger type		Dimensions (H × W × D)	in (mm)	Main1: 19-13/16 × 34-15/16 × 11/16 (504 × 888 × 18.19) Main2: 19-13/16 × 20-1/16 × 11/16 (504 × 510 × 18.19)	Main1: 19-13/16 × 34-11/16 × 11/16 (504 × 881 × 18.19) Main2: 19-13/16 × 33-1/2× 11/16 (504 × 851 × 18.19)
		Fin pitch	FPI	20	
		Rows × Stages		Main1: 1 × 24 Main2: 1 × 24	
		Pipe type		Copper	
		Fin type	Type (Material)	Aluminum	
			Surface treatment	PC fin	
Compressor	Type			DC rotary	
	Motor output		W	900	
Refrigerant		Type		R410A	
		Charge	lb oz	2 lb 2 oz	2 lb 3 oz
			g	950	1,000
Refrigerant oil		Type		RB68A	
		Amount	in^3 (cm^3)	20.7 (340)	
Enclosure		Material		Steel sheet	
		Color		Beige Approximate color of Munsell 10YR 7.5/1.0	
Dimensions (H × W × D)	Net		in (mm)	21-5/16 × 31-7/16 × 11-7/16 (542 × 799 × 290)	
	Gross			23-11/16 × 37 × 14-3/4 (602 × 940 × 375)	
Weight	Net		lb (kg)	68 (31)	71 (32)
	Gross			75 (34)	77 (35)
Connection pipe	Size	Liquid	in (mm)	Ø 1/4 (Ø 6.35)	
		Gas		Ø 3/8 (Ø 9.52)	
	Method			Flare	
	Pre-charge length		ft (m)	49 (15)	
	Max. length			66 (20)	
	Max. height difference			49 (15)	
Operation range		Cooling	°F (°C)	14 to 115 (-10 to 46)	
		Heating		5 to 75 (-15 to 24)	
Drain hose		Material		PP	
		Tip diameter	in (mm)	Ø 1/2 (Ø 13.0) (I. D.), Ø 5/8 to 11/16 (Ø 16.0 to 16.8) (O. D.)	

NOTES:

- Specifications are based on the following conditions:
  - Cooling: Indoor temperature of 80 °FDB (26.67 °CDB) / 67 °FWB (19.44 °CWB), and outdoor temperature of 95 °FDB (35 °CDB) / 75 °FWB (23.9 °CWB).
  - Heating: Indoor temperature of 70 °FDB (21.11 °CDB) / 60 °FWB (15.56 °CWB), and outdoor temperature of 47 °FDB (8.33 °CDB) / 43 °FWB (6.11 °CWB).
  - Pipe length: 25 ft (7.5 m), Height difference: 0 ft (0 m). (Between outdoor unit and indoor unit.)
- Protective function might work when using it outside the operation range.
- *1: Sound pressure level
  - Measured values in manufacturer's anechoic chamber.
  - Because of the surrounding sound environment, the sound levels measured in actual installation conditions might be higher than the specified values here.

2. Dimensions

2-1. Indoor unit

■ Models: ASUG09LMAS and ASUG12LMAS

Unit: in (mm)

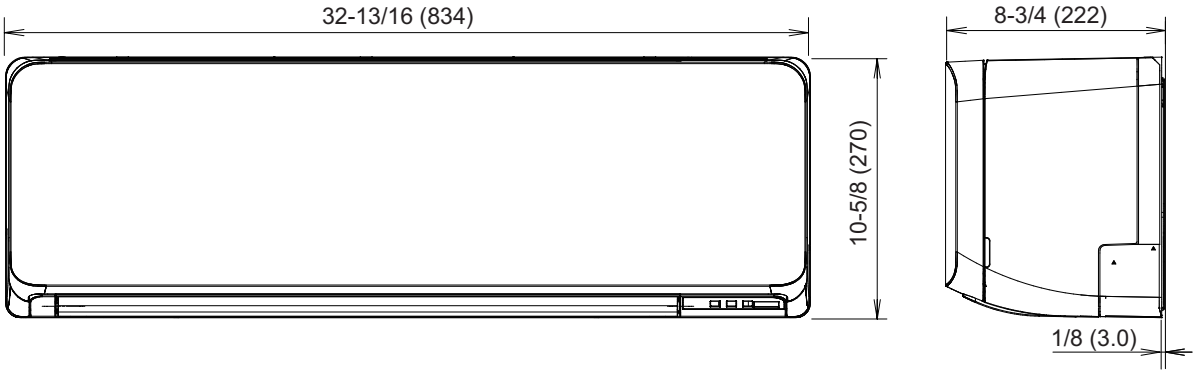

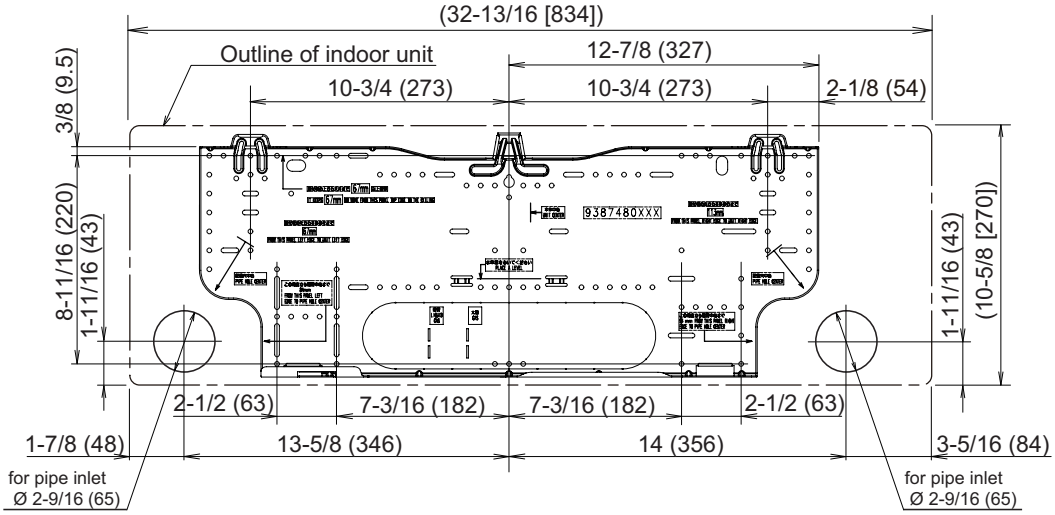

GENERAL INFORMATION

■ Installation space requirement

Provide sufficient installation space for product safety.

Unit: in (mm)

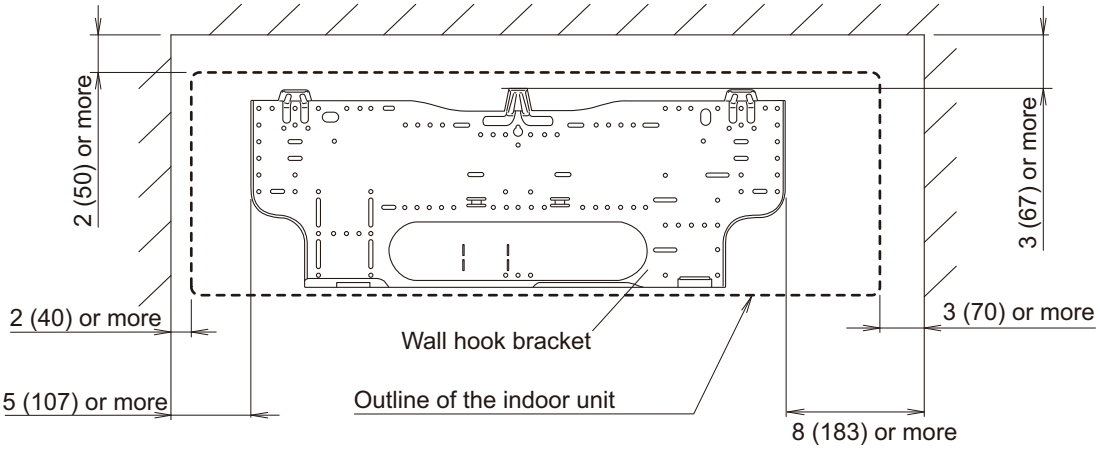

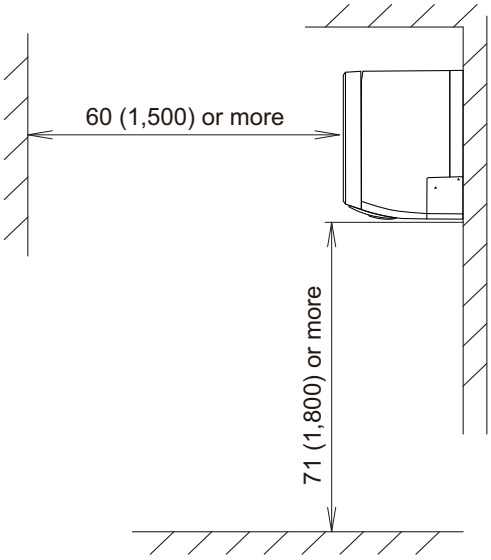

2-2. Outdoor unit

■ Models: AOUG09LMAS1 and AOUG12LMAS1

Unit: in (mm)

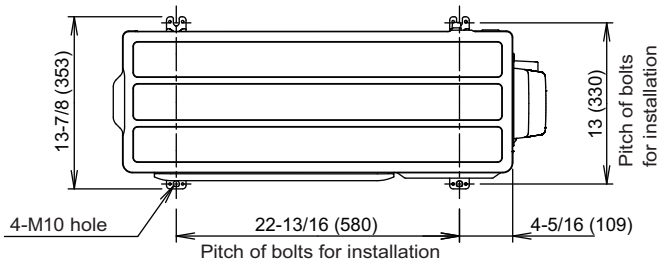

Top view

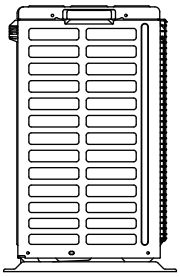

Side view

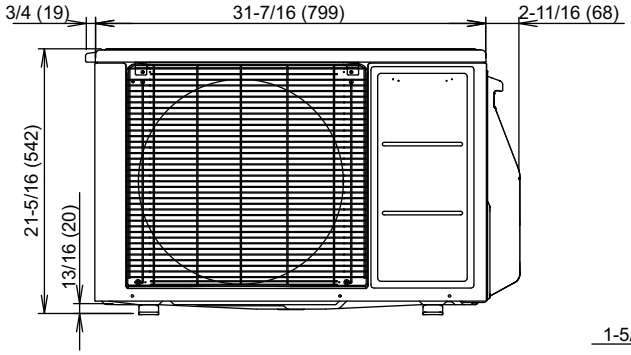

Front view

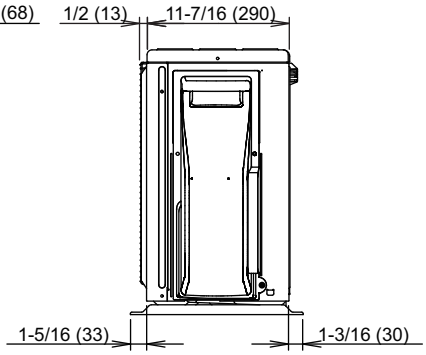

Side view

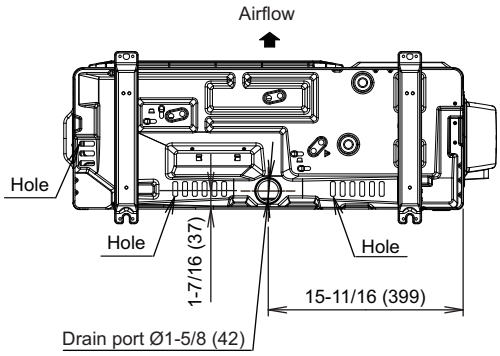

Bottom view

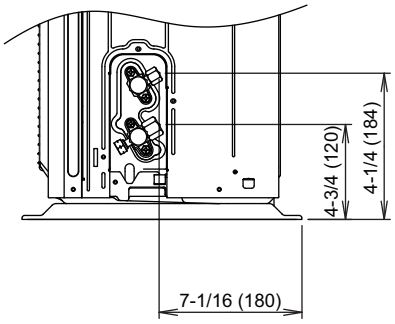

Side view (Valve part)

2. TECHNICAL DATA AND PARTS LIST

CONTENTS

2. TECHNICAL DATA AND PARTS LIST

1. Precautions.....02-1

2. Indoor unit parts list.....02-2

2-1. Models: ASUG09LMAS and ASUG12LMAS 02-2

3. Outdoor unit parts list.....02-6

3-1. Models: AOUG09LMAS1 and AOUG12LMAS1 02-6

4. Accessories 02-10

4-1. Indoor unit 02-10

4-2. Outdoor unit.....02-10

5. Optional parts 02-11

5-1. Indoor unit 02-11

6. Refrigerant system diagrams.....02-13

6-1. Models: AOUG09LMAS1 and AOUG12LMAS1 02-13

7. Wiring diagrams 02-14

7-1. Indoor unit 02-14

7-2. Outdoor unit.....02-15

8. PC board diagrams 02-16

8-1. Models: ASUG09LMAS and ASUG12LMAS 02-16

8-2. Models: AOUG09LMAS1 and AOUG12LMAS1 02-17

1. Precautions

When you start servicing, pay attention to the following points. For detailed precautions, refer to the installation manual of the products.

⚠ CAUTION

- Service personnel
  - Any person who is involved with working on or breaking into a refrigerant circuit should hold a current valid certificate from an industry-accredited assessment authority, which authorizes their competence to handle refrigerants safely in accordance with an industry recognized assessment specification.
  - Servicing shall only be performed as recommended by the equipment manufacturer. Maintenance and repair requiring the assistance of other skilled personnel shall be carried out under the supervision of the person competent in the use of flammable refrigerants.
  - Servicing shall be performed only as recommended by the manufacturer.
- Work
  - Work in confined spaces shall be avoided.
  - The area around the workspace shall be sectioned off.
  - Electric shock may occur. After turning off the power, always wait 5 minutes before touching electrical components.
  - Do not touch the fins of the heat exchanger. Touching the heat exchanger fins could result in damage to the fins or personal injury such as skin rupture.
  - Do not place any other electrical products or household belongings under the product.
  - Condensation dripping from the product might get them wet, and may cause damage or malfunction to the property.

- Service parts information and design are subject to change without notice for product improvement.
- For the latest information of the service parts, refer to our Service Portal.
  https://fujitsu-general.force.com/portal/
- Precise figure of the service parts listed in this manual may differ from the actual service parts.

2. Indoor unit parts list

2-1. Models: ASUG09LMAS and ASUG12LMAS

■ Exterior parts

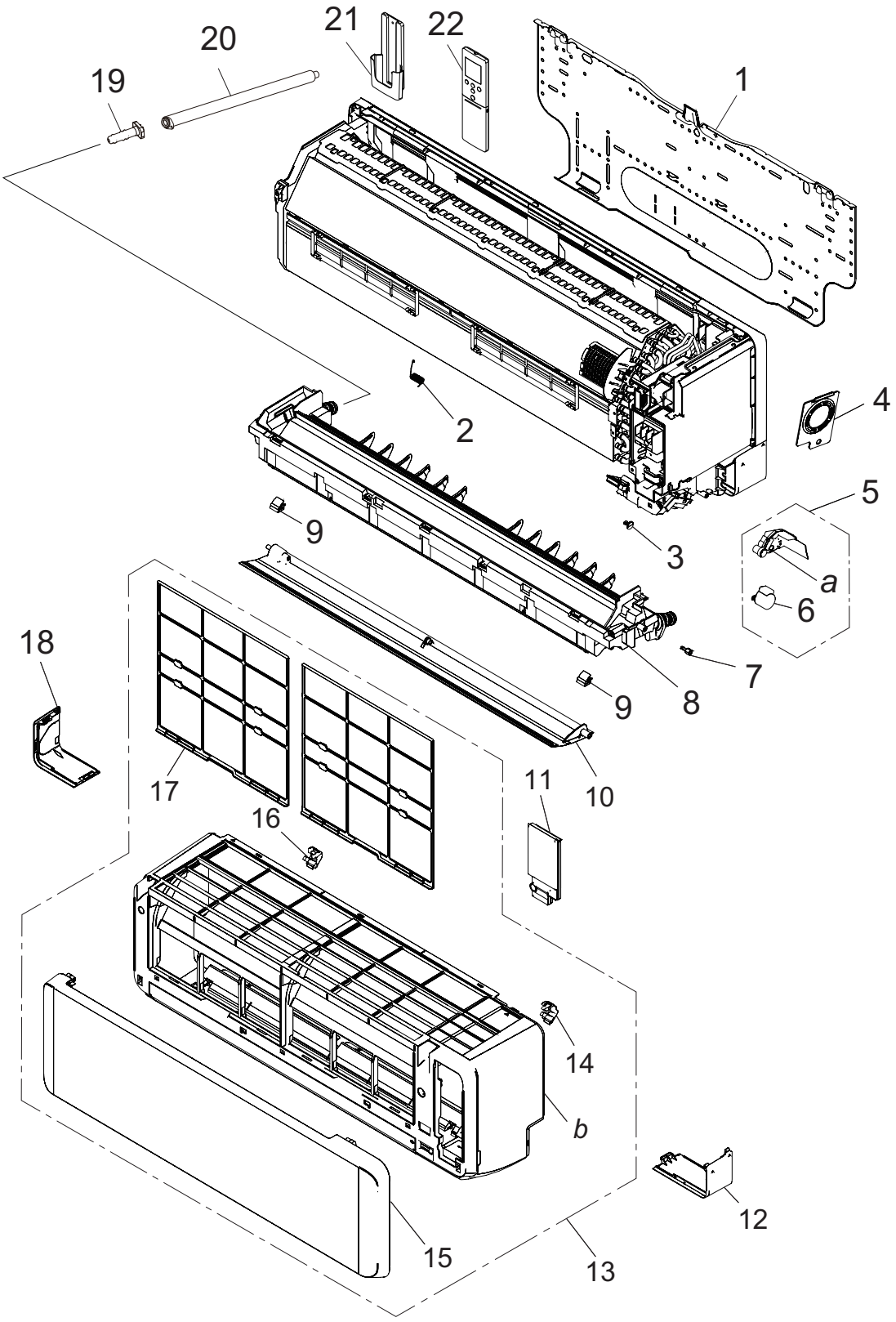

Item no.	Part no.	Part name	Service part
1	9387480009	Bracket panel	♦
2	9387471007	Louver spring	♦
3	9333608006	Bush	♦
4	9313951047	Conduit holder	♦
5	9387714036	Step motor holder assy	♦
6	9901011047	Step motor	♦
7	9332861006	Shaft cover	♦
8	9387590050	Drain pan total assy	♦
9	9387476002	Screw cap	♦
10	9387479003	U/D louver assy	♦
11	9387597035	Wire cover assy	♦
12	9387478020	Under cover R	♦
13	9387596458	Front panel total assy	♦
14	9333704005	Grille clamper R	♦
15	9387799057	Intake grill B	♦
16	9333719009	Grille clamper L	♦
17	9387473001	Air filter	♦
18	9387477023	Under cover L	♦
19	9316177017	Drain cap	♦
20	9316904002	Drain hose assy	♦
21	9318912005	Remote controller holder	♦
22	9332438772	Remote controller	♦
a	—	Step motor holder	—
b	—	Front panel	—

TECHNICAL DATA AND PARTS LIST

TECHNICAL DATA AND PARTS LIST

■ Base, evaporator, and control

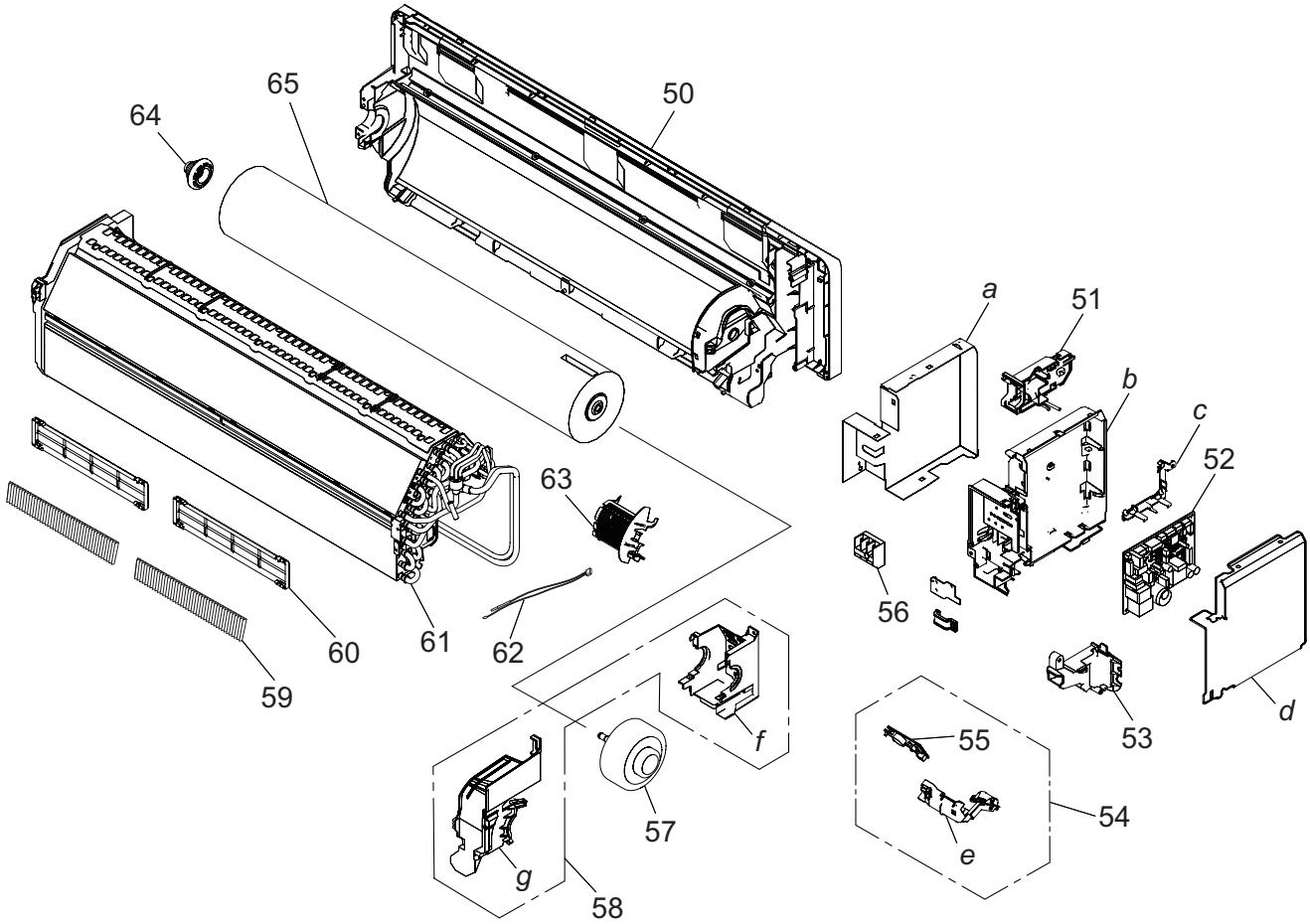

Item no.	Part no.	Part name	Service part
50	9387587012	Base assy	♦
51	9383765032	WLAN adapter holder assy	♦
52	9711141422	Main PCB (For 09 model)	♦
	9711141439	Main PCB (For 12 model)	♦
53	9387488043	Cable guide	♦
54	9711146076	Display assy	♦
55	9711147011	Indicator PCB	♦
56	9306489045	Terminal	♦
57	9603821012	Brushless motor	♦
58	9387589030	Motor case assy	♦
59	9317250009	Air clean filter assy	♦
60	9332911008	Electric filter holder	♦
61	9387593228	Evaporator total assy	♦
62	9900627041	Thermistor assy	♦
63	9387467000	Room thermistor holder	♦
64	9333628004	Bearing D assy	♦
65	9387055016	Crossflow fan assy	♦
a	—	Box shield	—
b	—	Control box	—
c	—	PCB holder A	—
d	—	Control cover	—
e	—	Display case assy	—
f	—	Motor case	—
g	—	Motor cover	

TECHNICAL DATA AND PARTS LIST

3. Outdoor unit parts list

3-1. Models: AOUG09LMAS1 and AOUG12LMAS1

■ Exterior parts and Chassis

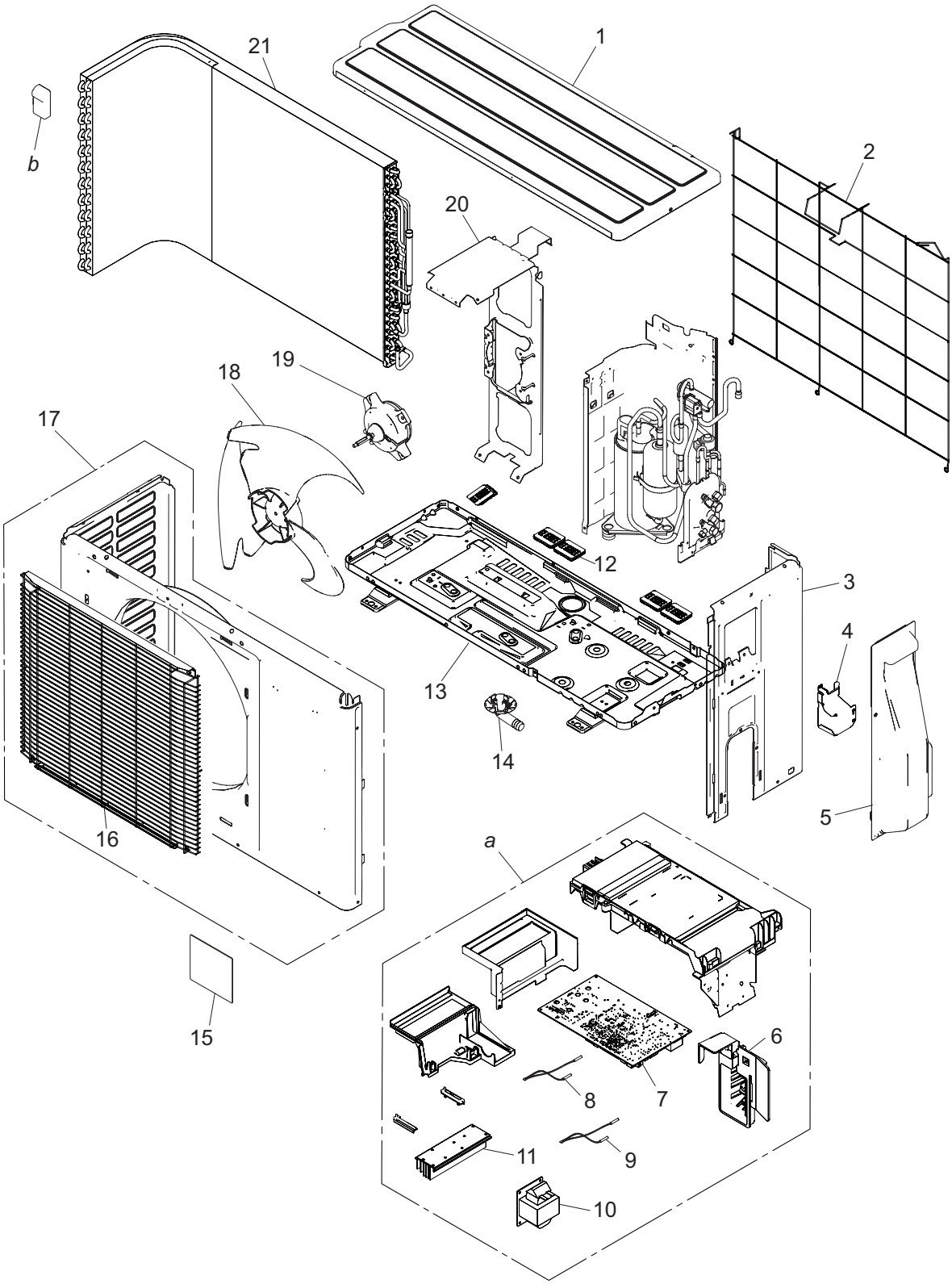

Item no.	Part no.	Part name	Service part
1	9322556028	Top panel assy	♦
2	9377840004	Protective net	♦
3	9322552259	Cabinet right assy	♦
4	9384268006	Conduit cover	♦
5	9322570055	Switch cover assy	♦
6	9322138002	Thermistor holder	♦
7	9709684030	Main PCB (For 09 model)	♦
	9709684047	Main PCB (For 12 model)	♦
8	9900565060	Thermistor assy	♦
9	9900727062	Thermistor assy	♦
10	9900583019	Reactor assy	♦
11	9322418005	Heat sink	♦
12	9383720000	Drain cap assy	♦
13	9323550025	Base assy	♦
14	9322144003	Drain pipe	♦
15	9317903011	Emblem	♦
16	9384265005	Fan guard	♦
17	9322555199	Front panel assy	♦
18	9322136008	Propeller fan	♦
19	9603657017	Brushless motor	♦
20	9322553010	Motor bracket assy	♦
21	9322274021	Condenser total assy (For 09 model)	♦
	9322275004	Condenser total assy (For 12 model)	♦
a	—	Inverter assy	
b	—	Hair pin cushion	

TECHNICAL DATA AND PARTS LIST

■ Compressor

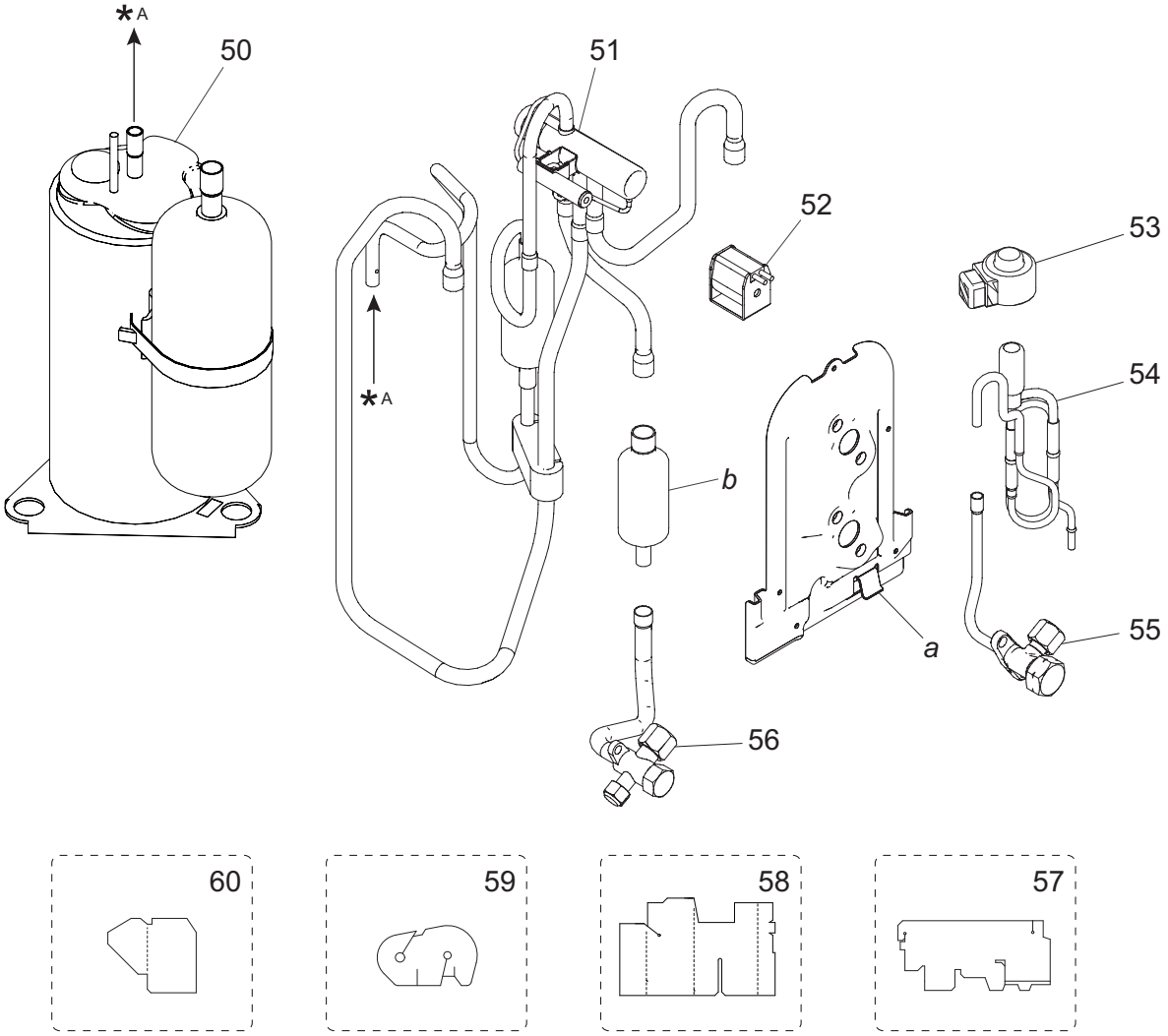

TECHNICAL DATA AND PARTS LIST

Item no.	Part no.	Part name	Service part
50	9384354006	Compressor assy	♦
51	9322444011	4-way valve assy	♦
52	9970110160	Solenoid	♦
53	9970173028	Expansion valve coil	♦
54	9322463029	Pulse motor valve assy	♦
55	9322474001	2-way valve assy	♦
56	9322475008	3-way valve assy	♦
57	9322535009	S-insulator B	♦
58	9322536020	S-insulator F	♦
59	9322537003	S-insulator H	♦
60	9323045002	S-insulator V	♦
a	—	Valve bracket	—
b	—	Muffler	—

TECHNICAL DATA AND PARTS LIST

4. Accessories

4-1. Indoor unit

■ Models: ASUG09LMAS and ASUG12LMAS

Part name	Exterior	Q'ty	Part name	Exterior	Q'ty
Operating manual		1	Tapping screw (large)		5
Installation manual		1	Tapping screw (small)		2
Wall hook bracket	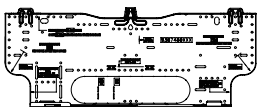	1	Cloth tape	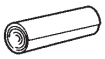	1
Remote controller		1	Filter holder		2
Remote controller holder		1	Air cleaning filters	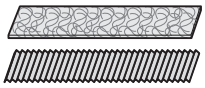	1
Battery	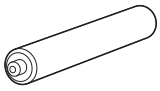	2			

4-2. Outdoor unit

■ Models: AOUG09LMAS1 and AOUG12LMAS1

Part name	Exterior	Q'ty	Part name	Exterior	Q'ty
Installation manual		1	Cable tie		2
Drain pipe		1	Drain cap	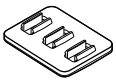	5

5. Optional parts

5-1. Indoor unit

■ Controllers

Exterior	Part name	Model name	Summary
	Wired remote controller	UTY-RNRUZ*	Easy finger touch operation with LCD panel. Backlit LCD enables easy operation in a dark room. Wire type: Non-polar 2-wire Optional communication kit is necessary for installation. **NOTE:** When this remote controller is connected, wireless remote controller cannot be used. 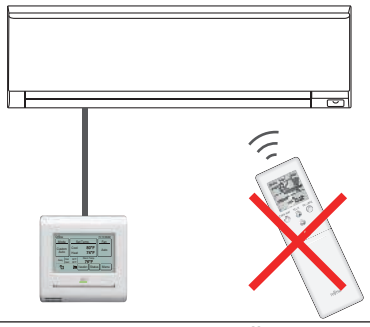
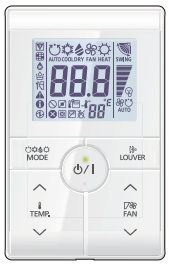	Simple remote controller	UTY-RSRY	Compact remote controller concentrates on the basic functions such as Start/Stop, fan control, temperature setting, and operation mode. Wire type: Non-polar 2-wire Optional communication kit is necessary for installation.
	Simple remote controller	UTY-RHRY	Compact remote controller concentrates on the basic functions such as Start/Stop, fan control, and temperature setting. Wire type: Non-polar 2-wire Optional communication kit is necessary for installation.

NOTES:

- Available functions may differ by the remote controller. For details, refer to the operation manual.
- When using a Wireless LAN adapter, group controlling system of the wired remote controller is prohibited.

■ Others

Exterior	Part name	Model name	Summary
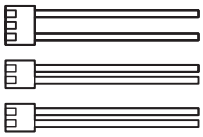	External connect kit	UTY-XWZXZ5	Required when external device is connected.

Exterior	Part name	Model name	Summary
	External input and output PCB	UTY-XCSXZ2	Use to connect with external devices and air conditioner PCB. Optional External connect kit is necessary for installation.
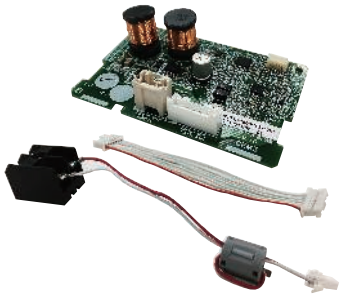	Communication kit	UTY-TWRXZ2	Use to connect Non-polar 2-core wired remote controller.
	Wireless LAN adapter	UTY-TFSXF1	Remotely manage an air conditioning system using mobile devices such as smartphones and tablets.

TECHNICAL DATA AND PARTS LIST

6. Refrigerant system diagrams

6-1. Models: AOUG09LMAS1 and AOUG12LMAS1

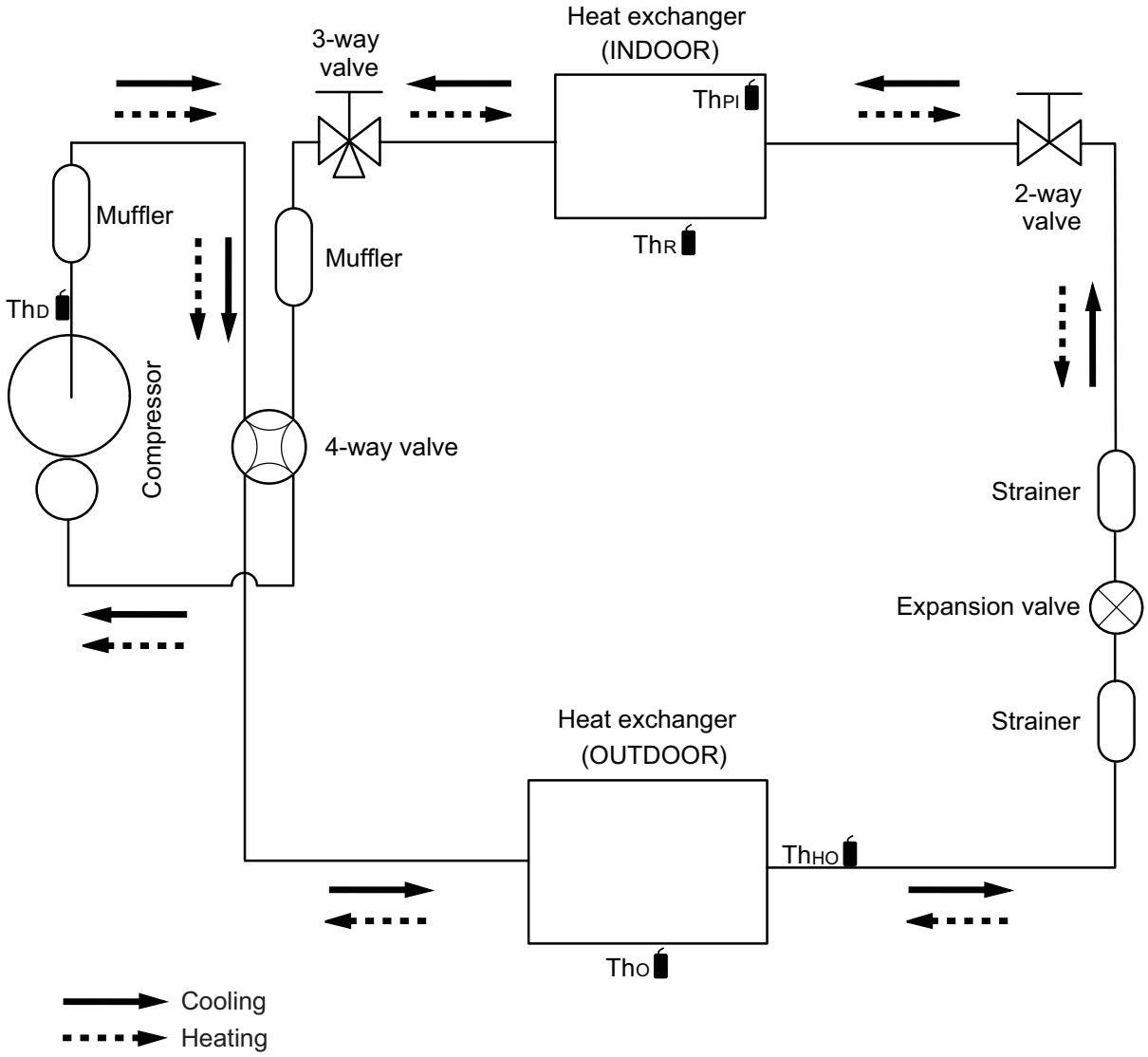

ThD : Thermistor (Discharge temperature)

ThO : Thermistor (Outdoor temperature)

ThHO: Thermistor (Heat exchanger out temperature)

ThR : Thermistor (Room temperature)

ThPI : Thermistor (Pipe temperature)

7. Wiring diagrams

7-1. Indoor unit

■ Models: ASUG09LMAS and ASUG12LMAS

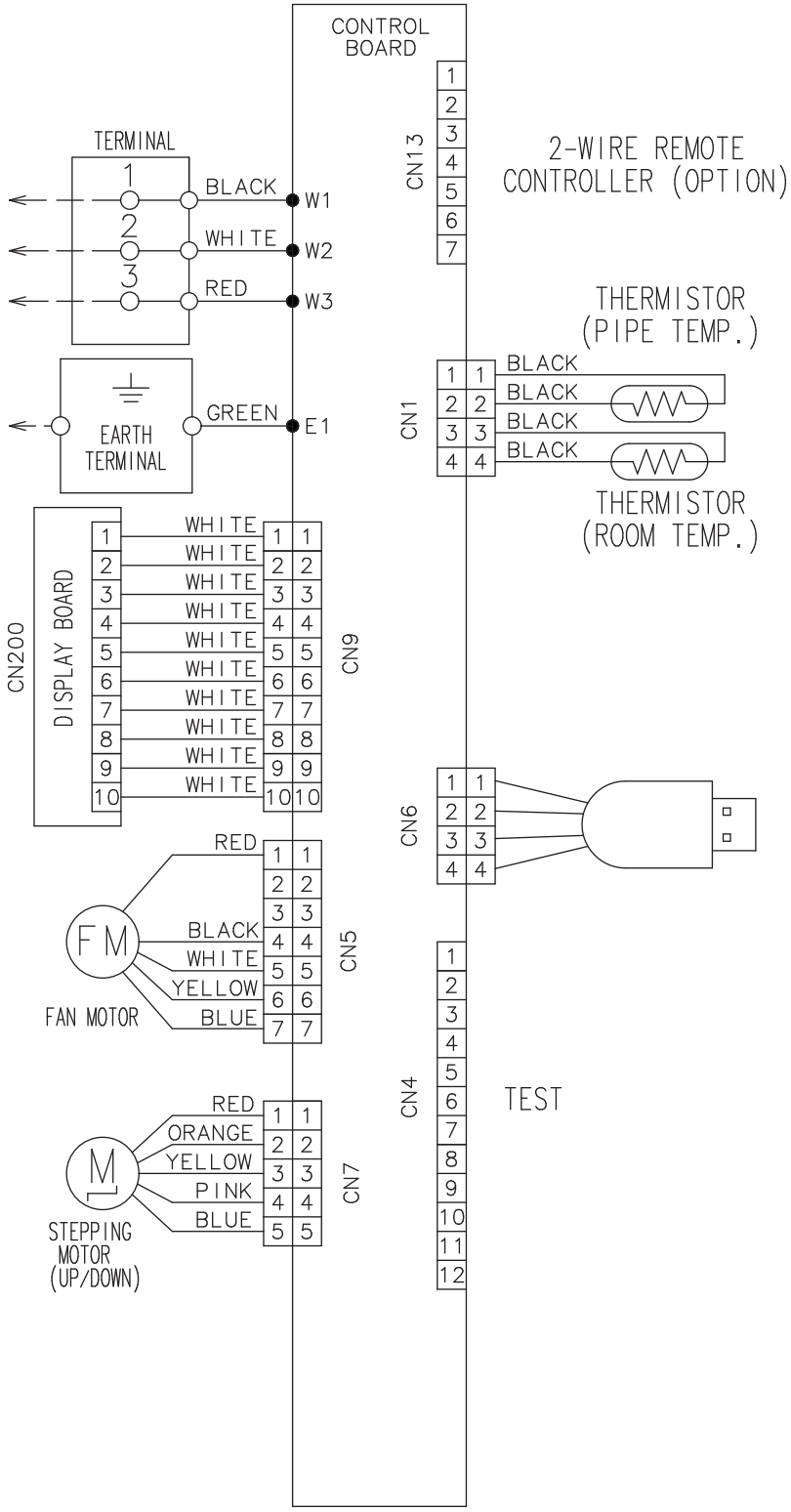

7-2. Outdoor unit

■ Models: AOUG09LMAS1 and AOUG12LMAS1

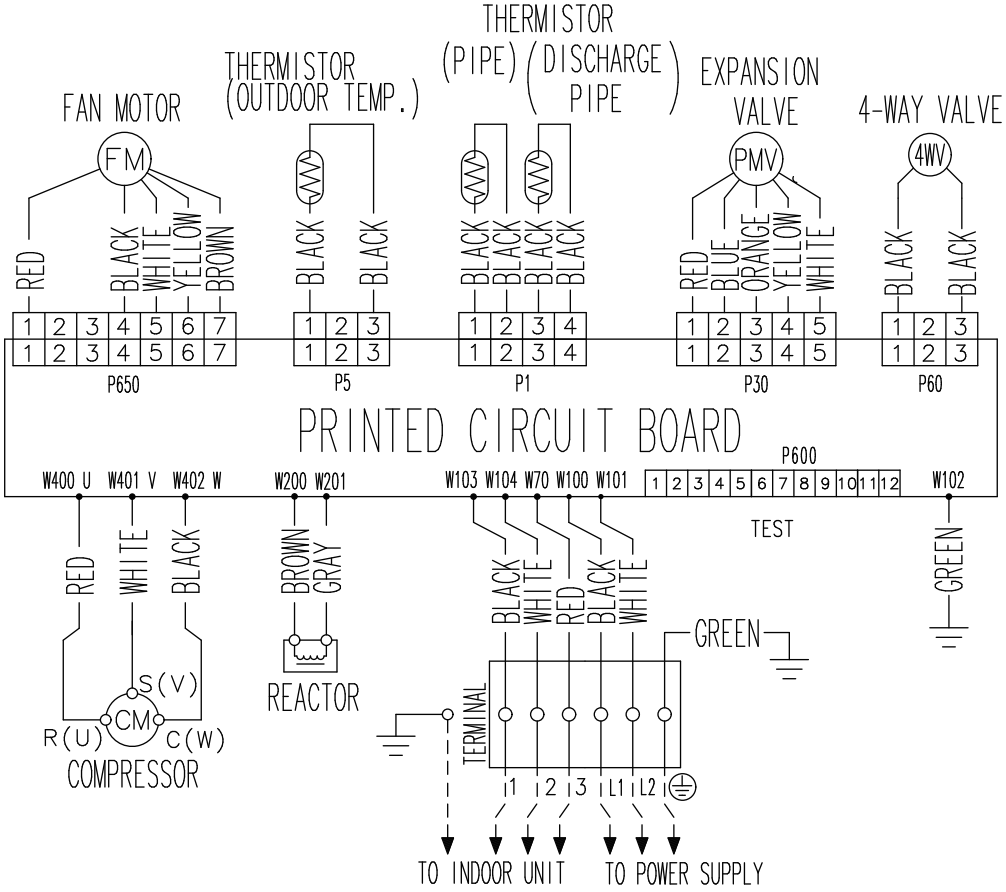

8. PC board diagrams

8-1. Models: ASUG09LMAS and ASUG12LMAS

TECHNICAL DATA AND PARTS LIST

CN5 DC Fan motor

Pin No.	Terminal code	Function of terminal	Lead wire color
1	Vm	Motor power voltage input	Red
2	——	——	——
3	——	——	——
4	GND	GND	Black
5	Vcc	Control power voltage input	White
6	Vsp	Speed control voltage input	Yellow
7	FG	Revolution pulse output	Blue

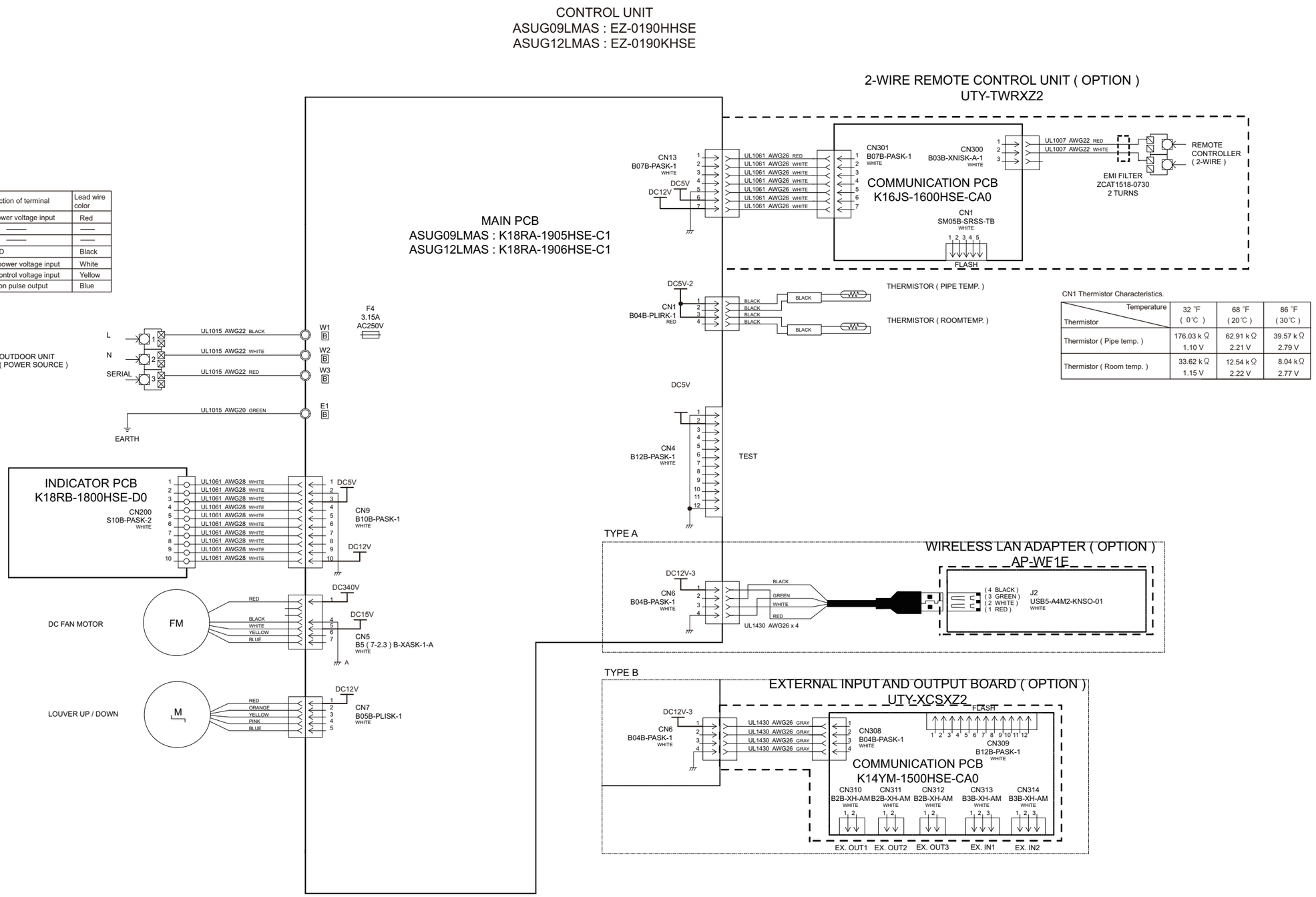

CN1 Thermistor Characteristics.

Thermistor \ Temperature	32 °F (0 °C)	68 °F (20 °C)	86 °F (30 °C)
Thermistor (Pipe temp.)	176.03 k Ω 1.10 V	62.91 k Ω 2.21 V	39.57 k Ω 2.79 V
Thermistor (Room temp.)	33.62 k Ω 1.15 V	12.54 k Ω 2.22 V	8.04 k Ω 2.77 V

8-2. Models: AOUG09LMAS1 and AOUG12LMAS1

INVERTER ASSEMBLY
AOUG09LMAS1 : EZ-01911HUE
AOUG12LMAS1 : EZ-01912HUE

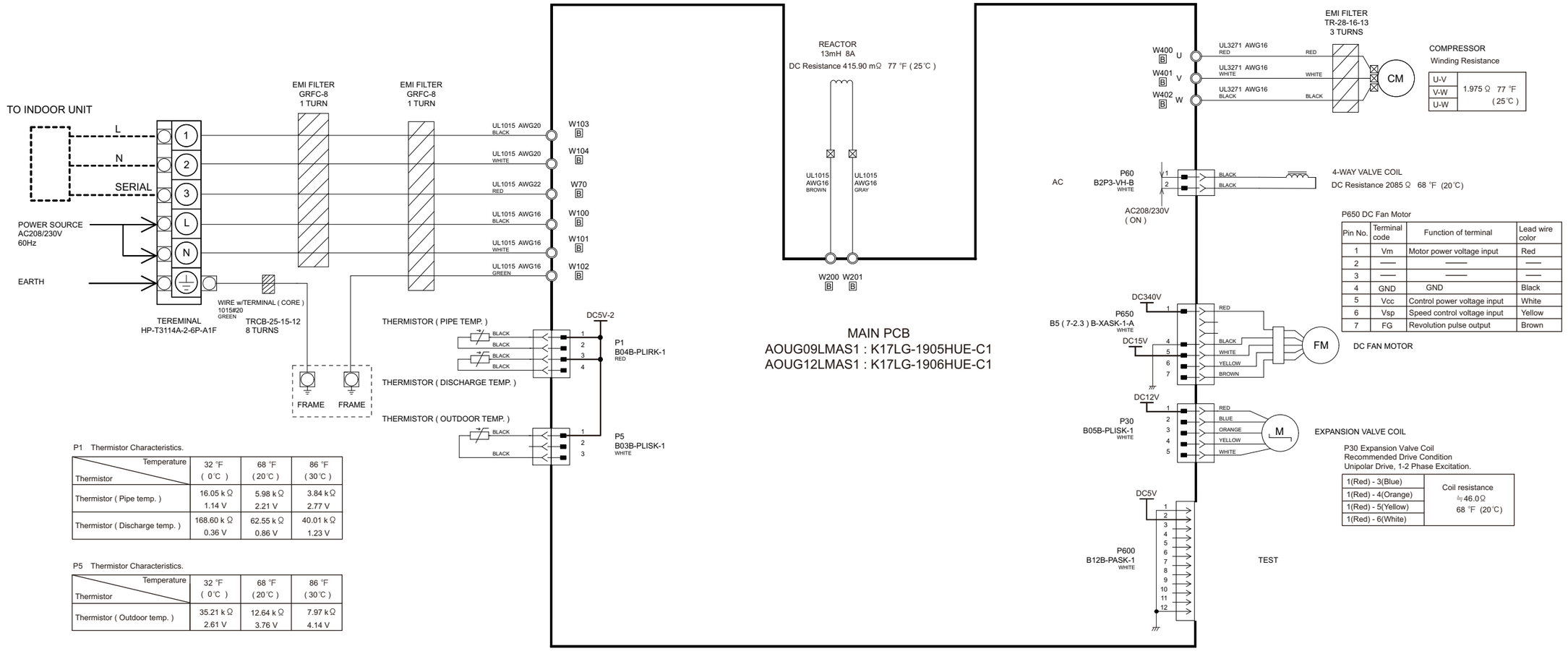

P650 DC Fan Motor

Pin No.	Terminal code	Function of terminal	Lead wire color
1	Vm	Motor power voltage input	Red
2	——	——	——
3	——	——	——
4	GND	GND	Black
5	Vcc	Control power voltage input	White
6	Vsp	Speed control voltage input	Yellow
7	FG	Revolution pulse output	Brown

P30 Expansion Valve Coil
Recommended Drive Condition
Unipolar Drive, 1-2 Phase Excitation.

1(Red) - 3(Blue)	Coil resistance ≒46.0Ω 68 ℉ (20℃)
1(Red) - 4(Orange)	
1(Red) - 5(Yellow)	
1(Red) - 6(White)	

P1 Thermistor Characteristics.

Thermistor \ Temperature	32 ℉ (0℃)	68 ℉ (20℃)	86 ℉ (30℃)
Thermistor (Pipe temp.)	16.05 k Ω 1.14 V	5.98 k Ω 2.21 V	3.84 k Ω 2.77 V
Thermistor (Discharge temp.)	168.60 k Ω 0.36 V	62.55 k Ω 0.86 V	40.01 k Ω 1.23 V

P5 Thermistor Characteristics.

Thermistor \ Temperature	32 ℉ (0℃)	68 ℉ (20℃)	86 ℉ (30℃)
Thermistor (Outdoor temp.)	35.21 k Ω 2.61 V	12.64 k Ω 3.76 V	7.97 k Ω 4.14 V

TECHNICAL DATA
AND PARTS LIST

3. TROUBLESHOOTING

CONTENTS

3. TROUBLESHOOTING

1. Error code 03-1

1-1. Error code table (Indoor unit and wired remote controller).....03-1

2. Troubleshooting with error code 03-2

2-1. E: 11. Serial communication error (Serial reverse transfer error) (Outdoor unit).....03-2

2-2. E: 11. Serial communication error (Serial forward transfer error) (Indoor unit) 03-4

2-3. E: 12. Wired remote controller communication error (Indoor unit) 03-6

2-4. E: 18. External communication error (Indoor unit) 03-7

2-5. E: 32. Indoor unit main PCB error (Indoor unit) 03-8

2-6. E: 35. MANUAL AUTO button error (Indoor unit).....03-9

2-7. E: 41. Room temperature sensor error (Indoor unit).....03-10

2-8. E: 42. Indoor unit heat exchanger sensor error (Indoor unit) 03-11

2-9. E: 51. Indoor unit fan motor error (Indoor unit) 03-12

2-10. E: 62. Outdoor unit main PCB error (Outdoor unit).....03-13

2-11. E: 64. PFC circuit error (Outdoor unit) 03-14

2-12. E: 71. Discharge thermistor error (Outdoor unit).....03-15

2-13. E: 73. Outdoor unit heat exchanger thermistor error (Outdoor unit).....03-16

2-14. E: 74. Outdoor temperature thermistor error (Outdoor unit).....03-17

2-15. E: 84. Current sensor error (Outdoor unit) 03-18

2-16. E: 94. Trip detection (Outdoor unit).....03-19

2-17. E: 95. Compressor motor control error (Outdoor unit) 03-20

2-18. E: 97. Outdoor unit fan motor error (Outdoor unit).....03-21

2-19. E: 99. 4-way valve error (Outdoor unit).....03-23

2-20. E: A1. Discharge temperature error (Outdoor unit).....03-25

3. Troubleshooting without error code.....03-27

3-1. Indoor unit—No power.....03-27

3-2. Outdoor unit—No power.....03-28

3-3. No operation (Power is on).....03-29

3-4. No cooling/No heating 03-30

3-5. Abnormal noise.....03-32

3-6. Water leaking.....03-33

4. Service parts information 03-34

4-1. Compressor.....03-34

4-2. Inverter compressor.....03-35

4-3. Outdoor unit Electronic Expansion Valve (EEV) 03-36

4-4. Indoor unit fan motor 03-38

4-5. Outdoor unit fan motor.....03-39

5. Thermistor resistance values.....03-40

5-1. Indoor unit 03-40

5-2. Outdoor unit.....03-41

1. Error code

1-1. Error code table (Indoor unit and wired remote controller)

The operation, timer, and economy indicators operate according to the error contents.
For confirmation of the error contents, refer the flashing pattern as follows.

Error contents	Indoor unit display			Wired remote controller display
	Operation [I] (Green)	Timer [⏲] (Orange)	Economy [🌷] (Green)	
E: 11. Serial communication error (Serial reverse transfer error) (Outdoor unit)	1 times	1 times	Continuous	11
E: 11. Serial communication error (Serial forward transfer error) (Indoor unit)	1 times	1 times	Continuous	11
E: 12. Wired remote controller communication error (Indoor unit)	1 times	2 times	Continuous	12
E: 18. External communication error (Indoor unit)	1 times	8 times	Continuous	18
E: 32. Indoor unit main PCB error (Indoor unit)	3 times	2 times	Continuous	32
E: 35. MANUAL AUTO button error (Indoor unit)	3 times	5 times	Continuous	35
E: 41. Room temperature sensor error (Indoor unit)	4 times	1 times	Continuous	41
E: 42. Indoor unit heat exchanger sensor error (Indoor unit)	4 times	2 times	Continuous	42
E: 51. Indoor unit fan motor error (Indoor unit)	5 times	1 times	Continuous	51
E: 62. Outdoor unit main PCB error (Outdoor unit)	6 times	2 times	Continuous	62
E: 64. PFC circuit error (Outdoor unit)	6 times	4 times	Continuous	64
E: 71. Discharge thermistor error (Outdoor unit)	7 times	1 times	Continuous	71
E: 73. Outdoor unit heat exchanger thermistor error (Outdoor unit)	7 times	3 times	Continuous	73
E: 74. Outdoor temperature thermistor error (Outdoor unit)	7 times	4 times	Continuous	74
E: 84. Current sensor error (Outdoor unit)	8 times	4 times	Continuous	84
E: 94. Trip detection (Outdoor unit)	9 times	4 times	Continuous	94
E: 95. Compressor motor control error (Outdoor unit)	9 times	5 times	Continuous	95
E: 97. Outdoor unit fan motor error (Outdoor unit)	9 times	7 times	Continuous	97
E: 99. 4-way valve error (Outdoor unit)	9 times	9 times	Continuous	99
E: A1. Discharge temperature error (Outdoor unit)	10 times	1 times	Continuous	A1

TROUBLESHOOTING

2. Troubleshooting with error code

2-1. E: 11. Serial communication error (Serial reverse transfer error) (Outdoor unit)

Indicator	Indoor unit	Operation indicator	1 time flash
		Timer indicator	1 time flash
		Economy indicator	Continuous flash
		Error code	E: 11
Detective actuator	Outdoor unit	Main PCB	When the indoor unit cannot receive the serial signal from outdoor unit more than 2 minutes after power on, or the indoor unit cannot receive the serial signal more than 15 seconds during normal operation.
		Fan motor	
Forecast of cause			Connection failure
			External cause
			Main PCB failure
			Outdoor unit fan motor failure

Check point 1. Reset the power and operate

Does error indication show again?
→ If no, go to "Check point 1-2".

↓

Check point 2. Check connection

Check any loose or removed connection line of indoor unit and outdoor unit.
Check connection condition is control unit. (If there is loose connector, open cable or mis-wiring.)
→ If there is an abnormal condition, correct it by referring to the installation manual or the “DESIGN & TECHNICAL MANUAL”.

↓

Check point 3. Check the voltage of power supply

Check the voltage of power supply
Check if AC 187 V (AC 208 V -10%) to AC 253 V (AC 230 V +10%) appears at outdoor unit terminal L1 - L2.

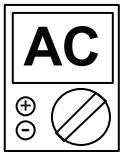

↓

Check point 4. Check serial signal (Reverse transfer signal)
Check serial signal (Reverse transfer signal)

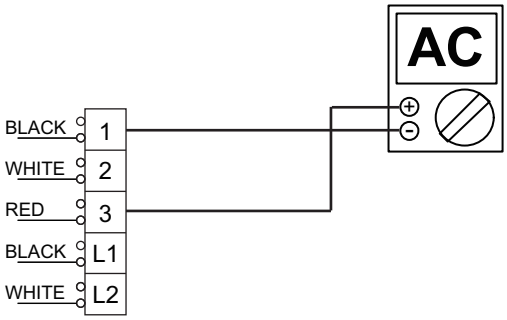

- Check if indicated value swings between AC 90 V and AC 270 V at the outdoor unit terminal 1—3.
- If it is abnormal, check the parts below.
  - Outdoor unit fan motor in "Service parts information" on page 03-34
- If outdoor fan motor is abnormal, replace outdoor unit fan motor and main PCB.
- If the checked parts are normal, replace the main PCB.

↓

End

Check point 1-2. Check external cause such as noise
• Check the complete insulation of the grounding. • Check if there is any equipment that causes harmonic wave near the power cable (Neon light bulb or any electronic equipment which causes harmonic wave).

↓

End

2-2. E: 11. Serial communication error (Serial forward transfer error) (Indoor unit)

Indicator	Indoor unit	Operation indicator	1 time flash
		Timer indicator	1 time flash
		Economy indicator	Continuous flash
		Error code	E: 11
Detective actuator	Indoor unit	Main PCB	When the outdoor unit cannot receive the serial signal from indoor unit more than 10 seconds.
		Fan motor	
Forecast of cause			Connection failure
			External cause
			Main PCB failure
			Indoor unit fan motor failure

Check point 1. Reset the power and operate
Does error indication show again? → If no, go to "Check point 1-2".

↓

Check point 2. Check connection
Check any loose or removed connection line of indoor unit and outdoor unit. Check connection condition is control unit. (If there is loose connector, open cable or mis-wiring.) → If there is an abnormal condition, correct it by referring to the installation manual or the “DESIGN & TECHNICAL MANUAL”.

↓

Check point 3. Check the voltage of power supply
Check the voltage of power supply Check if AC 187 V (AC 208 V -10%) to AC 253 V (AC 230 V +10%) appears at outdoor unit terminal L—N. 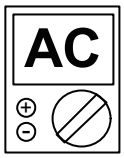

↓

Check point 4. Check serial signal (reverse transfer signal)
Check serial signal (Forward transfer signal)

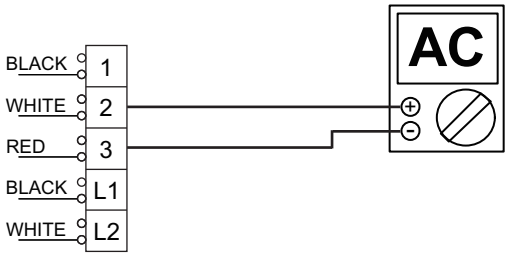

- Check if indicated value swings between AC 30 V and AC 130 V at outdoor unit terminal 2—3.
- If it is abnormal, replace main PCB.
- If it is abnormal, check indoor unit fan motor. (Indoor unit fan motor in "Service parts information" on page 03-34)
- If indoor unit fan motor is abnormal, replace indoor unit fan motor and main PCB.

↓

End

Check point 1-2. Check external cause such as noise
• Check the complete insulation of the grounding. • Check if there is any equipment that causes harmonic wave near the power cable (Neon light bulb or any electronic equipment which causes harmonic wave).

↓

End

2-3. E: 12. Wired remote controller communication error (Indoor unit)

Indicator	Indoor unit	Operation indicator	1 time flash
		Timer indicator	2 time flash
		Economy indicator	Continuous flash
		Error code	E: 12
Detective actuator	Indoor unit	Main PCB	When the indoor unit cannot receive the signal from Wired remote controller more than 1 minute during normal operation.
	Wired remote control		
Forecast of cause			Terminal connection abnormal
			Wired remote control failure
			Main PCB failure

Check point 1. Check the connection of terminal

After turning off the power, check & correct the followings.

- Check the connection of terminal between remote controller and indoor unit, and check if there is a disconnection of the cable.

↓

Check point 2. Check connection

Check voltage at CN305 (terminal 1—3) of UTY-XCBXZ1 (Communication kit). (Power supply to the remote controller)

Upon correcting the removed connector or mis-wiring, reset the power.

- If it is DC 13 V, remote controller is failure. (Main PCB is normal)
  - Replace Remote Control
- If it is DC 0 V, main PCB is failure. (Check remote controller once again)
  - Replace main PCB

↓

End

2-4. E: 18. External communication error (Indoor unit)

Indicator	Indoor unit	Operation indicator	1 time flash
		Timer indicator	8 time flash
		Economy indicator	Continuous flash
		Error code	E: 18
Detective actuator	Indoor unit	External communication error	After receiving a signal from the external input and output PCB, the same signal has not been received for 15 seconds.
Forecast of cause			Connection failure
			External input and output PCB failure
			Main PCB

Check point 1. Check the connection
• Check any loose or removed connection betw een the main PCB to the external input and output PCB. -> If there is an abnormal condition, correct it by refer to the installation manual or the “DESIGN & TECHNICAL MANUAL”. • Check the connection condition on the external input and output PCB and the main PCB (If there is loose connector, open cable or mis-wiring.)

↓

Check point 2. Replace the external input and output PCB
If check point 1 do not improve the symptom, change external input and output PCB

↓

Check point 3. Replace main PCB
If check point 2 do not improve the symptom, change main PCB

↓

End

2-5. E: 32. Indoor unit main PCB error (Indoor unit)

Indicator	Indoor unit	Operation indicator	3 time flash
		Timer indicator	2 time flash
		Economy indicator	Continuous flash
		Error code	E: 32
Detective actuator	Indoor unit	main PCB	When power is on and there is some below case. 1. When model information of EEPROM is incorrect. 2. When the access to EEPROM failed.
Forecast of cause			External cause
			Defective connection of electric components
			Main PCB failure

Check point 1. Reset power supply and operate
Does error indication show again? → If no, go to "Check point 1-2".

↓

Check point 2. Check Indoor unit electric components
• Check all connectors. (loose connector or incorrect wiring) • Check any shortage or corrosion on PCB.

↓

Check point 3. Replace main PCB
Change main PCB.

↓

End

Check point 1-2. Check external cause such as noise
• Check if the ground connection is proper. • Check if there is any equipment that causes harmonic wave near the power cable (Neon light bulb or any electronic equipment which causes harmonic wave).

↓

End

NOTE: EEPROM

EEPROM (Electronically Erasable and Programmable Read Only Memory) is a non-volatile memory which keeps memorized information even if the power is turned off. It can change the contents electronically. To change the contents, it uses higher voltage than normal, and it cannot change a partial contents. (Rewriting shall be done upon erasing the all contents.) There is a limit in a number of rewriting.

2-6. E: 35. MANUAL AUTO button error (Indoor unit)

Indicator	Indoor unit	Operation indicator	3 time flash
		Timer indicator	5 time flash
		Economy indicator	Continuous flash
		Error code	E: 35
Detective actuator	Indoor unit controller PCB		When the MANUAL AUTO button becomes on for consecutive 30 or more seconds.
	Indicator PCB		
	Manual auto switch		
Forecast of cause			MANUAL AUTO button failure
			Controller PCB and indicator PCB failure

Check point 1. Check the MANUAL AUTO button	
• Check if MANUAL AUTO button is kept pressed. • Check On/Off switching operation by using a meter. 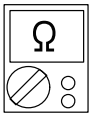	If MANUAL AUTO button is disabled (on/off switching), replace it.

↓

Check point 2. Replace main PCB and indicator PCB
If Check Point 1 does not improve the symptom, change main PCB and indicator PCB.

↓

End

2-7. E: 41. Room temperature sensor error (Indoor unit)

Indicator	Indoor unit	Operation indicator	4 time flash
		Timer indicator	1 time flash
		Economy indicator	Continuous flash
		Error code	E: 41
Detective actuator	Indoor unit main PCB		Room temperature thermistor is open or short is detected always.
	Room temperature thermistor		
Forecast of cause			Connector failure
			Thermistor failure
			Main PCB failure

TROUBLESHOOTING

Check point 1. Check connection of connector

- Check if connector is loose or removed.
- Check erroneous connection.
- Check if thermistor cable is open

-> Reset power when reinstalling due to removed connector or incorrect wiring.

↓

Check point 2. Remove connector and check thermistor resistance value

- For the room thermistor resistance value, refer to "Thermistor resistance values" on page 03-40.
- If thermistor is either open or shorted, replace it and reset the power.

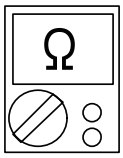

↓

Check point 3. Check voltage of main PCB

Make sure circuit diagram of each indoor unit and check terminal voltage at thermistor (DC 5.0 V).

NOTE: For details of thermistor connector, refer to "Wiring diagrams" in Chapter 2. TECHNICAL DATA AND PARTS LIST on page 02-14.

If the voltage does not appear, replace main PCB.

↓

End

2-8. E: 42. Indoor unit heat exchanger sensor error (Indoor unit)

Indicator	Indoor unit	Operation indicator	4 time flash
		Timer indicator	2 time flash
		Economy indicator	Continuous flash
		Error code	E: 42
Detective actuator	Indoor unit main PCB		When heat exchanger temperature thermistor open or short circuit is detected.
	Heat exchanger temperature thermistor		
Forecast of cause			Connector connection failure
			Thermistor failure
			Main PCB failure

Check point 1. Check connection of connector

- Check if connector is loose or removed.
- Check erroneous connection.
- Check if thermistor cable is open

-> Reset power when reinstalling due to removed connector or incorrect wiring.

↓

Check point 2. Remove connector and check thermistor resistance value

- For the room thermistor resistance value, refer to "Thermistor resistance values" on page 03-40.
- If thermistor is either open or shorted, replace it and reset the power.

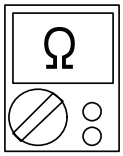

↓

Check point 3. Check voltage of main PCB

Make sure circuit diagram of each indoor unit and check terminal voltage at thermistor (DC 5.0 V).

NOTE: For details of thermistor connector, refer to "Wiring diagrams" in Chapter 2. TECHNICAL DATA AND PARTS LIST on page 02-14.

If the voltage does not appear, replace main PCB.

↓

End

2-9. E: 51. Indoor unit fan motor error (Indoor unit)

Indicator	Indoor unit	Operation indicator	5 time flash
		Timer indicator	1 time flash
		Economy indicator	Continuous flash
		Error code	E: 51
Detective actuator	Indoor unit	main PCB	When the condition that actual frequency of indoor fan is below 1/3 of target frequency is continued more than 56 seconds.
		Fan motor	
Forecast of cause			Fan rotation failure
			Fan motor winding open
			Motor protection by surrounding temperature rise
			Control PCB failure
			Indoor unit fan motor failure

Check point 1. Check rotation of fan
Rotate the fan by hand when operation is off. (Check if fan is caught, dropped off or locked motor) → If fan or bearing is abnormal, replace it.

↓

Check point 2. Check ambient temp. around motor
Check excessively high temperature around the motor. (If there is any surrounding equipment that causes heat) → Upon the temperature coming down, restart operation.

↓

Check point 3. Check indoor unit fan motor
Check Indoor unit fan motor. (Refer to indoor unit fan motor in "Service parts information" on page 03-34.) → If Indoor unit fan motor is abnormal, replace Indoor unit fan motor.

↓

Check point 4. Replace main PCB
If Check Point 1 to 3 do not improve the symptom, replace main PCB.

↓

End

2-10. E: 62. Outdoor unit main PCB error (Outdoor unit)

Indicator	Indoor unit	Operation indicator	6 time flash
		Timer indicator	2 time flash
		Economy indicator	Continuous flash
		Error code	E: 62
Detective actuator	Outdoor unit	Main PCB	Access to EEPROM failed due to some cause after outdoor unit started.
Forecast of cause			External cause (Noise, temporary open, voltage drop)
			Main PCB failure

Check point 1. Reset power supply and operate
Does error indication show again?

If no, go to "Check point 1-2".

↓

Check point 2. Replace main PCB
Change main PCB.

↓

End

Check point 1-2. Check external cause
• Check if temporary voltage drop was not generated. • Check if momentary open was not generated. • Check if ground is connection correctly or there are no related cables near the power line.

↓

End

2-11. E: 64. PFC circuit error (Outdoor unit)

Indicator	Indoor unit	Operation indicator	6 time flash
		Timer indicator	4 time flash
		Economy indicator	Continuous flash
		Error code	E: 64
Detective actuator	Outdoor unit	Main PCB	• When inverter input DC voltage is higher than 415 V for over 3 seconds, the compressor stops. • If the same operation is repeated 5 times, the compressor stops permanently.
Forecast of cause			External cause
			Connector connection failure
			Main PCB failure

Check point 1. Check external cause at indoor and outdoor (Voltage drop or Noise)
• Instant drop: Check if there is a large load electric apparatus in the same circuit. • Momentary power failure: Check if there is a defective contact or leak current in the power supply circuit. • Noise: Check if there is any equipment causing harmonic wave near electric line. (Neon bulb or electric equipment that may cause harmonic wave) Check the complete insulation of grounding.

↓

Check point 2. Check connection of Connector
• Check if connector is removed. • Check erroneous connection. • Check if cable is open. → Upon correcting the removed connector or mis-wiring, reset the power.

↓

Check point 3. Replace main PCB
If check point 1 to 2 do not improve the symptom, change main PCB.

↓

End

2-12. E: 71. Discharge thermistor error (Outdoor unit)

Indicator	Indoor unit	Operation indicator	7 time flash
		Timer indicator	1 time flash
		Economy indicator	Continuous flash
		Error code	E: 71
Detective actuator	Outdoor unit main PCB		When discharge pipe temperature thermistor open or short circuit is detected at power on or while running the compressor
	Discharge pipe temperature thermistor		
Forecast of cause			Connector failure
			Thermistor failure
			Main PCB failure

Check point 1. Check connection of connector

- Check if connector is loose or removed.
- Check erroneous connection.
- Check if thermistor cable is open

→ Reset power when reinstalling due to removed connector or incorrect wiring.

↓

Check point 2. Remove connector and check thermistor resistance value

- For the discharge temperature thermistor resistance value, refer to "Thermistor resistance values" on page 03-40.
- If thermistor is either open or shorted, replace it and reset the power.

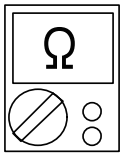

↓

Check point 3. Check voltage of main PCB

Make sure circuit diagram of outdoor unit and check terminal voltage at thermistor (DC 5.0 V).

NOTE: For details of thermistor connector, refer to "Wiring diagrams" in Chapter 2. TECHNICAL DATA AND PARTS LIST on page 02-14.

If the voltage does not appear, replace main PCB.

↓

End

2-13. E: 73. Outdoor unit heat exchanger thermistor error (Outdoor unit)

Indicator	Indoor unit	Operation indicator	7 time flash
		Timer indicator	3 time flash
		Economy indicator	Continuous flash
		Error code	E: 73
Detective actuator	Outdoor unit main PCB		When heat exchanger temperature thermistor open or short circuit is detected at power on or while running the compressor
	Heat exchanger temperature thermistor		
Forecast of cause			Connector failure
			Thermistor failure
			Main PCB failure

Check point 1. Check connection of connector

- Check if connector is loose or removed.
- Check erroneous connection.
- Check if thermistor cable is open

→ Reset power when reinstalling due to removed connector or incorrect wiring.

↓

Check point 2. Remove connector and check thermistor resistance value

- For the outdoor unit heat exchanger thermistor resistance value, refer to "Thermistor resistance values" on page 03-40.
- If thermistor is either open or shorted, replace it and reset the power.

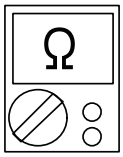

↓

Check point 3. Check voltage of main PCB

Make sure circuit diagram of outdoor unit and check terminal voltage at thermistor (DC 5.0 V).

NOTE: For details of thermistor connector, refer to "Wiring diagrams" in Chapter 2. TECHNICAL DATA AND PARTS LIST on page 02-14.

If the voltage does not appear, replace main PCB.

↓

End

2-14. E: 74. Outdoor temperature thermistor error (Outdoor unit)

Indicator	Indoor unit	Operation indicator	7 time flash
		Timer indicator	4 time flash
		Economy indicator	Continuous flash
		Error code	E: 74
Detective actuator	Outdoor unit main PCB		When outdoor temperature thermistor open or short circuit is detected at power on or while running the compressor
	Outdoor temperature thermistor		
Forecast of cause			Connector failure
			Thermistor failure
			Main PCB failure

TROUBLESHOOTING

Check point 1. Check connection of connector

- Check if connector is loose or removed.
- Check erroneous connection.
- Check if thermistor cable is open

-> Reset power when reinstalling due to removed connector or incorrect wiring.

↓

Check point 2. Remove connector and check thermistor resistance value

- For the outdoor temperature thermistor resistance value, refer to "Thermistor resistance values" on page 03-40.
- If thermistor is either open or shorted, replace it and reset the power.

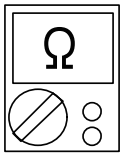

↓

Check point 3. Check voltage of main PCB

Make sure circuit diagram of outdoor unit and check terminal voltage at thermistor (DC 5.0 V).

NOTE: For details of thermistor connector, refer to "Wiring diagrams" in Chapter 2. TECHNICAL DATA AND PARTS LIST on page 02-14.

If the voltage does not appear, replace main PCB.

↓

End

2-15. E: 84. Current sensor error (Outdoor unit)

Indicator	Indoor unit	Operation indicator	8 time flash
		Timer indicator	4 time flash
		Economy indicator	Continuous flash
		Error code	E: 84
Detective actuator	Outdoor unit	main PCB	When input current sensor has detected 0 A, while inverter compressor is operating at higher than 56 rps, after 1 minute upon starting the compressor. (Except during the defrost operation)
Forecast of cause			Defective connection of electric components
			External cause
			Main PCB failure

Check point 1. Reset power supply and operate

Does error indication show again?

If no, go to "Check point 1-2".

↓

Check point 2. Check connections of outdoor unit electrical components

- Check if the terminal connection is loose.
- Check if connector is removed.
- Check erroneous connection.
- Check if cable is open.

Upon correcting the removed connector or mis-wiring, reset the power.

↓

Check point 3. Replace main PCB

If Check point 1, 2 do not improve the symptom, change main PCB.

↓

End

Check point 1-2. Check external cause at Indoor and Outdoor (Voltage drop or Noise)

- Instant drop: Check if there is a large load electric apparatus in the same circuit.
- Momentary power failure: Check if there is a defective contact or leak current in the power supply circuit.
- Noise: Check if there is any equipment causing harmonic wave near electric line. (Neon bulb or electric equipment that may cause harmonic wave)
  Check the complete insulation of grounding.

↓

End

2-16. E: 94. Trip detection (Outdoor unit)

Indicator	Indoor unit	Operation indicator	9 time flash
		Timer indicator	4 time flash
		Economy indicator	Continuous flash
		Error code	E: 94
Detective actuator	Outdoor unit	Main PCB	Protection stop by over-current generation after inverter compressor start processing completed generated consecutively 10 times. **NOTE:** The number of generations is reset when the compressor starts up.
		Compressor	
Forecast of cause			Outdoor unit fan operation defective, foreign matter on heat-exchanger, excessive rise of ambient temperature
			Main PCB failure
			Inverter compressor failure (lock, winding short)

Check point 1. Check the outdoor unit fan operation, heat-exchanger, ambient temperature
• No obstructions in air passages? • Heat exchange fins clogged • Outdoor unit fan motor check • Ambient temperature not raised by the effect of other heat sources? • Discharged air not sucked in?

↓

Check point 2. Replace main PCB
If Check point 1 do not improve the symptom, change main PCB.

↓

Check point 3. Replace compressor
If Check point 2 do not improve the symptom, change compressor.

↓

End

2-17. E: 95. Compressor motor control error (Outdoor unit)

Indicator	Indoor unit	Operation indicator	9 time flash
		Timer indicator	5 time flash
		Economy indicator	Continuous flash
		Error code	E: 95
Detective actuator	Outdoor unit	Main PCB	1. When running the compressor, if the detected rotor location is out of phase with actual rotor location more than 90°, the compressor stops. 2. After the compressor restarts, if the same operation is repeated within 40 seconds, the compressor stops again. 3. If 1. and 2. repeats 5 times, the compressor stops permanently.
		Compressor	
Forecast of cause			Defective connection of electric components
			Main PCB failure
			Compressor failure

Check point 1. Check Noise from Compressor
Turn on Power and check operation noise. → If an abnormal noise show, replace compressor.

↓

Check point 2. Check connection of around the compressor components
For compressor terminal, main PCB • Check if connector is removed. • Check erroneous connection. • Check if cable is open. (Refer to inverter compressor in "Service parts information" on page 03-34.) → Upon correcting the removed connector or mis-wiring, reset the power.

↓

Check point 3. Replace main PCB
If Check point 1, 2 do not improve the symptom, change main PCB.

↓

Check point 4. Replace compressor
If Check point 3 do not improve the symptom, change compressor.

↓

End

2-18. E: 97. Outdoor unit fan motor error (Outdoor unit)

Indicator	Indoor unit	Operation indicator	9 time flash
		Timer indicator	7 time flash
		Economy indicator	Continuous flash
		Error code	E: 97
Detective actuator	Outdoor unit	Main PCB	1. When outdoor fan rotation speed is less than 100 rpm in 20 seconds after fan motor starts, fan motor stops. 2. After fan motor restarts, if the same operation within 60 seconds is repeated 3 times in a row, compressor and fan motor stops. 3. If 1. and 2. repeats 5 times in a row, compressor and fan motor stops permanently.
		Fan motor	
Forecast of cause			Fan rotation failure
			Motor protection by surrounding temperature rise
			Main PCB failure
			Outdoor unit fan motor

Check point 1. Check rotation of fan
Rotate the fan by hand when operation is off. (Check if fan is caught, dropped off or locked motor) → If fan or bearing is abnormal, replace it.

↓

Check point 2. Check ambient temp. around motor
Check excessively high temperature around the motor. (If there is any surrounding equipment that causes heat) Upon the temperature coming down, restart operation.

↓

Check point 3. Check outdoor unit fan motor
Check outdoor unit fan motor. (Refer to outdoor unit fan motor in "Service parts information" on page 03-34.) → If outdoor unit fan motor is abnormal, replace outdoor unit fan motor and main PCB.

↓

TROUBLESHOOTING

Check point 4. Check output voltage of main PCB

Check outdoor unit circuit diagram and the voltage. (Measure at main PCB side connector)

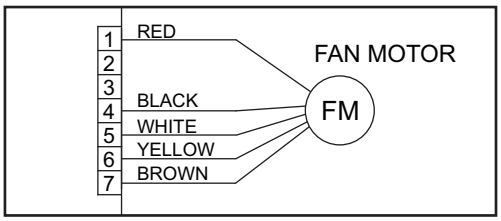

NOTE: For details of wiring diagram, refer to "Wiring diagrams" in Chapter 2. TECHNICAL DATA AND PARTS LIST on page 02-14.

Read wire	DC voltage
Red—Black	280 V ±10%
White—Black	15 ± 1.5 V

-> If the voltage is not correct, replace Main PCB.

↓

End

2-19. E: 99. 4-way valve error (Outdoor unit)

Indicator	Indoor unit	Operation indicator	9 time flash
		Timer indicator	9 time flash
		Economy indicator	Continuous flash
		Error code	E: 99
Detective actuator	Indoor unit	main PCB	When the indoor heat exchanger temperature is compared with the room temperature, and either following condition is detected continuously two times, the compressor stops. Indoor heat exchanger temp. - Room temp. > 20 °F (10 °C) (Cooling or Dry operation) Indoor heat exchanger temp. - Room temp. < -20 °F (-10 °C) (Heating operation) If the same operation is repeated 5 times, the compressor stops permanently.
	Heat exchanger temperature thermistor		
	Room temperature thermistor		
	4-way valve		
Forecast of cause			Connector connection failure
			Thermistor failure
			Coil failure
			4-way valve failure
			Main PCB failure

Check point 1. Check connection of connector

- Check if connector is removed.
- Check erroneous connection.
- Check if thermistor cable is open.

→ Upon correcting the removed connector or mis-wiring, reset the power.

↓

Check point 2. Check each thermistor

- Isn’t it fallen off the holder?
- Is there a cable pinched?

Check characteristics of room thermistor and indoor unit heat exchanger thermistor.
For the thermistor resistance value, refer to "Thermistor resistance values" on page 03-40.
→ If defective, replace the thermistor.

↓

Check point 3. Check the solenoid coil and 4-way valve
• **Solenoid coil** Remove CN501 from PCB and check the resistance value of coil. Resistance value is 1.22 kΩ — 1.49 kΩ (at 68 °F (20 °C)). → If it is open or abnormal resistance value, replace solenoid coil. • **4-way valve** Check each piping temperature, and the location of the valve by the temperature difference. If the value location is not proper, replace 4-way valve.

↓

Check point 4. Check the voltage of 4-way valve
Check the voltage CN501 of Main PCB. → Check if AC 187 V (AC 208 V -10%) to AC 253 V (AC 230 V +10%) appears at CN501 of Main PCB. • **Heating operation** → If it is not voltage, Replace Main PCB. • **Cooling operation** → If it is voltage, Replace Main PCB.

↓

Check point 5. Replace main PCB
If Check Point 1 to 4 do not improve the symptom, replace main PCB.

↓

End

2-20. E: A1. Discharge temperature error (Outdoor unit)

Indicator	Indoor unit	Operation indicator	10 time flash
		Timer indicator	1 time flash
		Economy indicator	Continuous flash
		Error code	E: A1
Detective actuator	Outdoor unit main PCB		Protection stop by discharge temperature ≥ 230 °F (110 °C) during compressor operation generated 2 times within 24 hours.
	Discharge temperature thermistor		
Forecast of cause			3-way valve not opened
			EEV defective, strainer clogged
			Outdoor unit operation failure, foreign matter on heat exchanger
			Discharge temperature thermistor failure
			Insufficient refrigerant
			Main PCB failure

TROUBLESHOOTING

TROUBLESHOOTING

Check point 1. Check if 3-way valve is open

If the 3-way valve is closed, open the 3-way valve and check operation.

NOTE: For cooling operation, check gas side of the 3-way valve.
For heating operation, check liquid side of the 3-way valve.

↓

Check point 2. Check the electronic expansion valve (EEV) and strainer

- Check if EEV open.
  Refer to outdoor unit Electronic Expansion Valve (EEV) in "Service parts information" on page 03-34.
- Check the strainer clogging.

↓

Check point 3. Check the outdoor unit fan and heat exchanger

- Check for foreign object at heat exchanger
- Check if fan can be rotated by hand.
- Check the motor. (Refer to outdoor unit fan motor in "Service parts information" on page 03-34.)

↓

Check point 4. Check the discharge thermistor

The discharge temperature thermistor characteristics check. (Check by disconnecting thermistor from PCB.)

NOTE: For the characteristics of the thermistor, refer to "Thermistor resistance values" on page 03-40.

↓

Check point 5. Check the refrigerant amount
Check the refrigerant leakage.

↓

Check point 6. Replace main PCB
If check point 1 to 5 do not improve the symptom, replace the main PCB.

↓

End

TROUBLESHOOTING

3. Troubleshooting without error code

3-1. Indoor unit—No power

Forecast of cause	Power supply failure
	External cause
	Electrical components defective

TROUBLESHOOTING

Check point 1. Check installation condition

- Isn't the breaker down?
- Check loose or removed connection cable.

-> If abnormal condition is found, correct it by referring to the installation manual or the "DESIGN & TECHNICAL MANUAL".

↓

Check point 2. Check external cause at indoor and outdoor (voltage drop or noise)

- Instant drop: Check if there is a large load electric apparatus in the same circuit.
- Momentary power failure: Check if there is a defective contact or leak current in the power supply circuit.
- Noise: Check if there is any equipment causing harmonic wave near electric line. (Neon bulb or electric equipment that may cause harmonic wave)
  Check the complete insulation of grounding.

↓

Check point 3. Check electrical components

Check the voltage of power supply.
Check if AC 187 to 253 V appears at outdoor unit terminal L—N.
-> If no, go to "Check point 1" and "Check point 2".

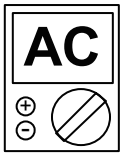

↓

- Check fuse in filter PCB.
  If fuse is open, check if the wiring between terminal and filter PCB is loose, and replace fuse.
- Check varistor in filter PCB.
  If varistor is defective, there is a possibility of an abnormal power supply.
  Check the correct power supply and replace varistor.
  Upon checking the normal power supply, replace varistor.

↓

End

3-2. Outdoor unit—No power

Forecast of cause	Power supply failure
	External cause
	Electrical components defective

TROUBLESHOOTING

Check point 1. Check installation condition

- Isn't the breaker down?
- Check loose or removed connection cable.

→ If abnormal condition is found, correct it by referring to the installation manual or the "DESIGN & TECHNICAL MANUAL".

↓

Check point 2. Check external cause at indoor and outdoor (voltage drop or noise)

- Instant drop: Check if there is a large load electric apparatus in the same circuit.
- Momentary power failure: Check if there is a defective contact or leak current in the power supply circuit.
- Noise: Check if there is any equipment causing harmonic wave near electric line. (Neon bulb or electric equipment that may cause harmonic wave)
  Check the complete insulation of grounding.

↓

Check point 3. Check electrical components

Check the voltage of power supply.
Check if AC 187 to 253 V appears at outdoor unit terminal L1 - L2
→ If no, go to "Check point 1" and "Check point 2".

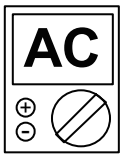

↓

- Check fuse in main PCB.
  If fuse is open, check if the wiring between terminal and main PCB is loose, and replace fuse.
- Check varistor in main PCB.
  If varistor is defective, there is a possibility of an abnormal power supply. Check the correct power supply and replace varistor.
  → Upon checking the normal power supply, replace varistor.

↓

Check point 4. Replace main PCB

If check point 1 to 3 do not improve the symptom, change main PCB.

↓

End

3-3. No operation (Power is on)

Forecast of cause	Setting/ Connection failure
	External cause
	Electrical components defective

TROUBLESHOOTING

Check point 1. Check indoor and outdoor installation condition

- Indoor unit:
  - Check incorrect wiring between indoor unit and remote controller.
  - Check if there is an open cable connection.
- Are these indoor unit, outdoor unit, and remote controller suitable model numbers to connect?

-> If there is some abnormal condition, correct it by referring to the installation manual and “DESIGN & TECHNICAL MANUAL”.

↓

Turn off the power and check correct followings.

- Is there loose or removed communication line of indoor unit and outdoor unit?

↓

Check point 2. Check external cause at indoor and outdoor (Voltage drop or Noise)

- Instant drop: Check if there is a large load electric apparatus in the same circuit.
- Momentary power failure: Check if there is a defective contact or leak current in the power supply circuit.
- Noise: Check if there is any equipment causing harmonic wave near electric line. (Neon bulb or electric equipment that may cause harmonic wave)
  Check the complete insulation of grounding.

↓

Check point 3. Check wired remote controller and controller PCB

Check voltage at CN305 (terminal 1—3) of UTY-XCBXZ1(Communication kit).
(Power supply to remote controller)

- If it is DC 13 V, remote controller is failure. (The controller PCB is normal)
  -> Replace remote controller.
- If it is DC 0 V, controller PCB is failure. (Check the remote controller once again)
  -> Replace controller PCB.

↓

Check point 4. Replace main PCB

If check point 1 to 3 do not improve the symptom, change main PCB.

↓

End

3-4. No cooling/No heating

Forecast of cause	Indoor unit error
	Outdoor unit error
	Effect by surrounding environment
	Connection pipe/Connection wire failure
	Refrigeration cycle failure

TROUBLESHOOTING

Check point 1. Check Indoor unit

- Does Indoor unit fan run in the HIGH mode?
- Is air filter dirty?
- Is heat exchanger clogged?
- Check if energy save function is operated.

↓

Check point 2. Check outdoor unit operation

- Check if outdoor unit is operating.
- Check any objects that obstruct the air flow route.
- Check if heat exchanger is clogged.
- Is the valve open?

↓

Check point 3. Check site condition

- Is capacity of Indoor unit fitted to the room size?
- Any windows open or direct sunlight?

↓

Check point 4. Check Indoor/ Outdoor installation condition

- Check connection pipe (specified pipe length and pipe diameter?)
- Check any loose or removed communication line.

→ If there is an abnormal condition, correct it by referring to the installation manual or the “DESIGN & TECHNICAL MANUAL”.

↓

Check point 5. Check Refrigeration cycle

- Check if strainer is clogged (Refer to the figure below).
- Measure gas pressure, and if there is a leakage, correct it.
- Check the electronic expansion valve.
  Refer to outdoor unit Electronic Expansion Valve (EEV) in "Service parts information" on page 03-34.
- Check compressor.
  Refer to compressor in "Service parts information" on page 03-34.
  Refer to inverter compressor in "Service parts information" on page 03-34.

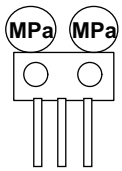

NOTE: When recharging the refrigerant, make sure to perform vacuuming, and recharge the specified amount.

↓

End

NOTES:

- Strainer normally does not have temperature difference between inlet and outlet as shown below.

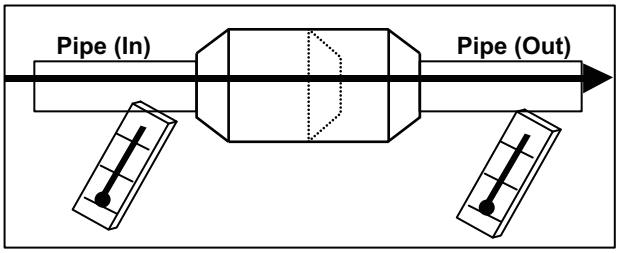

- If there is a difference like shown below, there is a possibility of inside clogged. In this case, replace the strainer.

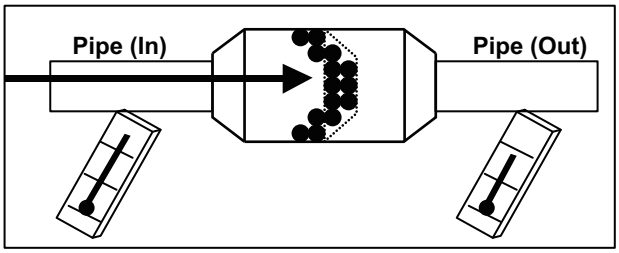

TROUBLESHOOTING

3-5. Abnormal noise

Forecast of cause	Abnormal installation (indoor unit/outdoor unit)
	Fan failure (indoor unit/outdoor unit)
	Compressor failure (outdoor)

Diagnosis method when abnormal noise is occurred

Abnormal noise is coming from Indoor unit.
(Check and correct followings)

↓

- Is main unit installed in stable condition?
- Is the installation of air suction grille and front panel normal?

↓

- Is fan broken or deformed?
- Is the screw of fan loose?
- Is there any object which obstruct the fan rotation?

↓

End

Abnormal noise is coming from Indoor unit.
(Check and correct followings)

↓

- Is main unit installed in stable condition?
- Is fan guard installed normally?

↓

- Is fan broken or deformed?
- Is the screw of fan loose?
- Is there any object which obstruct the fan rotation?

↓

Check if vibration noise by loose bolt or contact noise of piping is happening.

↓

Is compressor locked?

- Check Compressor
  Refer to compressor and inverter compressor in "Service parts information" on page 03-34.

↓

End

3-6. Water leaking

Forecast of cause	Erroneous installation
	Drain hose failure

Diagnosis method when water leak occurs

- Is main unit installed in stable condition?
- Is main unit broken or deformed at the time of transportation or maintenance?

↓

- Is drain hose connection loose?
- Is there a trap in drain hose?
- Is drain hose clogged?

↓

Is fan rotating?

↓

End

Diagnosis method when water is spitting out

Is the filter clogged?

↓

Check gas pressure and correct it if there was a gas leak.

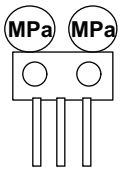

↓

End

TROUBLESHOOTING

4. Service parts information

4-1. Compressor

Diagnosis method of compressor (If outdoor unit LED displays error, refer to troubleshooting)

Does not start up

↓

Is there open or loose connection cable?

↓

Check main PCB, connection of compressor, and winding resistance.
(Refer to the next page)
→ If there is no failure, the defect of compressor is considered (Locked compressor due to clogged dirt or less oil)

↓

Replace compressor.

↓

End

Stops soon after starting up

↓

Is there open or loose connection cable?

↓

Is gas pipe valve open?
(Low pressure is too low)

↓

Check if refrigerant is leaking.

↓

Check if strainer is clogged.
(Refer to outdoor EEV in this chapter.)

↓

Check main PCB, connection of compressor and winding resistance. (Refer to the next page)
→ If there is no failure, the defect of compressor can be considered. (Compression part broken or valve defective.)

↓

Replace compressor.

↓

End

Abnormal noise

↓

Check if vibration noise by loose bolt or contact noise of piping is happening.

↓

Defective compressor can be considered.
(due to inside dirt clogging or broken component)

↓

Replace compressor.

↓

End

4-2. Inverter compressor

Check point 1. Check connection

- Check terminal connection of compressor (loose or incorrect wiring)

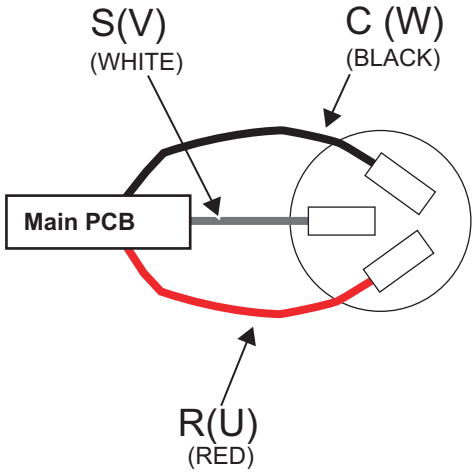

- Check terminal connection of main PCB (loose or incorrect wiring)

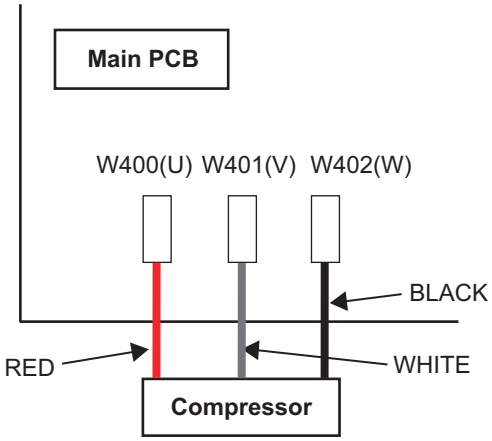

↓

Check point 2. Check winding resistance

Check winding resistance of each terminal.
Resistance value: 1.975 Ω ± 7% at 77 °F (25°C)

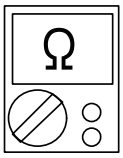

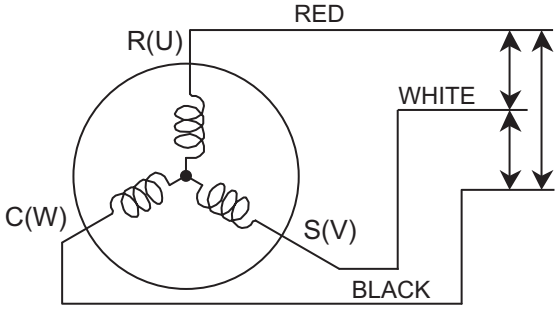

→ If the resistance value is 0 Ω or infinite, replace compressor.

↓

Check point 3. Replace inverter PCB

If check point 1 to 2 do not improve the symptom, replace main PCB.

4-3. Outdoor unit Electronic Expansion Valve (EEV)

Check point 1. Check connections

Check connection of connector. (Loose connector or open cable)

NOTE: For details of wiring diagram, refer to "Wiring diagrams" in Chapter 2. TECHNICAL DATA AND PARTS LIST on page 02-14.

Check point 2. Check coil of EEV

Remove connector, check each winding resistance of coil.

Read wire	Resistance value
1 (Red)—2 (Blue)	46 Ω ± 4 Ω at 68°F (20°C)
1 (Red)—3 (Orange)	
1 (Red)—4 (Yellow)	
1 (Red)—5 (White)	

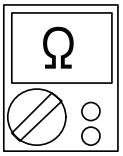

→ If Resistance value is abnormal, replace EEV.

Check point 3. Check Voltage from main PCB

Remove connector and check voltage (DC 12 V)
→ If it does not appear, replace main PCB.

Check point 4. Check noise at start up

Turn on the power and check the operation noise.
→ If an abnormal noise does not show, replace main PCB.

Check point 5. Check Opening and Closing Operation of Valve

When valve is closed, it has a temp. difference between inlet and outlet

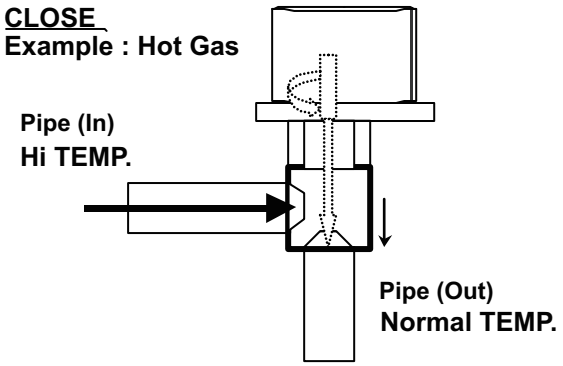

If it is open, it has no temp. difference between inlet and outlet

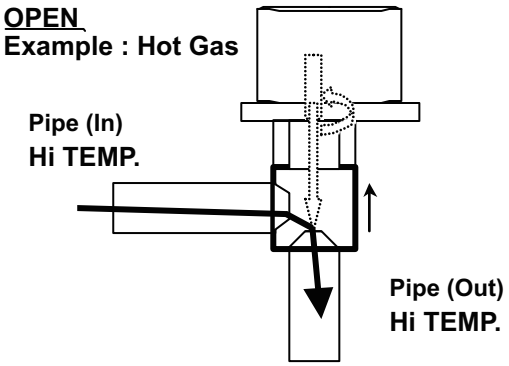

Check point 6. Check strainer
• Strainer normally does not have temperature difference between inlet and outlet as shown below.

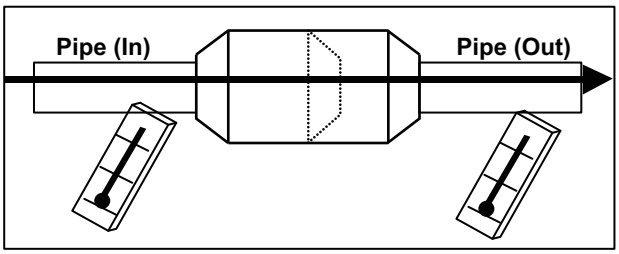

- If there is a difference like shown below, there is a possibility of inside clogged. In this case, replace the strainer.

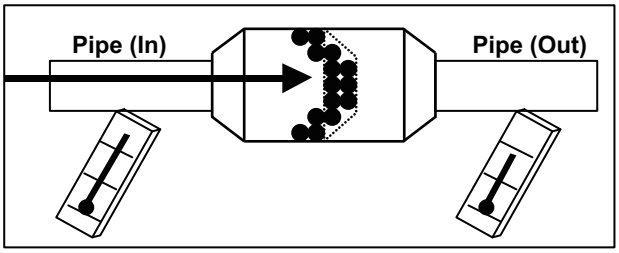

TROUBLESHOOTING

4-4. Indoor unit fan motor

Check point 1. Check rotation of fan
Rotate the fan by hand when operation is off. (Check if fan is caught, dropped off or locked motor) → If fan or bearing is abnormal, replace it.

Check point 2. Check resistance of indoor fan motor

Refer to below. Circuit-test “Vm” and “GND” terminal

NOTE: Vm: DC voltage, GND: Earth terminal

→ If they are short-circuited (below 300 kΩ), replace indoor fan motor and controller PCB.

Pin number (wire color)	Terminal function (symbol)
1 (Red)	DC voltage (Vm)
2	No function
3	No function
4 (Black)	Earth terminal (GND)
5 (White)	Control voltage (Vcc)
6 (Yellow)	Speed command (Vsp)
7 (Brown))	Feed back (FG)

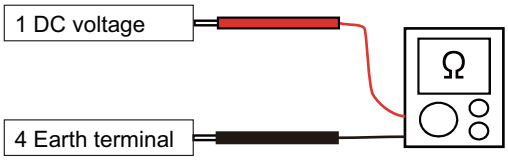

4-5. Outdoor unit fan motor

Check point 1. Check rotation of fan
Rotate the fan by hand when operation is off. (Check if fan is caught, dropped off or locked motor) → If fan or bearing is abnormal, replace it.

Check point 2. Check resistance of outdoor fan motor

Refer to below. Circuit-test “Vm” and “GND” terminal

NOTE: Vm: DC voltage, GND: Earth terminal

→ If they are short-circuited (below 300 kΩ), replace outdoor fan motor and controller PCB.

Pin number (wire color)	Terminal function (symbol)
1 (Red)	DC voltage (Vm)
2	No function
3	No function
4 (Black)	Earth terminal (GND)
5 (White)	Control voltage (Vcc)
6 (Yellow)	Speed command (Vsp)
7 (Brown))	Feed back (FG)

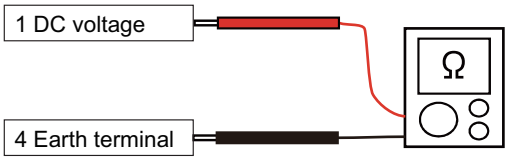

5. Thermistor resistance values

5-1. Indoor unit

■ Room temperature thermistor

Temperature °F (°C)	Resistance (kΩ)	Voltage (V)
14.0 (-10.0)	58.25	0.73
23.0 (-5.0)	44.03	0.93
32.0 (0.0)	33.62	1.15
41.0 (5.0)	25.93	1.39
50.0 (10.0)	20.18	1.66
59.0 (15.0)	15.84	1.94
68.0 (20.0)	12.54	2.22
77.0 (25.0)	10.00	2.50
86.0 (30.0)	8.04	2.77
95.0 (35.0)	6.51	3.03
104.0 (40.0)	5.30	3.27
113.0 (45.0)	4.35	3.49

■ Heat exchanger temperature thermistor

Temperature °F (°C)	Resistance (kΩ)	Voltage (V)
-22.0 (-30.0)	1,131.91	0.21
-13.0 (-25.0)	804.52	0.29
-4.0 (-20.0)	579.59	0.40
5.0 (-15.0)	422.89	0.53
14.0 (-10.0)	312.27	0.69
23.0 (-5.0)	233.21	0.88
32.0 (0.0)	176.03	1.10
41.0 (5.0)	134.23	1.36
50.0 (10.0)	103.34	1.63
59.0 (15.0)	80.28	1.92
68.0 (20.0)	62.91	2.21
77.0 (25.0)	49.70	2.51
86.0 (30.0)	39.57	2.79
95.0 (35.0)	31.74	3.06
104.0 (40.0)	25.64	3.30
113.0 (45.0)	20.85	3.53
122.0 (50.0)	17.06	3.73
131.0 (55.0)	14.05	3.90
140.0 (60.0)	11.64	4.02
149.0 (65.0)	9.69	4.19

TROUBLESHOOTING

5-2. Outdoor unit

■ Discharge temperature thermistor

Temperature °F (°C)	Resistance (kΩ)	Voltage (V)
-22.0 (-30.0)	1,013.11	0.06
-12.0 (-25.0)	729.09	0.09
-4.0 (-20.0)	531.56	0.12
5.0 (-15.0)	392.31	0.16
14.0 (-10.0)	292.91	0.21
23.0 (-5.0)	221.09	0.28
32.0 (0.0)	168.60	0.36
41.0 (5.0)	129.84	0.46
50.0 (10.0)	100.91	0.57
59.0 (15.0)	79.12	0.71
68.0 (20.0)	62.55	0.86
77.0 (25.0)	49.84	1.03
86.0 (30.0)	40.01	1.23
95.0 (35.0)	32.35	1.43
104.0 (40.0)	26.34	1.65
113.0 (45.0)	21.58	1.88
122.0 (50.0)	17.79	2.11
131.0 (55.0)	14.75	2.34
140.0 (60.0)	12.30	2.57
149.0 (65.0)	10.32	2.79
158.0 (70.0)	8.70	3.00
167.0 (75.0)	7.36	3.19
176.0 (80.0)	6.27	3.37
185.0 (85.0)	5.36	3.54
194.0 (90.0)	4.60	3.69
203.0 (95.0)	3.96	3.83
212.0 (100.0)	3.43	3.96
221.0 (105.0)	2.98	4.07
230.0 (110.0)	2.60	4.17
239.0 (115.0)	2.27	4.26
248.0 (120.0)	2.00	4.33

TROUBLESHOOTING

■ Heat exchanger temperature thermistor

Temperature °F (°C)	Resistance (kΩ)	Voltage (V)
-22.0 (-30.0)	95.58	0.24
-12.0 (-25.0)	68.90	0.32
-4.0 (-20.0)	50.31	0.43
5.0 (-15.0)	37.19	0.57
14.0 (-10.0)	27.81	0.73
23.0 (-5.0)	21.02	0.92
32.0 (0.0)	16.05	1.14
41.0 (5.0)	12.38	1.39
50.0 (10.0)	9.63	1.65
59.0 (15.0)	7.56	1.93
68.0 (20.0)	5.98	2.21
77.0 (25.0)	4.77	2.49
86.0 (30.0)	3.84	2.77
95.0 (35.0)	3.11	3.02
104.0 (40.0)	2.53	3.26
113.0 (45.0)	2.08	3.48
122.0 (50.0)	1.71	3.68
131.0 (55.0)	1.42	3.85
140.0 (60.0)	1.19	4.00
149.0 (65.0)	1.00	4.13
158.0 (70.0)	0.84	4.25
167.0 (75.0)	0.71	4.35
176.0 (80.0)	0.61	4.43

■ Outdoor temperature thermistor

Temperature °F (°C)	Resistance (kΩ)	Voltage (V)
-22.0 (-30.0)	224.33	0.73
-12.0 (-25.0)	159.71	0.97
-4.0 (-20.0)	115.24	1.25
5.0 (-15.0)	84.21	1.56
14.0 (-10.0)	62.28	1.90
23.0 (-5.0)	46.58	2.26
32.0 (0.0)	35.21	2.61
41.0 (5.0)	26.88	2.94
50.0 (10.0)	20.72	3.25
59.0 (15.0)	16.12	3.52
68.0 (20.0)	12.64	3.76
77.0 (25.0)	10.00	3.97
86.0 (30.0)	7.97	4.14
95.0 (35.0)	6.40	4.28
104.0 (40.0)	5.18	4.41
113.0 (45.0)	4.21	4.51
122.0 (50.0)	3.45	4.59
131.0 (55.0)	2.85	4.65

4. CONTROL AND FUNCTIONS

CONTENTS

4. CONTROL AND FUNCTIONS

1. Compressor frequency control 04-1
1-1. Cooling operation 04-1
1-2. Heating operation 04-2
1-3. Dry operation 04-3
1-4. Compressor frequency at normal start-up 04-3
1-5. Compressor frequency limitation by outdoor temperature 04-4
2. Auto changeover operation 04-5
3. Fan control 04-7
3-1. Indoor fan control 04-7
3-2. Outdoor fan control 04-11
4. Louver control 04-13
4-1. Vertical airflow direction louver control 04-13
4-2. Adjust the horizontal louver 04-13
4-3. Swing operation 04-13
5. Timer operation control 04-14
5-1. Wireless remote control 04-14
5-2. Wired remote control 04-16
6. Defrost operation control 04-19
6-1. Defrost operation in heating operation stopped 04-20
7. Various control 04-21
7-1. Auto restart 04-21
7-2. MANUAL AUTO operation 04-21
7-3. Forced cooling operation 04-22
7-4. 10 °C HEAT operation 04-22
7-5. ECONOMY operation 04-23
7-6. POWERFUL operation 04-23
7-7. Compressor preheating 04-23
7-8. Electronic expansion valve control 04-24
7-9. Prevention to restart for 3 minutes (3 minutes st) 04-24
7-10. 4-way valve control 04-24
7-11. Outdoor unit low noise operation 04-24
8. Various protections 04-25
8-1. Discharge gas temperature over-rise prevention control 04-25
8-2. Anti-freezing control (cooling and dry mode) 04-25
8-3. Current release control 04-26
8-4. Cooling pressure over-rise protection 04-26
8-5. Low outdoor temperature protection 04-26
8-6. High temperature and high pressure release control 04-27

1. Compressor frequency control

1-1. Cooling operation

A sensor (room temperature thermistor) built in the indoor unit body will usually perceive difference or variation between a set temperature and present room temperature, and controls the operation frequency of the compressor.

- If the room temperature is 6.0 °C higher than a set temperature, the compressor operation frequency will attain to maximum performance.
- If the room temperature is 1.0 °C lower than a set temperature, the compressor will be stopped.
- When the room temperature is within the range of +6.0°C to -1.0°C of the setting temperature, the compressor frequency is controlled within the range shown in the table below. However, the maximum frequency is limited in the range shown in the figure below based on the indoor fan mode and the outdoor temperature.

- **Compressor frequency range**

Model name	Minimum frequency	Maximum frequency
ASUG09LMAS	12 rps	67 rps
ASUG12LMAS	12 rps	89 rps

- **Limit of maximum speed based on outdoor temperature**

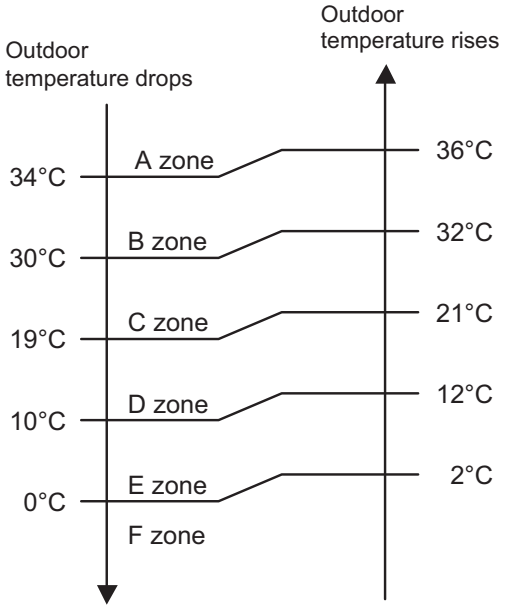

Unit: rps

Model name	Outdoor temperature zone	Indoor unit fan mode			
		HIGH	MED	LOW	QUIET
ASUG09LMAS	A zone	67	47	36	26
	B zone	67	47	36	26
	C zone	67	47	36	26
	D zone	54	42	34	26
	E zone	54	42	34	26
	F zone	54	42	34	26
ASUG12LMAS	A zone	89	54	38	26
	B zone	89	54	38	26
	C zone	89	54	38	26
	D zone	62	44	38	26
	E zone	62	44	38	26
	F zone	62	44	38	26

1-2. Heating operation

A sensor (room temperature thermistor) built in indoor unit body will usually perceive difference or variation between setting temperature and present room temperature, and controls operation frequency of compressor.

- If the room temperature is 6.0 °C lower than a set temperature, the compressor operation frequency will attain to maximum performance.
- If the room temperature is 1.0 °C higher than a set temperature, the compressor will be stopped.
- When the room temperature is within the range of +1.0°C to -6.0°C of the setting temperature, the compressor frequency is controlled within the range shown below.

- **Compressor frequency range**

Unit: rps

Model name	Minimum frequency	Maximum frequency
ASUG09LMAS ASUG12LMAS	12	110

- **Limit of maximum speed based on outdoor temperature**
  In heating operation, maximum frequency is defined by outdoor temperature and fan mode.

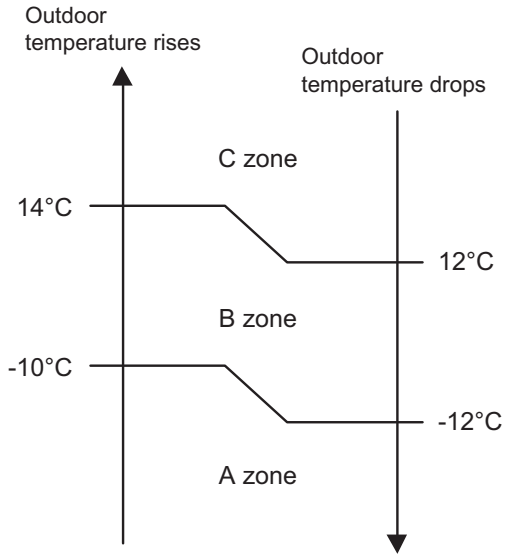

Unit: rps

Model name	Outdoor temperature zone	Indoor unit fan mode			
		HIGH	MED	LOW	QUIET
ASUG09LMAS ASUG12LMAS	A zone	110	89	77	67
	B zone	110	89	77	67
	C zone	110	89	77	36

CONTROL AND FUNCTIONS

1-3. Dry operation

The compressor rotation frequency shall change according to the temperature, set temperature, and room temperature variation which the room temperature sensor of the indoor unit has detected as shown in the table below.

Zone is defined by set temperature and room temperature.

- **Compressor frequency range**

Unit: rps

Model name	Outdoor temperature zone	Operating frequency
ASUG09LMAS ASUG12LMAS	X zone	22
	J zone	16
	Y zone	0

- **Compressor control based on room temperature**

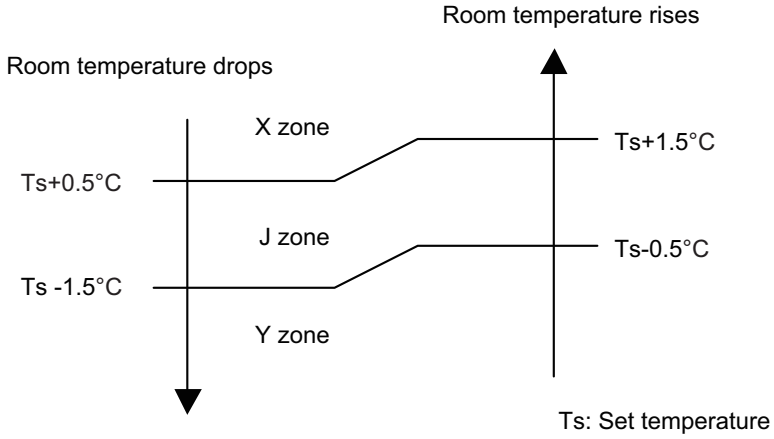

1-4. Compressor frequency at normal start-up

■ Models: AOUG09LMAS1 and AOUG12LMAS1

Compressor frequency soon after starting is controlled as below.

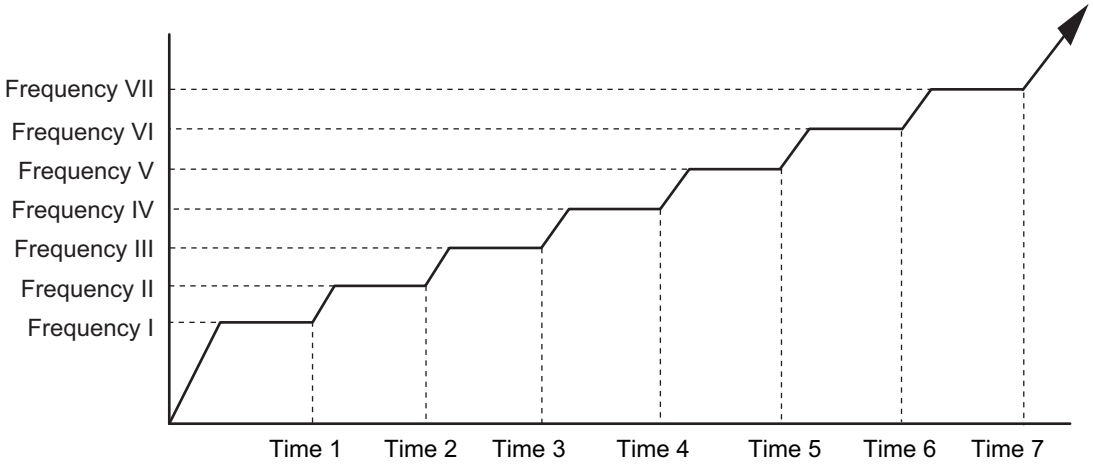

Frequency (rps)	I	II	III	IV	V	VI	VII
	45	56	68	77	84	93	103
Time (sec)	1	2	3	4	5	6	7
	60	140	170	220	280	360	430

CONTROL AND FUNCTIONS

1-5. Compressor frequency limitation by outdoor temperature

The minimum compressor frequency is limited by outdoor temperature as below.

- **Cooling/Dry mode**

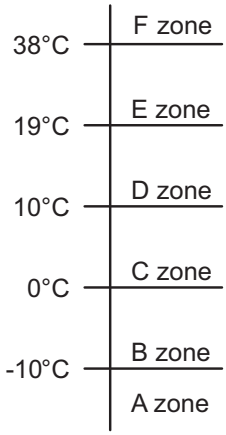

Model name	Outdoor temperature zone	Limitation of compressor frequency
AOUG09LMAS1 AOUG12LMAS1	A zone	35 rps
	B zone	35 rps
	C zone	35 rps
	D zone	15 rps
	E zone	15 rps
	F zone	36 rps

- **Heating mode**

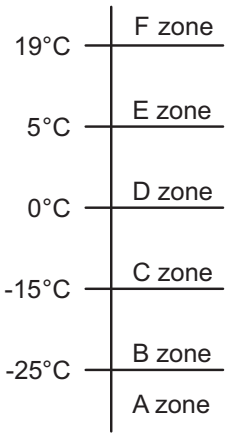

Model name	Outdoor temperature zone	Limitation of compressor frequency
AOUG09LMAS1 AOUG12LMAS1	A zone	37 rps
	B zone	37 rps
	C zone	36 rps
	D zone	15 rps
	E zone	15 rps
	F zone	1 rps

CONTROL AND FUNCTIONS

2. Auto changeover operation

When the air conditioner is set to AUTO mode by remote controller, operation starts in the optimum mode from among heating, cooling, dry and monitoring modes. During operation, the optimum mode is automatically switched in accordance with temperature changes. The temperature can be set between 18°C and 30°C in 1.0°C steps.

- When operation starts, indoor fan and outdoor fan are operated for around 1 minute.
  Room temperature and outdoor temperature are sensed, and the operation mode is selected in accordance with the table below.

Room temperature	Operation mode
Tr > Ts + 2°C	Cooling
Ts + 2°C ≥ Tr ≥ Ts - 2°C	Middle zone
Tr < Ts - 2°C	Heating

Tr: Room temperature

Ts: Setting temperature

NOTE: When the operation mode is middle zone, indoor unit operation mode is selected as below.

- Same operation mode is selected as outdoor unit.
  If outdoor unit is operating in cooling and heating mode, indoor unit will be operated by the same operation mode.
- Selected by outdoor temperature.
  If outdoor unit is operating in other than cooling and heating mode, indoor unit will be operated according to the outdoor temperature as below.

Outdoor temp.	Operation mode
25°C or more	Cooling
Less than 25°C	Heating

- When the compressor was stopped for 6 consecutive minutes by temperature control function after the cooling or heating mode was selected as above, operation is switched to monitoring mode and the operation mode selection is done again.

- When the middle zone is selected on the predetermining of the operation mode, the operation mode before the changing to the monitoring mode is selected.

CONTROL AND FUNCTIONS

Operation flow chart

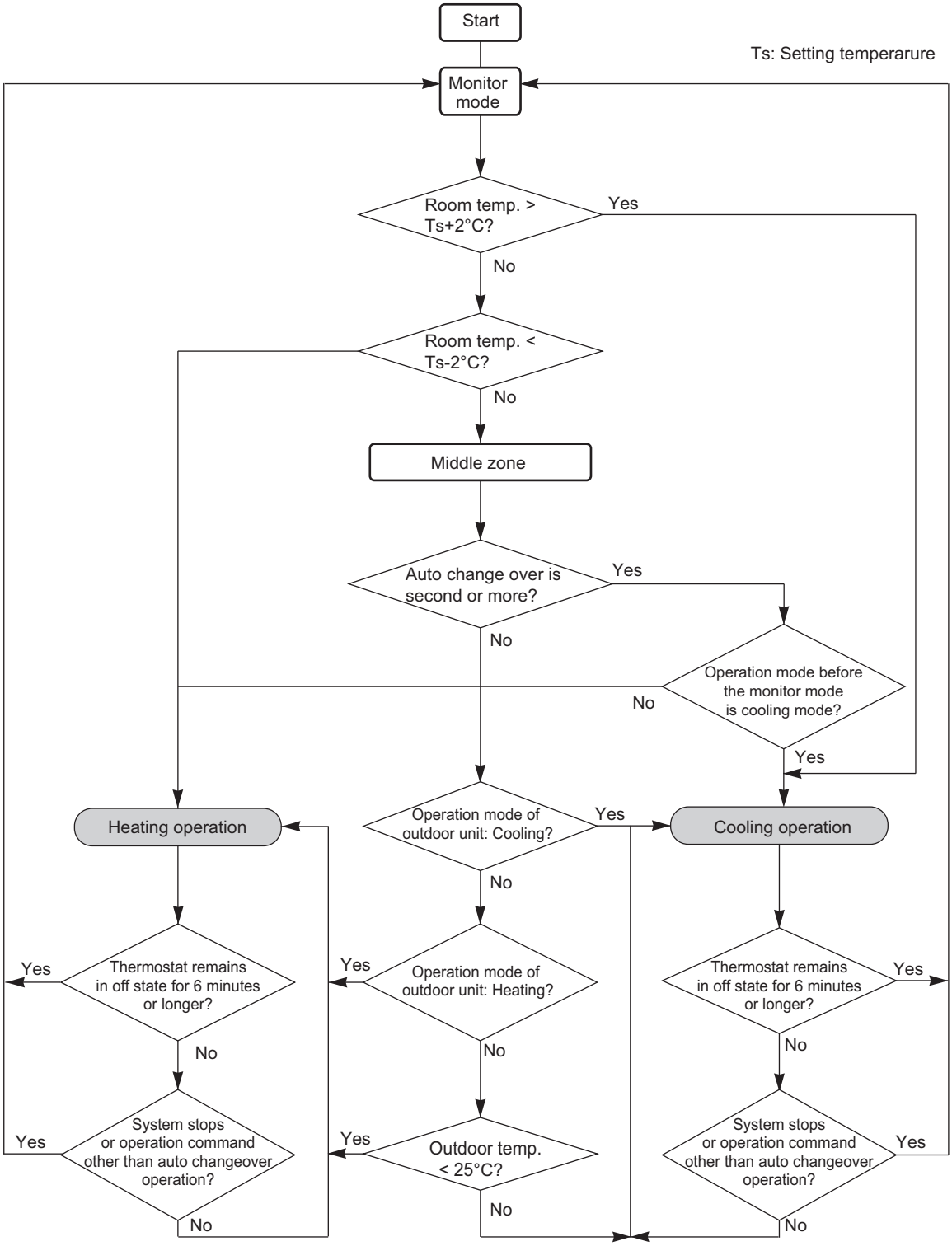

CONTROL AND FUNCTIONS

3. Fan control

Tr: Room temperature
Ts: Setting temperature

3-1. Indoor fan control

■ Fan speed

Indoor fan speed is defined as below.

Operation mode	Fan mode	Speed (rpm)
		ASUG09LMAS ASUG12LMAS
Heating	POWERFUL	1,290
	HIGH	1,220
	MED+	1,140
	MED	1,060
	LOW	900
	QUIET	630
	Cool air prevention	550
	S-LOW	470
Cooling/Fan	POWERFUL	1,290
	HIGH	1,220
	MED	1,000
	LOW	810
	QUIET	550
	Soft quiet	490*1
	S-LOW	470*2
Dry		X zone: 550 J zone:550

*1: Fan mode only
*2: Cooling mode only

■ Fan operation

Airflow can be switched in 5 steps such as AUTO, QUIET, LOW, MED, HIGH while indoor unit fan only runs.
When fan mode is set at AUTO, it operates on MED fan speed.

CONTROL AND FUNCTIONS

■ Cooling operation

Switch the airflow AUTO, and indoor fan motor will run according to room temperature, as below.
On the other hand, if switched in HIGH—QUIET, indoor motor will run at a constant airflow of COOL operation modes QUIET, LOW, MED, HIGH as shown in “Fan speed” above.

Airflow change over (Cooling: Auto)

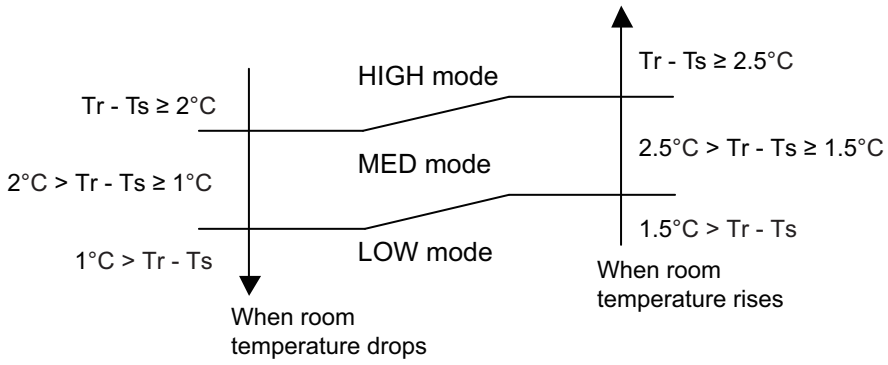

■ Dry operation

During dry operation, fan speed setting can not be changed as shown in “Fan speed” above.

■ Heating operation

Switch the airflow AUTO, and the indoor fan motor will run according to a room temperature, as below.
On the other hand, if switched in HIGH—QUIET, the indoor motor will run at a constant airflow of HEAT operation modes QUIET, LOW, MED, HIGH as shown in “Fan speed” above.

Airflow change over (Heating: Auto)

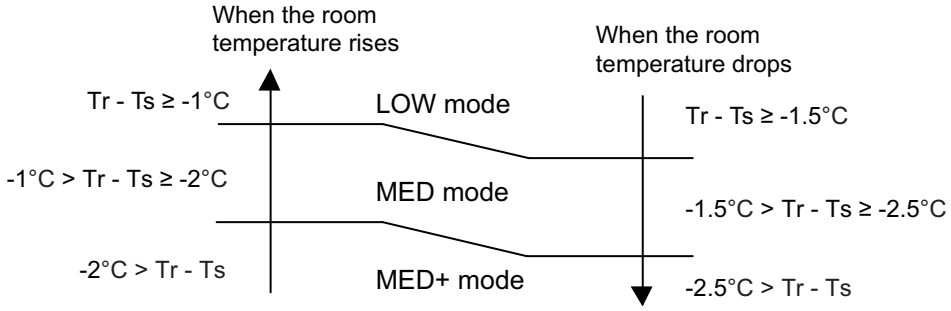

CONTROL AND FUNCTIONS

■ Cool air prevention control (heating mode)

The maximum value of the indoor fan speed is set as shown below, based on the detected temperature by the indoor heat exchanger sensor on heating mode.

- **Normal operation**

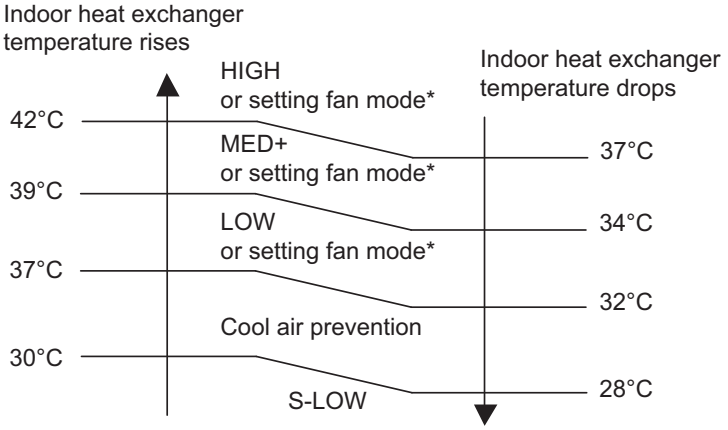

*: Lower speed is selected.

7 minutes later:

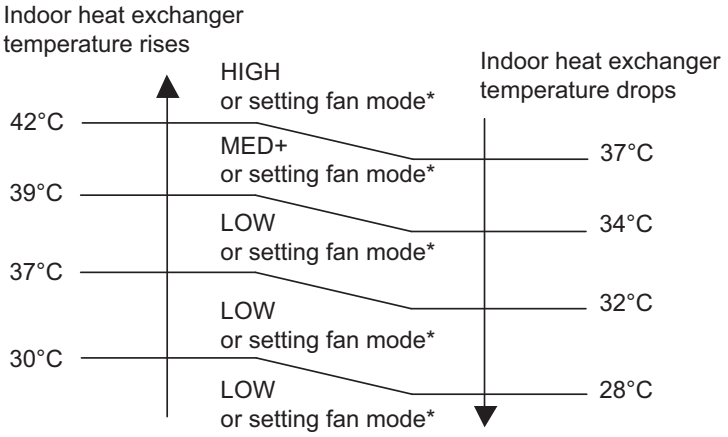

*: Lower speed is selected.

CONTROL AND FUNCTIONS

- **Powerful operation**

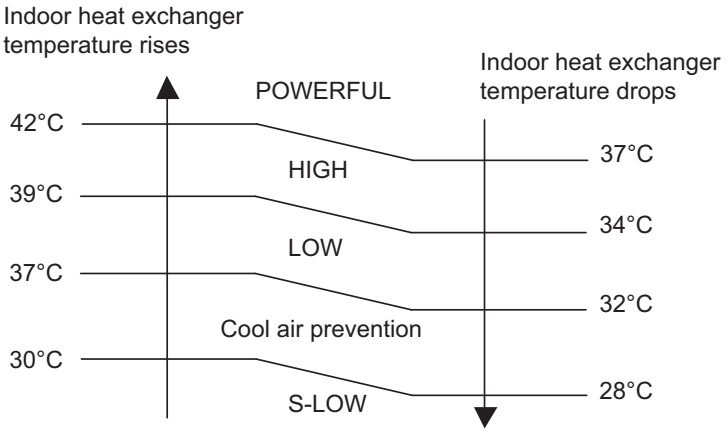

7 minutes later:

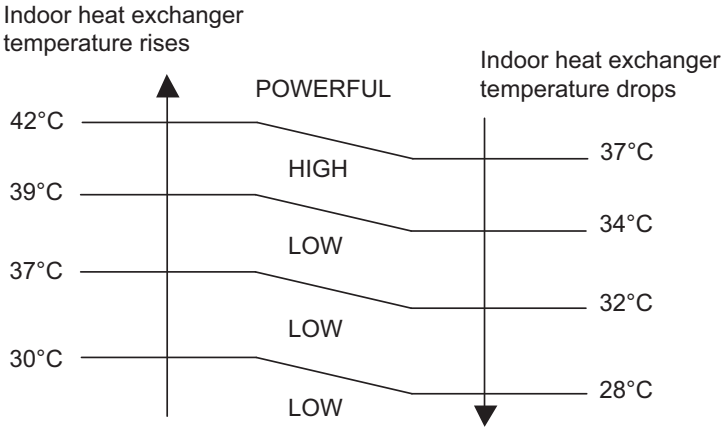

- **10 °C HEAT operation**

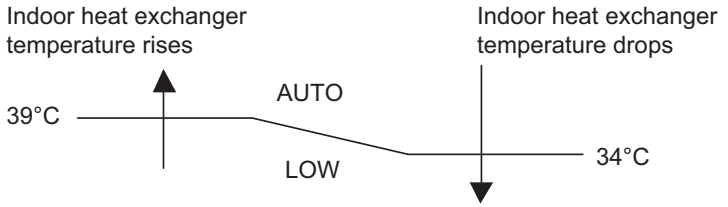

■ Moisture return prevention control (cooling and dry mode)

Switch the airflow AUTO at cooling mode, and the indoor fan motor will run as shown below.

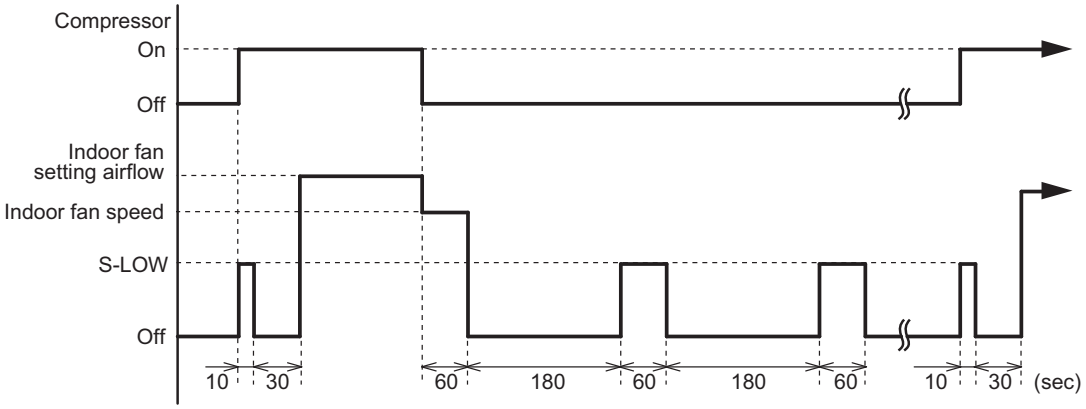

CONTROL AND FUNCTIONS

3-2. Outdoor fan control

■ Outdoor fan motor

This outdoor unit has a DC fan motor. (Control method is different between AC and DC motors.)

■ Fan speed

● Model: AOUG09LMAS1

Fan speed is defined by outdoor temperature and compressor frequency.

- **Outside air temperature zone selection**

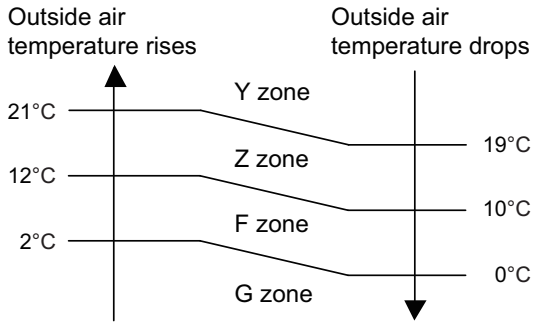

Unit: rpm

Fan step	Cooling	Heating	Dry	Cooling or dry		
	Y zone		Y zone	Z zone	F zone	G zone
S-HIGH2	—	1,070	—	—	—	—
S-HIGH1	990	1,070	—	—	—	—
HIGH1	990	1,070	—	—	—	—
10	—	1,070	—	—	—	—
9	990	1,070	990	350	260	200
8	990	1,070	990	350	260	200
7	820	1,040	820	350	260	200
6	820	820	820	250	200	170
5	820	700	820	220	200	170
4	740	610	740	220	200	170
3	660	510	660	220	200	170
2	610	510	610	220	200	170
1	600	510	600	220	200	170

NOTE: After defrost control on the heating mode, the fan speed is kept higher regardless of the compressor frequency.
Fan speed after defrost control: 1,070 rpm

CONTROL AND FUNCTIONS

● Model: AOUG12LMAS1

Fan speed is defined by outdoor temperature and compressor frequency.

- **Outside air temperature zone selection**

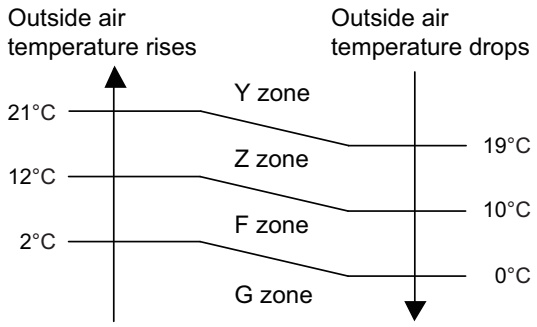

Unit: rpm

Fan step	Cooling	Heating	Dry	Cooling or dry		
	Y zone		Y zone	Z zone	F zone	G zone
S-HIGH2	—	1,120	—	—	—	—
S-HIGH1	990	1,120	—	—	—	—
HIGH1	990	1,120	—	—	—	—
10	—	1,120	—	—	—	—
9	990	1,120	990	390	320	240
8	940	1,120	940	390	320	240
7	940	940	940	390	320	240
6	940	780	940	300	240	200
5	890	690	890	250	240	200
4	790	630	790	250	240	200
3	710	570	710	250	240	200
2	660	570	660	250	240	200
1	620	570	620	250	240	200

NOTE: After defrost control on the heating mode, the fan speed is kept higher regardless of the compressor frequency.
Fan speed after defrost control: 1,120 rpm

CONTROL AND FUNCTIONS

4. Louver control

4-1. Vertical airflow direction louver control

Each time the button is pressed, the air direction range will change as below:

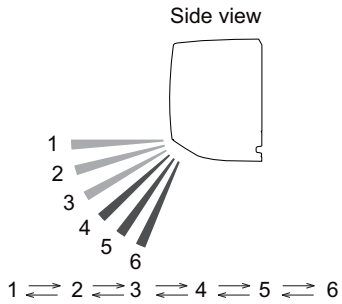

- Remote controller display is not changed.
- Vertical airflow direction is set automatically as shown, in accordance with the type of operation selected.

Cooling / Dry mode	: Horizontal flow 1
Heating mode	: Downward flow 6

- During AUTO operation, for the first a few minutes after beginning operation, airflow will be horizontal 1; the air direction cannot be adjusted during this period.
  The airflow direction setting will temporarily become 1 when the temperature of the airflow is low at the start of the Heating mode.
- After beginning of AUTO/HEAT mode operated and automatic defrosting operation, the airflow will be horizontal 1. However, the airflow direction cannot be adjusted at beginning AUTO operation mode.

4-2. Adjust the horizontal louver

Move the horizontal louvers to adjust airflow direction you prefer.

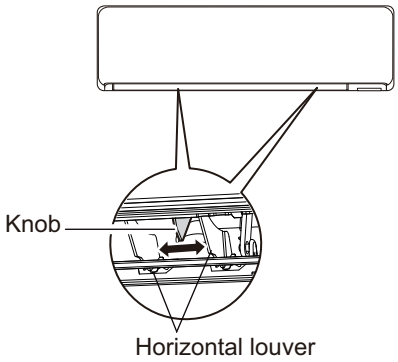

4-3. Swing operation

- To select vertical airflow swing operation
  When the swing signal is received, the vertical airflow direction louver starts to swing.
  – Swinging range
    - Cooling mode/dry mode/fan mode (1 to 3): 1 ↔ 4
    - Heating mode/fan mode (4 to 6): 3 ↔ 6
  – When the indoor fan is S-LOW or stop mode, the swing operation is interrupted and it stops at either upper end or bottom end.

- To select horizontal airflow swing operation
  No function

CONTROL AND FUNCTIONS

5. Timer operation control

5-1. Wireless remote control

On/Off timer	Program timer	Sleep timer	Weekly timer
○	○	○	○

■ On/Off timer

- Off timer: When the clock reaches the set timer, the air conditioner will be turned off.

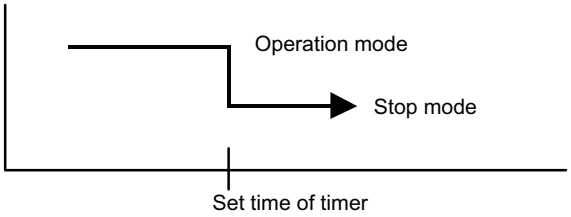

- On timer: When the clock reaches the set timer, the air conditioner will be turned on.

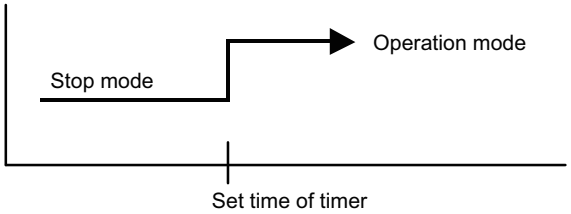

■ Program timer

- The program timer allows the off timer and the on timer to be used in combination one time.

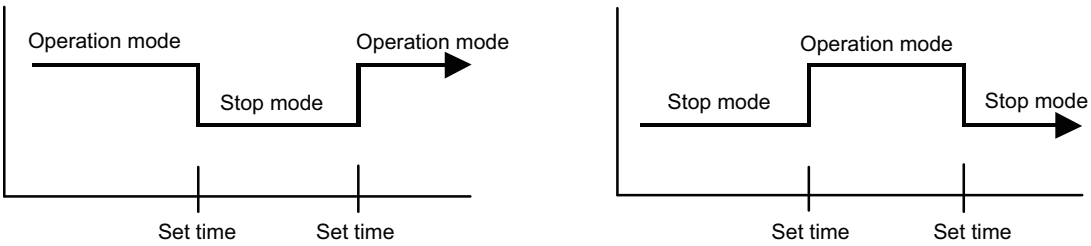

- Operation will start from the timer setting (either off timer and on timer) whichever is closest to the clock current timer setting. The order of operations is indicated by the allow in the remote controller screen.
- Sleep timer operation cannot be combined with on timer operation.

CONTROL AND FUNCTIONS

■ Sleep timer

If the sleep timer is set, the room temperature is monitored and the operation is stopped automatically. If the operation mode or the set temperature is change after the sleep timer is set, the operation is continued according to the changed setting of the sleep timer from that time on.

- In the cooling operation mode
  When the sleep timer is set, the setting temperature is increased 1°C. It increases the setting temperature another 1°C after 1 hour. After that, the setting temperature is not changed and the operation is stopped at the setting time.

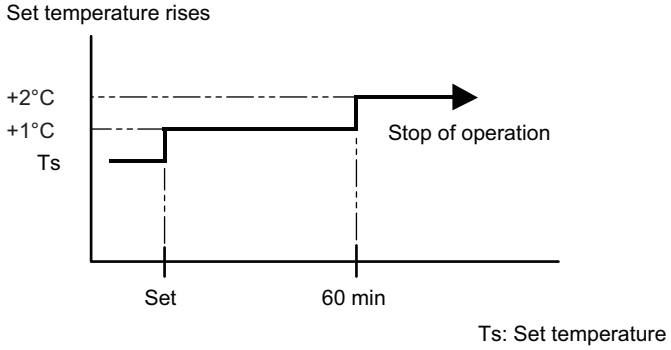

- In the heating operation mode
  When the sleep timer is set, the setting temperature is decreased 1°C. It decreases the setting temperature another 1°C every 30 minutes. Upon lowering 4°C, the setting temperature is not changed and the operation is stopped at the setting time.

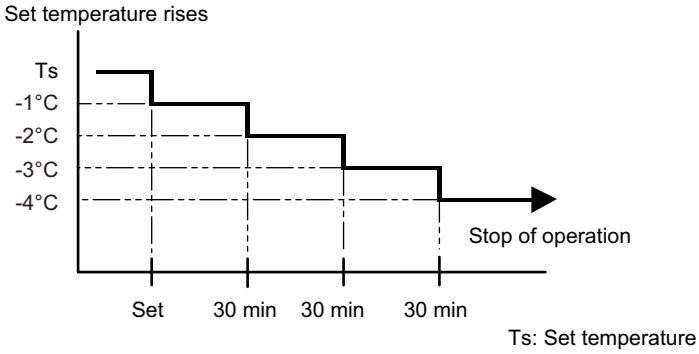

■ Weekly timer

On and off timer can be combined, and up to 4 reservations per day and 28 reservations per week. Before setting the program, set the week and time of the air conditioner at first. If the week and time are not set, the weekly timer will not operate correctly at the setting time.

CONTROL AND FUNCTIONS

5-2. Wired remote control

On/Off timer	Program timer	Sleep timer	Weekly timer	Temperature set back timer
○	○	○	○	○

■ On/Off timer

- Off timer: When the clock reaches the set timer, the air conditioner will be turned off.

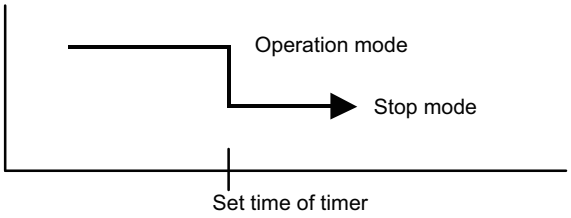

- On timer: When the clock reaches the set timer, the air conditioner will be turned on.

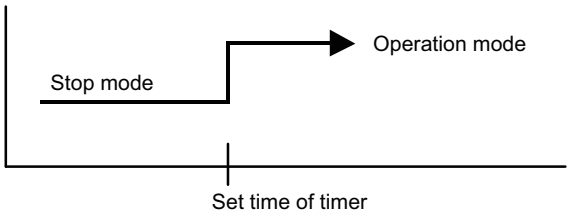

■ Program timer

- The program timer allows the off timer and the on timer to be used in combination one time.

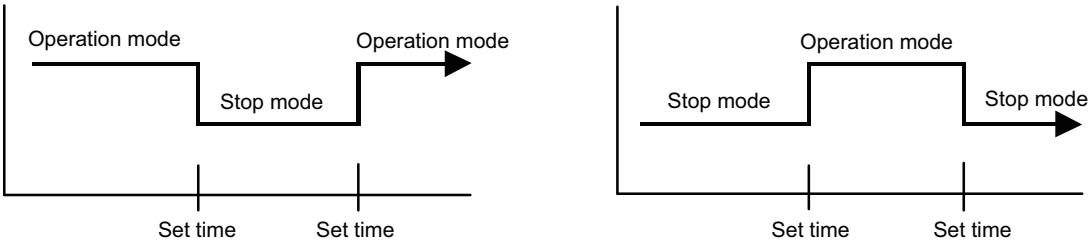

- Operation will start from the timer setting (either off timer and on timer) whichever is closest to the clock current timer setting. The order of operations is indicated by the allow in the remote controller screen.
- Sleep timer operation cannot be combined with on timer operation.

CONTROL AND FUNCTIONS

■ Sleep timer

If the sleep timer is set, the room temperature is monitored and the operation is stopped automatically. If the operation mode or the set temperature is change after the sleep timer is set, the operation is continued according to the changed setting of the sleep timer from that time on.

- In the cooling operation mode
  When the sleep timer is set, the setting temperature is increased 1°C. It increases the setting temperature another 1°C after 1 hour. After that, the setting temperature is not changed and the operation is stopped at the setting time.

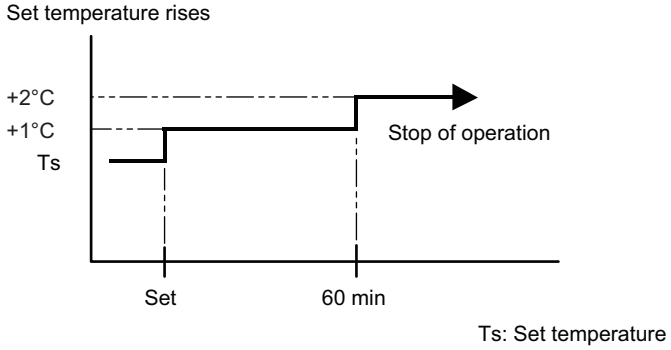

- In the heating operation mode
  When the sleep timer is set, the setting temperature is decreased 1°C. It decreases the setting temperature another 1°C every 30 minutes. Upon lowering 4°C, the setting temperature is not changed and the operation is stopped at the setting time.

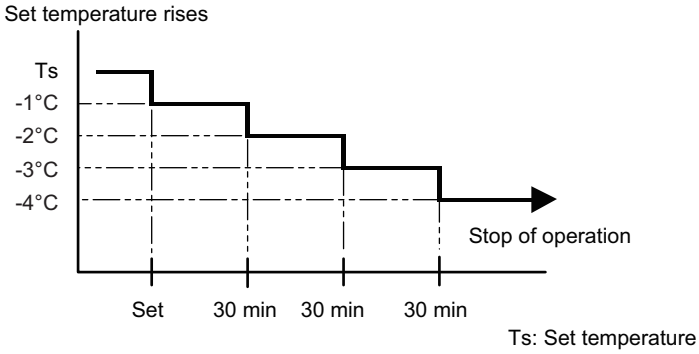

■ Weekly timer

On and off timer can be combined, and up to 4 reservations per day and 28 reservations per week. Before setting the program, set the week and time of the air conditioner at first. If the week and time are not set, the weekly timer will not operate correctly at the setting time.

CONTROL AND FUNCTIONS

■ Temperature set back timer

- The SET BACK timer only changes the set temperature for 7 days, it cannot be used to start or stop air conditioner operation.
- The SET BACK timer can be set to operate up to two times per day but only one temperature setting can be used.
- During COOLING/DRY mode, the air conditioner will operate at a minimum of 18°C even if the SET BACK temperature is set to 17°C or lower.

Case of SET BACK timer on the Cooling operation. (Setting temperature :22°C, SET BACK temperature :26°C)

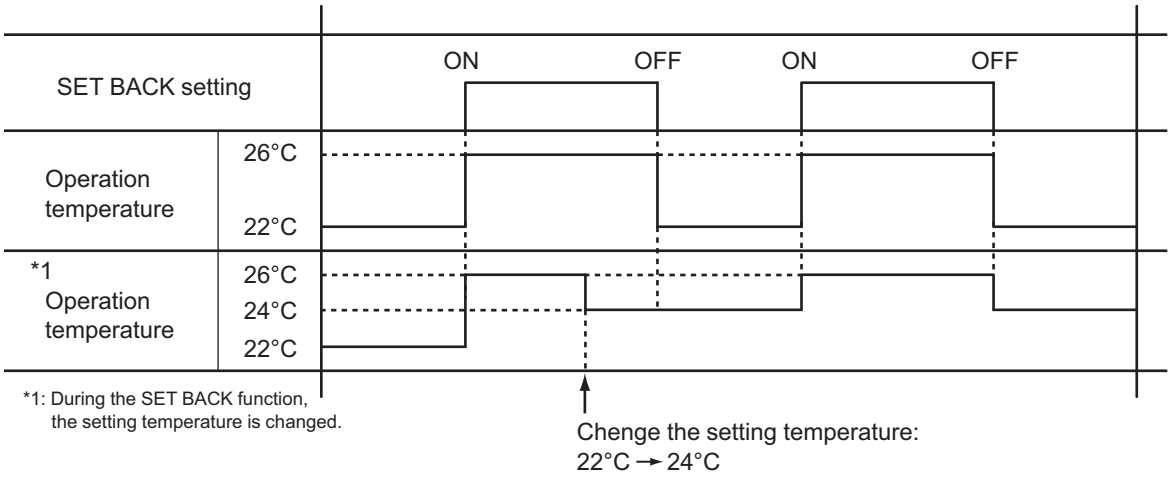

CONTROL AND FUNCTIONS

6. Defrost operation control

Tn: Outdoor unit heat exchanger temperature
Ta: Outdoor temperature
Tn10: Temperature at 10 minutes after compressor start
Tnb: Temperature before 5 minutes

• Triggering condition

The defrost operation starts when outdoor unit heat exchanger temperature sensor detects the temperature lower than the values shown below.

– **1st time defrosting after starting operation**

Compressor integrating operation time	Less than 17 min.	17 to 57 min.	More than 57 min.
Condition	Does not operate	Tn ≤ -9°C and Tn-Ta ≥ 5 deg	Tn ≤ -5°C

– **2nd time and after**

Compressor integrating operation time	Less than 40 min.	More than 40 min.
Condition	Does not operate	Tn-Tn10 < -5 deg (Tn ≤ -6°C) Tn-Tnb < -2 deg (Tn ≤ -6°C) Tn ≤ -17°C (Ta ≥ -10°C) Tn ≤ -7°C or Tn ≤ -20°C (Ta < -10°C)

– **Integrating defrost (Constant monitoring)**

Compressor integrating operation time	More than 240 min. (For long continuous operation)	More than 213 min. (For long continuous operation	Less than 10 min.* (For intermittent operation)
Condition	Tn ≤ -3°C	Tn ≤ -5°C	Count of the compressor off: 40 times

*: If the compressor continuous operation time is less than 10 minutes, the number of the compressor off is counted. If any defrost operated, the compressor off count is cleared.

• Release condition

The defrost operation is released when either one of the conditions below is satisfied.

Outdoor unit heat exchanger temperature (after 1 minute or later since compressor start)	16°C or more
Compressor operation time	15 minutes

CONTROL AND FUNCTIONS

6-1. Defrost operation in heating operation stopped

If the outdoor unit is frosted when stopping the heating operation, it stops after performing the automatic defrosting operation.

In this time, if the indoor unit operation lamp flashes slowly (6 sec on/2 sec off), the outdoor unit allow the heat exchanger to defrost, and then stop.

• Triggering condition

When all of the following conditions are satisfied in heating operation

– Compressor operation integrating time: 30 minutes or more
– Compressor continuous operation time: 10 minutes or more
– Outdoor unit heat exchanger temperature: -4°C or less

• Release condition

The defrost operation is released when either one of the conditions below is satisfied.

Outdoor unit heat exchanger temperature (after 1 minute or later since compressor start)	16°C or more
Compressor operation time	15 minutes

CONTROL AND FUNCTIONS

7. Various control

7-1. Auto restart

When the power was interrupted by a power failure etc. during operation, the operation contents at that time are memorized and when the power is recovered, operation is automatically started with the memorized operation contents.

Operation contents memorized when the power is interrupted
Operation mode
Setting temperature
Fan mode setting
Timer mode and set time (set by wireless remote controller)
Airflow direction setting
Swing
ECONOMY operation
10 °C HEAT operation
Outdoor low noise operation
Remote control setting
WLAN LED setting

CONTROL AND FUNCTIONS

7-2. MANUAL AUTO operation

When the wireless remote controller is lost or battery power dissipated, this function will work without the remote controller.

When MANUAL AUTO button is pressed more than 3 seconds and less than 10 seconds, MANUAL AUTO operation starts as shown in the table below. To stop operation, press the MANUAL AUTO button for 3 seconds.

Operation mode	Auto changeover
Fan mode	AUTO
Timer mode	Continuous (no timer setting available)
Setting temperature	24°C
Vertical airflow direction louver setting	Standard
SWING	Off
ECONOMY	Off
Human sensor	Off

7-3. Forced cooling operation

The outdoor unit may not operate depending on the room temperature.

When FORCED COOLING OPERATION button is pressed more than 10 seconds, forced cooling operation starts as shown in the table below.

Operation mode	Cooling
Fan mode	HIGH
Timer mode	Continuous (no timer setting available)
Setting temperature	24°C
Vertical airflow direction louver setting	Standard
SWING	Off
ECONOMY	Off
Human sensor	Off

- During the forced cooling operation, it operates regardless of room temperature sensor.
- Operation LED and timer LED blink at the same time during the forced cooling operation.
  They blink for 1 second ON and 1 second OFF on both operation LED and timer LED (same as test operation).

By performing one of the following action, test operation will be canceled:

- Pressing the remote controller START/STOP button
- Pressing FORCED COOLING OPERATION button for 3 seconds
- 60 minutes passed after starting forced cooling operation

NOTE: When HEAT operation is selected on the remote controller during forced cooling operation, heating test run will begin in about 3 minutes.

7-4. 10 °C HEAT operation

10 °C HEAT operation performs as below setting when pressing 10 °C HEAT button.

Operation mode	Heating
Setting temperature	10°C
Fan mode	AUTO
LED display	Economy
Defrost operation	Operate as normal

CONTROL AND FUNCTIONS

7-5. ECONOMY operation

The ECONOMY operation starts by pressing ECONOMY button on the remote controller.
The ECONOMY operation is almost the same operation as below settings.

Mode	Cooling/Dry	Heating
Target temperature	Setting temperature +1°C	Setting temperature -1°C

7-6. POWERFUL operation

The POWERFUL operation starts by pressing POWERFUL button on the remote controller.
The indoor unit and outdoor unit operate at maximum power as shown in the table below.

Compressor frequency		Maximum
Fan mode		POWERFUL
Vertical airflow direction louver setting	Cooling	3
	Dry	
	Heating	6

Release condition:

- Cooling/Dry
  Room temperature ≤ Setting temperature -0.5°C or Operation time has passed 20 minutes.
- Heating
  Room temperature ≥ Setting temperature +0.5°C or Operation time has passed 20 minutes.

7-7. Compressor preheating

By preheating the compressor, warm airflow is quickly discharged when the operation is started.

- **Triggering condition**
  - 30 minutes after compressor stopped.
  - Outdoor unit heat exchanger temperature (Tn)

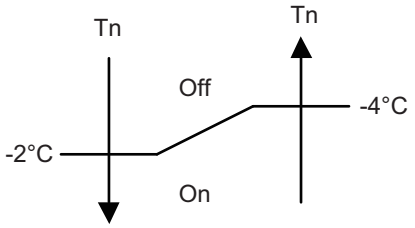

When the jumper wire (JM2) is disconnected:

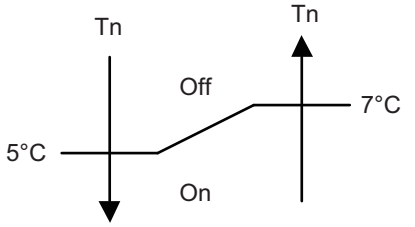

CONTROL AND FUNCTIONS

7-8. Electronic expansion valve control

The most proper opening of the electronic expansion valve is calculated and controlled under the present operating condition based on the table below.

Operation mode	Pulse range
Cooling/dry mode	Between 52 and 480 pulses
Heating mode	

NOTE: At the time of supplying the power to the outdoor unit, the initialization of the electronic expansion valve is operated (528 pulses are input to the closing direction).

7-9. Prevention to restart for 3 minutes (3 minutes st)

When the compressor fails to start for the number of times below, it does not enter operation status for 3 minutes.

Retry number	50
Retry set number	3

When the compressor fails to start in the retry set number above, the compressor is stopped.

7-10. 4-way valve control

- If heating mode is selected at the compressor start, 4-way valve is energized for heating.
- When the air conditioner is switched between cooling and heating mode, compressor is stopped, and the 4-way valve is switched when the 140 seconds passes and the compressor is started.

7-11. Outdoor unit low noise operation

The outdoor unit low noise operation functions by OUTDOOR UNIT LOW NOISE button on the remote controller.
This operation stops the PFC control, and changes the current value.

Operation mode	Current	
	Trigger condition	Release condition
Cooling/Dry mode	25.5 A	25.5 A
Heating mode		

CONTROL AND FUNCTIONS

8. Various protections

8-1. Discharge gas temperature over-rise prevention control

The discharge gas temperature sensor (discharge thermistor: outdoor unit side) detects the discharge gas temperature.

- When the discharge temperature becomes higher than the trigger condition, the compressor frequency is decreased as the table below, and it continues to decrease until the discharge temperature becomes lower than the trigger condition.
- When the discharge temperature becomes lower than the release condition, control of compressor frequency is released.
- When the discharge temperature becomes higher than the compressor protection temperature, the compressor is stopped and the indoor unit LED starts blinking.

Trigger condition	104°C
Compressor frequency	-20 rps/120 seconds
Release condition	101°C
Compressor protection temperature	110°C

CONTROL AND FUNCTIONS

8-2. Anti-freezing control (cooling and dry mode)

The compressor frequency is decrease in cooling and dry mode when the indoor unit heat exchanger temperature sensor detects the temperature lower than the trigger condition.

When the indoor unit heat exchanger temperature reaches release condition, the anti-freezing control is stopped.

Trigger condition		4°C
Release condition	Outdoor temp. ≥ 10°C*1 Outdoor temp. ≥ 12°C*2	7°C
	Outdoor temp. < 10°C*1 Outdoor temp. < 12°C*2	13°C

*1: During the outdoor temperature dropping

*2: During the outdoor temperature rising

8-3. Current release control

The compressor frequency is controlled so that the outdoor unit input current does not exceeds current limit value set according to the outdoor temperature.

The compressor frequency returns according to the operation mode, when the current becomes lower than the release value.

■ Model: AOUG09LMAS1

Operation mode	Outdoor temp. (Ta)	Trigger condition	Release condition
Cooling	50°C ≤ Ta	3.5 A	3.0 A
	46°C ≤ Ta < 50°C	3.5 A	3.0 A
	40°C ≤ Ta < 46°C	4.0 A	3.5 A
	12°C ≤ Ta < 40°C	5.5 A	5.0 A
	2°C ≤ Ta < 12°C	5.5 A	5.0 A
	Ta < 2°C	5.5 A	5.0 A
Heating	17°C ≤ Ta	5.5 A	5.0 A
	12°C ≤ Ta < 17°C	6.0 A	5.5 A
	5°C ≤ Ta < 12°C	7.0 A	6.5 A
	Ta < 5°C	7.0 A	6.5 A

■ Model: AOUG12LMAS1

Operation mode	Outdoor temp. (Ta)	Trigger condition	Release condition
Cooling	50°C ≤ Ta	4.0 A	3.5 A
	46°C ≤ Ta < 50°C	4.0 A	3.5 A
	40°C ≤ Ta < 46°C	5.0 A	4.5 A
	12°C ≤ Ta < 40°C	6.0 A	5.5 A
	2°C ≤ Ta < 12°C	6.0 A	5.5 A
	Ta < 2°C	6.0 A	5.5 A
Heating	17°C ≤ Ta	5.5 A	5.0 A
	12°C ≤ Ta < 17°C	7.0 A	6.5 A
	5°C ≤ Ta < 12°C	7.5 A	7.0 A
	Ta < 5°C	8.5 A	8.0 A

8-4. Cooling pressure over-rise protection

When the outdoor unit heat exchanger temperature reaches trigger condition below, the compressor is stopped and trouble display is performed.

Trigger condition	65°C

8-5. Low outdoor temperature protection

When the outdoor temperature sensor detects lower than the trigger condition below, the compressor is stopped.

Operation mode	Cooling/Dry	Heating
Trigger condition	-15°C	-20°C
Release condition	-10°C	-15°C

CONTROL AND FUNCTIONS

8-6. High temperature and high pressure release control

The compressor is controlled as follows.

■ Models: AOUG09LMAS1 and AOUG12LMAS1

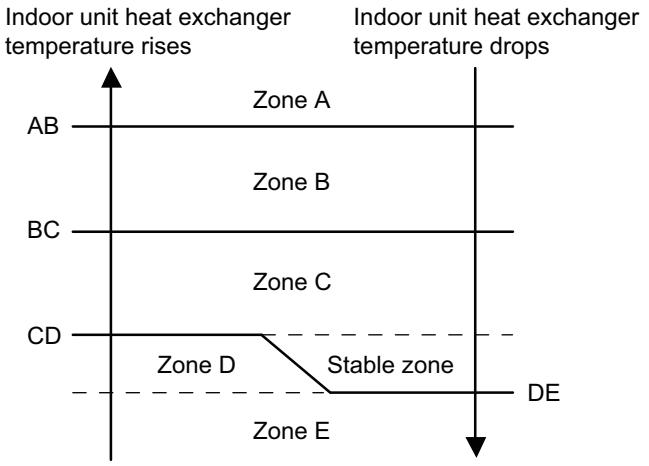

AB: 63°C

BC: 55°C

CD: 53°C

DE: 50°C

Zone	Operation	
Zone A	Compressor is stopped.	
Zone B	The compressor frequency is decreased.	-25 rps/120 sec.
Zone C		-3 rps/60 sec.
Zone D	The protection is released and the operation is returned to normal mode.	
Zone E		

CONTROL AND FUNCTIONS

CONTROL AND FUNCTIONS

5. FILED WORKING

CONTENTS

5. FILED WORKING

1. Function settings 05-1
1-1. Function settings by using remote controller 05-1
1-2. Custom code setting for wireless remote controller 05-9
2. External input and output.....05-10
2-1. External input.....05-11
2-2. External output 05-12
2-3. Combination of external input and output 05-13
2-4. Details of function 05-14

1. Function settings

To adjust the functions of this product according to the installation environment, various types of function settings are available.

NOTE: Incorrect settings can cause a product malfunction.

1-1. Function settings by using remote controller

Some function settings can be changed on the remote controller. After confirming the setting procedure and the content of each function setting, select appropriate functions for your installation environment.

■ Setting procedure by using wireless remote controller

The function number and the associated setting value are displayed on the LCD of the remote controller. Follow the instructions written in the local setup procedure supplied with the remote controller, and select appropriate setting according to the installation environment.

Before connecting the power supply of the indoor unit, reconfirm following items:

- Cover for the electrical enclosure on the outdoor unit is in place.
- There is no wiring mistake.
- Piping air tight test and vacuuming have been performed firmly.
- All the necessary wiring work for outdoor unit has been finished.

After reconfirming the items listed above, connect the power supply of the indoor unit.

NOTES:

- Settings will not be changed if invalid numbers or setting values are selected.
- When optional wired remote controller is used, refer to the installation manual enclosed with the remote controller.

Entering function setting mode:

While pressing the POWERFUL button and TEMP. (∧) button simultaneously, press the RESET button to enter the function setting mode.

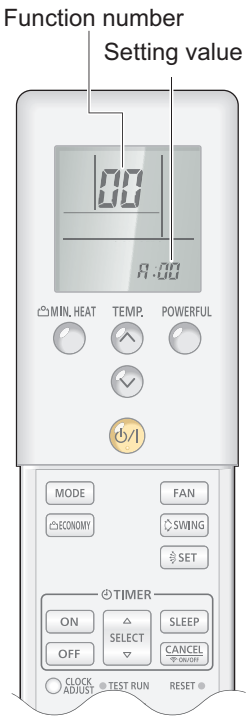

Selecting the function number and setting value:

1. Press the MIN. HEAT button. TEMP. (∧) (∨) buttons to select the function number. Press theMIN. HEAT button to switch between the left and right digits.
2. Press the POWERFUL button to proceed to value setting. To return the function number selection, press the POWERFUL button again.
3. Press the TEMP. (∧) (∨) buttons to select the setting value. To switch between the left and right digits, press the MIN. HEAT button.
4. Press the MODE button once. Confirm that you hear the beep sound.
5. Press the START/STOP button to fix the function setting. Confirm that you hear the beep sound.
6. Press the RESET button to end the function setting mode.
7. After completing the function setting, be sure to disconnect the power supply and then reconnect it.

⚠ CAUTION

After disconnecting the power supply, wait 30 seconds or more before reconnecting it. The function setting will not become active unless the power supply is disconnected and then reconnected.

NOTES:

- The air conditioner custom code is set to A prior to shipment.
- If you do not know the air conditioner custom code setting, try each of the custom codes (A →b →c →d) until you find the code that operates the air conditioner.

FIELD WORKING

■ Contents of function setting

Each function setting listed in this section is adjustable in accordance with the installation environment.

NOTE: Setting will not be changed if invalid numbers or setting values are selected.

● Function setting list

	Function no.	Functions
1)	00	Remote controller address setting
2)	11	Filter sign
3)	30/31	Room temperature control for indoor unit sensor
4)	35/36	Room temperature control for wired remote controller sensor
5)	40	Auto restart
6)	42	Room temperature sensor switching
7)	44	Remote controller custom code
8)	46	External input control
9)	48	Room temperature sensor switching (Aux.)
10)	49	Indoor unit fan control for energy saving for cooling
11)	61	Control switching of external heaters
12)	62	Operating temperature switching of external heaters
13)	66	Outdoor temperature zone boundary temperature A
14)	67	Outdoor temperature zone boundary temperature B
15)	95	Heat insulation condition (building insulation)

FIELD WORKING

1) Remote controller address setting

NOTE: Because this setting is normally done automatically when 2-wire-type wired remote controller is installed, setting is unnecessary.

Multiple indoor units can be operated by using one wired remote controller.

Set the unit number of each indoor unit.

Function number	Setting value	Setting description	Factory setting
00	00	Unit no. 0	♦
	01	Unit no. 1	
	02	Unit no. 2	
	03	Unit no. 3	
	04	Unit no. 4	
	05	Unit no. 5	
	06	Unit no. 6	
	07	Unit no. 7	
	08	Unit no. 8	
	09	Unit no. 9	
	10	Unit no. 10	
	11	Unit no. 11	
	12	Unit no. 12	
	13	Unit no. 13	
	14	Unit no. 14	
	15	Unit no. 15	

NOTE: When different type of indoor units (such as wall mounted type and cassette type, cassette type and duct type, or other combinations) are connected using group control system, some functions may no longer be available.

2) Filter sign

Select appropriate intervals for displaying the filter sign on the indoor unit according to the estimated amount of dust in the air of the room.

If the indication is not required, select "No indication" (03).

Function number	Setting value	Setting description	Factory setting
11	00	Standard (400 hours)	
	01	Long interval (1,000 hours)	
	02	Short interval (200 hours)	
	03	No indication	♦

3) Room temperature control for indoor unit sensor

NOTE: Before performing this setting, refer to Function 95.
Depending on the installed environment, correction of the room temperature sensor may be required. Select the appropriate control setting according to the installed environment.
The temperature of the room temperature sensor is corrected as follows:

Corrected temp. = Temp. of the room temp. sensor - Correction temp. value

Example of correction:

When the temperature of the room temp. sensor is 78°F and the setting value is “03” (-2°F), the corrected temp. will be 80°F (78°F - [-2°F]).

The temperature correction values show the difference from the Standard setting “00” (manufacturer’s recommended value).
*When Function 95-01 (High insulation) is set, the Standard setting “00” will be the same as “No correction 0.0 °F (0.0 °C)” (01).

Function number		Setting value	Setting description		Factory setting
30 (For cooling)	31 (For heating)	00	Standard setting*		♦
		01	No correction 0.0 °F (0.0 °C)		
		02	-1 °F (-0.5 °C)	More cooling Less heating	
		03	-2 °F (-1.0 °C)		
		04	-3 °F (-1.5 °C)		
		05	-4 °F (-2.0 °C)		
		06	-5 °F (-2.5 °C)		
		07	-6 °F (-3.0 °C)		
		08	-7 °F (-3.5 °C)		
		09	-8 °F (-4.0 °C)		
		10	+1 °F (+0.5 °C)	Less cooling More heating	
		11	+2 °F (+1.0 °C)		
		12	+3 °F (+1.5 °C)		
		13	+4 °F (+2.0 °C)		
		14	+5 °F (+2.5 °C)		
		15	+6 °F (+3.0 °C)		
		16	+7 °F (+3.5 °C)		
		17	+8 °F (+4.0 °C)		

FIELD WORKING

4) Room temperature control for wired remote controller sensor

NOTE: Before performing this setting, refer to Function 95.
Depending on the installed environment, correction of the wire remote temperature sensor may be required. Select the appropriate control setting according to the installed environment.

To change this setting, set Function 42 to Both “01”.

Ensure that the Thermo Sensor icon is displayed on the remote controller screen.

*When Function 95-01 (High insulation) is set, the Standard setting "00" will be the same as "No correction 0.0 °C" (01).

Function number		Setting value	Setting description		Factory setting
35 (For cooling)	36 (For heating)	00	Standard setting*		♦
		01	No correction 0.0 °F (0.0 °C)		
		02	-1 °F (-0.5 °C)	More cooling Less heating	
		03	-2 °F (-1.0 °C)		
		04	-3 °F (-1.5 °C)		
		05	-4 °F (-2.0 °C)		
		06	-5 °F (-2.5 °C)		
		07	-6 °F (-3.0 °C)		
		08	-7 °F (-3.5 °C)		
		09	-8 °F (-4.0 °C)		
		10	+1 °F (+0.5 °C)	Less cooling More heating	
		11	+2 °F (+1.0 °C)		
		12	+3 °F (+1.5 °C)		
		13	+4 °F (+2.0 °C)		
		14	+5 °F (+2.5 °C)		
		15	+6 °F (+3.0 °C)		
		16	+7 °F (+3.5 °C)		
		17	+8 °F (+4.0 °C)		

5) Auto restart

Enables or disables automatic restart after a power interruption.

Function number	Setting value	Setting description	Factory setting
40	00	Enable	♦
	01	Disable	

NOTE: Auto restart is an emergency function such as for power outage etc. Do not attempt to use this function in normal operation. Be sure to operate the unit by remote controller or external device.

6) Room temperature sensor switching

(Only for wired remote controller)

When using the wired remote controller temperature sensor, change the setting to "Both" (01).

Function number	Setting value	Setting description	Factory setting
42	00	Indoor unit	♦
	01	Both	

00: Sensor on the indoor unit is active.

01: Sensors on both indoor unit and wired remote controller are active.

NOTE: Remote controller sensor must be turned on by using the remote controller.

FIELD WORKING

7) Remote controller custom code

(Only for wireless remote controller)

The indoor unit custom code can be changed. Select the appropriate custom code.

Function number	Setting value	Setting description	Factory setting
44	00	A	♦
	01	B	
	02	C	
	03	D	

8) External input control

"Operation/Stop" mode or "Forced stop" mode can be selected.

Function number	Setting value	Setting description	Factory setting
46	00	Operation/Stop mode 1 (R.C. enabled)	♦
	01	(Setting prohibited)	
	02	Forced stop mode	
	03	Operation/Stop mode 2 (R.C. disabled)	

9) Room temperature sensor switching (Aux.)

To use the temperature sensor on the wired remote controller only, change the setting to "Wired remote controller" (01).

This function will only work if the function setting 42 is set at "Both" (01).

When the setting value is set to "Both" (00), more suitable control of the room temperature is possible by setting function setting 30 and 31 too.

Function number	Setting value	Setting description	Factory setting
48	00	Both	♦
	01	Wired remote controller	

10) Indoor unit fan control for energy saving for cooling

Enables or disables the power-saving function by controlling the indoor unit fan rotation when the outdoor unit is stopped during cooling operation.

Function number	Setting value	Setting description	Factory setting
49	00	Disable	
	01	Enable	
	02	Remote controller	♦

00: When the outdoor unit is stopped, the indoor unit fan operates continuously following the setting on the remote controller.

01: When the outdoor unit is stopped, the indoor unit fan operates intermittently at a very low speed.

02: Enable or disable this function by remote controller setting.

NOTES:

- As the factory setting, this setting is initially invalidated.
- Set to "00" or "01" when connecting a remote controller that cannot set the Fan control for energy saving function or connecting a network converter.
  To confirm if the remote controller has this setting, refer to the operating manual of each remote controller.

FIELD WORKING

11) Control switching of external heaters

Sets the control method for external heater to be used.
For details, refer to "External heater output" on page 05-19.

Function number	Setting value	Setting description	Factory setting
61	00	Auxiliary heater control 1	♦
	01	Auxiliary heater control 2	
	02	Heat pump prohibition control	
	03	Auxiliary heater control by outdoor temperature 1	
	04	Auxiliary heater control by outdoor temperature 2	

12) Operating temperature switching of external heaters

Sets the temperature conditions when the external heater is ON.
For details, refer to "External heater output" on page 05-19.

Function number	Setting value	Setting description		Factory setting
		Heater: On	Heater: Off	
62	00	-5.4 °F (-3 °C)	-1.8 °F (-1 °C)	♦
	01	-3.6 °F (-2 °C)	-1.8 °F (-1 °C)	
	02	-3.6 °F (-2 °C)	-1.8 °F (-1 °C)	
	03	-5.4 °F (-3 °C)	-1.8 °F (-1 °C)	
	04	-7.2 °F (-4 °C)	-1.8 °F (-1 °C)	
	05	-9.0 °F (-5 °C)	-1.8 °F (-1 °C)	

13) Outdoor temperature zone boundary temperature A

Setting required if changing of the outdoor temperature setting for heat pump prohibition zone is required when auxiliary heater control by outdoor temperature 1 and 2 are performed on the indoor unit. For details, refer to "External heater output" on page 05-19.

Function number	Setting value	Setting description	Factory setting
66	00	-4.0 °F (-20 °C)	♦
	01	-0.4 °F (-18 °C)	
	02	3.2 °F (-16 °C)	
	03	6.8 °F (-14 °C)	
	04	10.4 °F (-12 °C)	
	05	14.0°F (-10 °C)	
	06	17.6 °F (-8 °C)	
	07	21.2 °F (-6 °C)	
	08	24.8 °F (-4 °C)	

FIELD WORKING

14) Outdoor temperature zone boundary temperature B

Setting required if changing of the outdoor temperature setting for heat pump only zone is required when auxiliary heater control by outdoor temperature 1 is performed on the indoor unit. For details, refer to "External heater output" on page 05-19.

Function number	Setting value	Setting description	Factory setting
67	00	42.8 °F (6 °C)	♦
	01	14.0 °F (-10 °C)	
	02	17.6 °F (-8 °C)	
	03	21.2 °F (-6 °C)	
	04	24.8 °F (-4 °C)	
	05	28.4°F (-2 °C)	
	06	32.0 °F (0 °C)	
	07	35.6 °F (2 °C)	
	08	39.2 °F (4 °C)	
	09	42.8 °F (6 °C)	
	10	46.4 °F (8 °C)	
	11	50.0 °F (10 °C)	
	12	53.6 °F (12 °C)	
	13	57.2 °F (14 °C)	
	14	60.8 °F (16 °C)	
	15	64.4 °F (18 °C)	

15) Heat insulation condition (building insulation)

Heat insulation conditions differ according to the installed environment.

"Standard insulation" (00) allows system to rapidly respond to the cooling or heating load changes.

"High insulation" (01) is when the heat insulation structure of the building is high and does not require system to rapidly respond to cooling or heating load changes.

When "High insulation" (01) is selected:

- Overheating (overcooling) is prevented at the start-up.
- All room-temperature control settings (Function 30, 31, 35, and 36) will reset to "No correction 0.0 °F (0.0 °C)".

Function number	Setting value	Setting description	Factory setting
95	00	Standard insulation	♦
	01	High insulation	

NOTE: When changing Function 95, perform this setting before other room-temperature control settings (Function 30, 31, 35, and 36). If Function 95 is not set first, room-temperature control settings (Function 30, 31, 35, and 36) will be reset and you must re-do them again.

FIELD WORKING

1-2. Custom code setting for wireless remote controller

To interconnect the air conditioner and the wireless remote controller, assignment of the custom code for the wireless remote controller is required.

NOTE: Air conditioner cannot receive a signal if the air conditioner has not been set for the custom code.

When 2 or more air conditioners are installed in a room, and the remote controller is operating an air conditioner other than the one you wish to set, change the custom code of the remote controller to operate only the air conditioner you wish to set. (4 selections possible.)

Confirm the setting of the remote controller custom code and the function setting. If these do not match, the remote controller cannot be used to operate for the air conditioner.

1. Press the START/STOP button until only the clock is displayed on the remote controller display.
2. Press the MODE button for at least 5 seconds to display the current custom code. (Initially set to A.)
3. Press the TEMP. (∧) (∨) buttons to change the custom code between A →b →c →d. Match the code on the display to the air conditioner custom code. (Initially set to A.)
4. Press the MODE button again to return to the clock display. The custom code will be changed.

NOTES:

- If no button is pressed within 30 seconds after the custom code is displayed, the system returns to the original clock indicator. In this case, start again from step 1.
- The air conditioner custom code is set to A prior to shipment. To change the custom code, contact your retailer.
- If you do not know the assigned code for the air conditioner, try each of the custom code (A →b →c →d) until you find the code which operates the air conditioner.

FIELD WORKING

2. External input and output

External input and output PCB

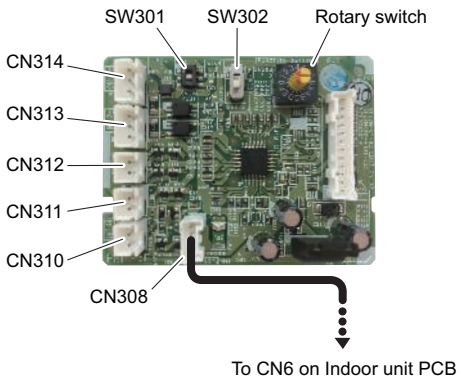

PCB	External input	External output	Connector	Input select	Input signal
External input and output (UTY-XCSXZ2)	Operation/Stop	—	CN313/ CN314	Dry contact/ Apply voltage	Edge/Pulse
	Forced stop				
	Forced thermostat off		CN313		Edge
	—	Operation status	CN310 CN311 CN312	—	—
		Error status			
		Indoor unit fan operation status			
		External heater output			

NOTE: External input and output PCB cannot be used with Wireless LAN adapter simultaneously.

FIELD WORKING

2-1. External input

With using external input function, some functions on this product can be controlled from an external device.

- “Operation/Stop” mode or "Forced stop" mode can be selected with function setting of indoor unit.
- A twisted pair cable (22AWG) should be used. Maximum length of cable is 492 ft (150 m).
- The wire connection should be separate from the power cable line.

■ External input and output PCB

The indoor unit Operation/Stop can be set by using the input connector on the PCB.

- **Input select:**
  Use either one of these types of connectors according to the application. (Both types of connectors cannot be used simultaneously.)
  – Dry contact
  In case of internal power supply, set the slide switch of SW301 to "NON VOL" side.

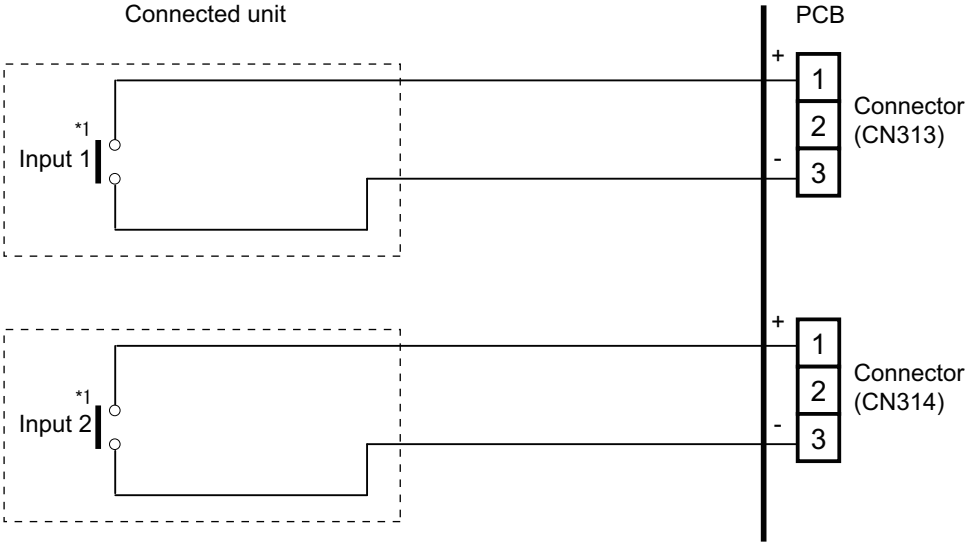

*1: The switches can be used on the following condition: DC 12 V to 24 V, 1 mA to 15 mA.

– Apply voltage
In case of external power supply, set the slide switch of SW301 to "VOL" side.

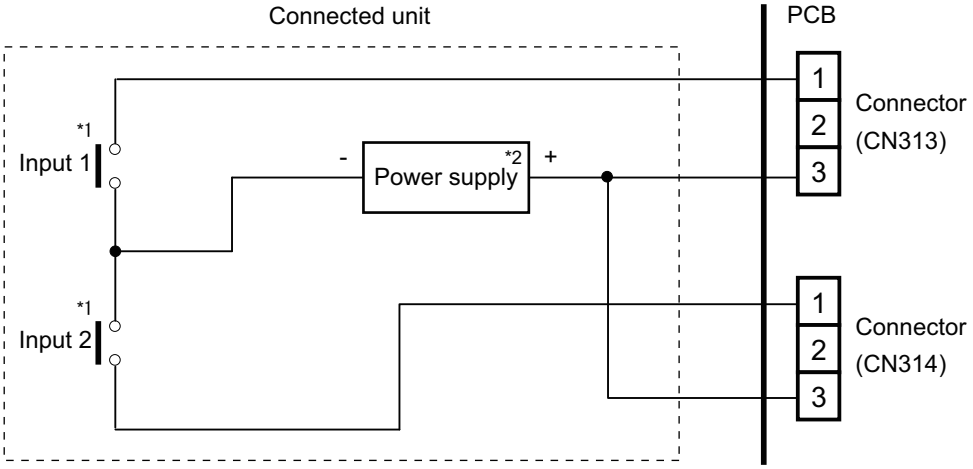

*1: The switches can be used on the following condition: DC 12 V to 24 V, 1 mA to 15 mA.
*2: Make the power supply DC 12 to 24 V, 10 mA or more.

FIELD WORKING

2-2. External output

Use an external output cable with appropriate external dimension, depending on the number of cables to be installed.

■ External input and output PCB

- A twisted pair cable (22AWG) should be used. Maximum length of cable is 82 ft (25 m).
- Output voltage: High DC 12 V±2 V, Low 0 V.
- Permissible current: 50 mA
- For details, refer to "Combination of external input and output" on page 05-13.

- **When indicator or other components are connected directly:**
  Example: Rotary SW on External input and output PCB is set to “1”.

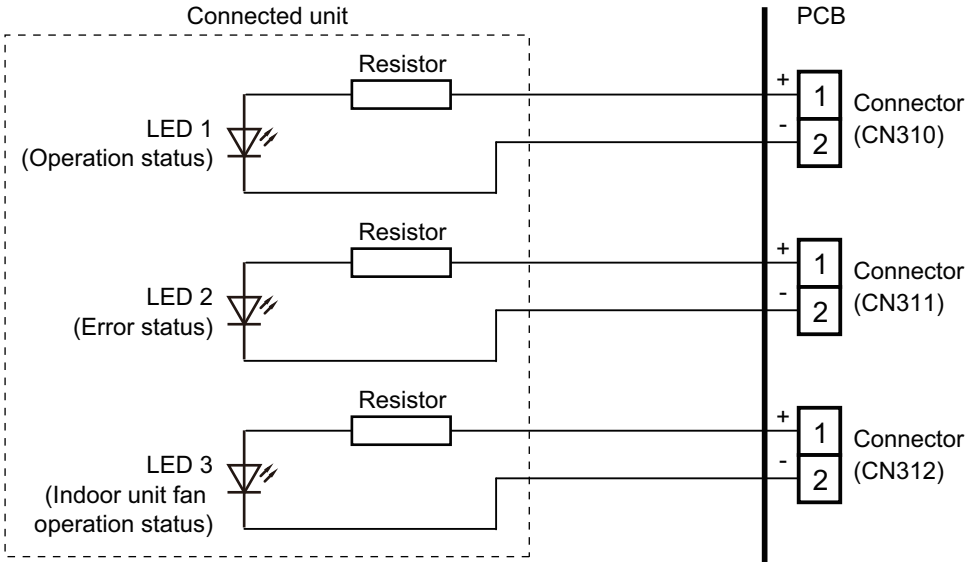

- **When connecting with a device equipped with a power supply:**
  Example: Rotary SW on External input and output PCB is set to “1”.

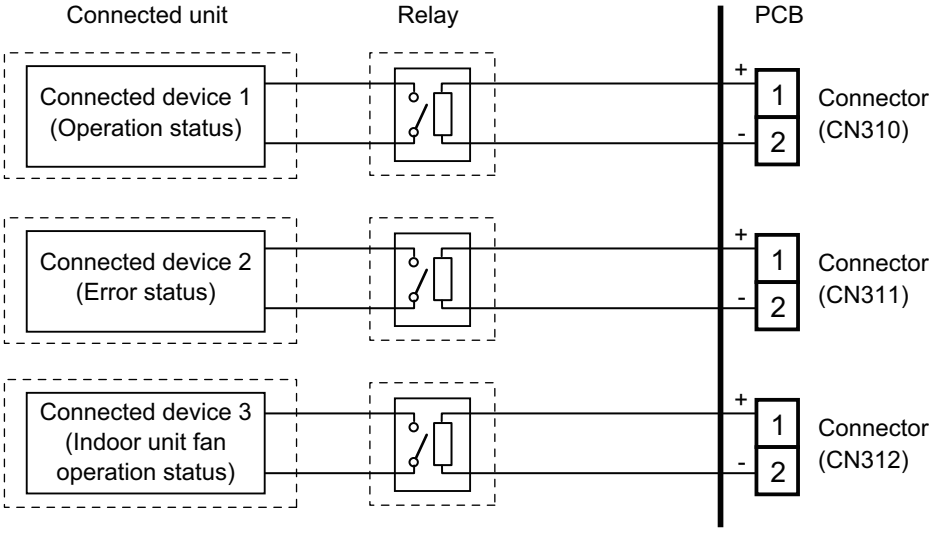

2-3. Combination of external input and output

By combining the function setting of the rotary switch setting of the External input and output PCB, you can select various combinations of functions.

Combination examples of external input and output are as follows:

External input and output PCB (Rotary SW)	External input		
	External input and output PCB		
	CN313	CN314	Signal type
1	Operation/Stop	Not available	Edge
	Operation	Stop	Pulse
2	Forced Thermostat OFF	Not available	Edge
3 - 9, A	(Setting prohibited)		
B	Forced Thermostat OFF	Not available	Edge
C	Forced Thermostat OFF	Not available	Edge
D	Forced Thermostat OFF	Not available	Edge

External input and output PCB (Rotary SW)	External output		
	External input and output PCB		
	CN310	CN311	CN312
1	Operation/Stop	Error status	Indoor unit fan operation status
2	Error status	Indoor unit fan operation status	External heater output
3 - 9, A	(Setting prohibited)		
B	Operation/Stop	Indoor unit fan operation status	External heater output
C	Operation/Stop	Error status	External heater output
D	Operation/Stop	Indoor unit fan operation status	Error status

NOTE: Input of Operation/Stop depends on the setting of function setting 46.
00: Operation/Stop mode 1 (R.C. enabled)
01: (Setting prohibited)
02: Forced stop
03: Operation/Stop mode 2 (R.C. disabled)

■ Input signal type

External input and output PCB:

The input signal type can be selected.

Signal type (edge or pulse) can be switched by the DIP switch SW302 on the External input and output PCB.

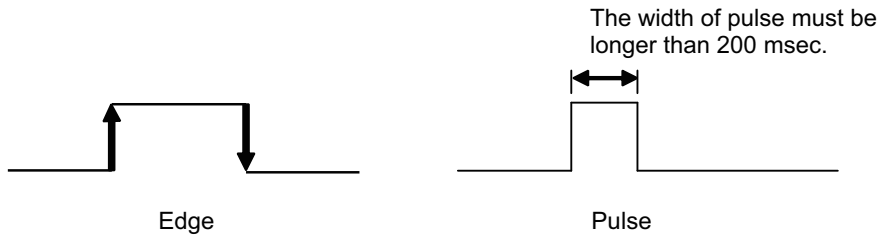

FIELD WORKING

2-4. Details of function

■ Control input function

- **When function setting is “Operation/Stop” mode 1**
  - In the case of “Edge” input:

Function setting	Rotary SW on External input and output PCB	External input		Input signal	Command
46-00	1	External input and output PCB	CN313	Off → On	Operation
				On → Off	Stop

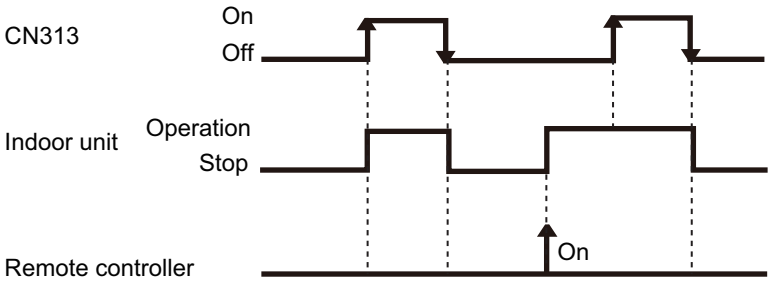

  - In the case of “Pulse” input:

Function setting	Rotary SW on External input and output PCB	External input		Input signal	Command
46-00	1	External input and output PCB	CN313	Pulse	Operation
			CN314	Pulse	Stop

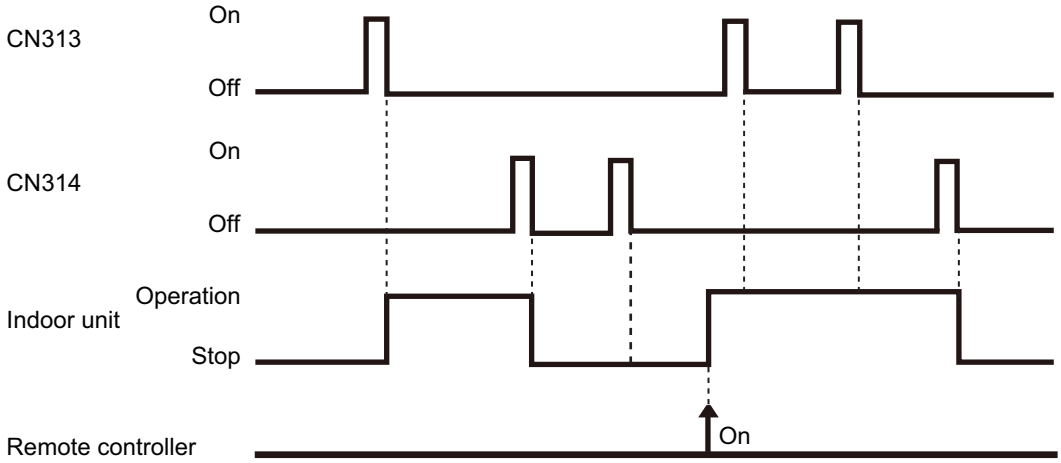

NOTES:

- The last command has priority.
- The indoor units within the same remote controller group operates in the same mode.

- **When function setting is “Forced stop” mode**
  - In the case of “Edge” input:

Function setting	Rotary SW on External input and output PCB	External input		Input signal	Command
46-02	1	External input and output PCB	CN313	Off → On	Forced stop
				On → Off	Normal

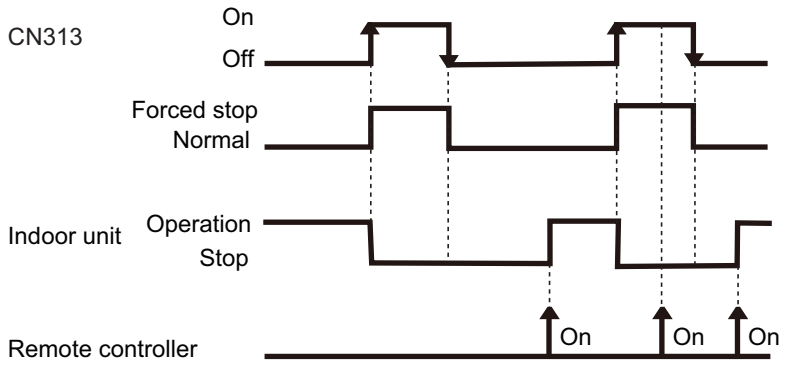

  - In the case of “Pulse” input:

Function setting	Rotary SW on External input and output PCB	External input		Input signal	Command
46-02	1	External input and output PCB	CN313	Pulse	Forced stop
			CN314	Pulse	Normal

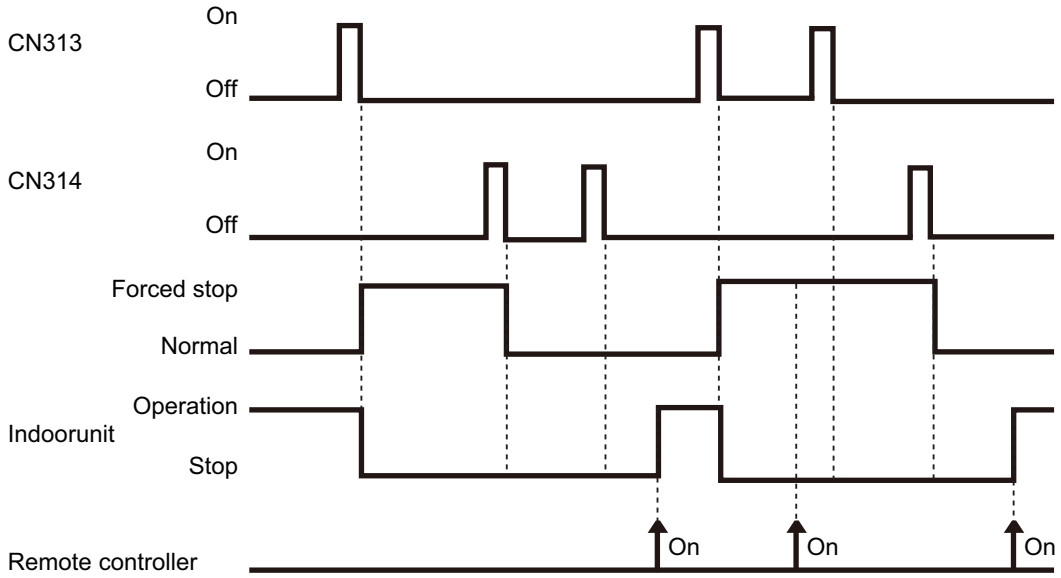

NOTES:

- When the forced stop is triggered, indoor unit stops and Operation/Stop operation by the remote controller is restricted.
- When forced stop function is used with forming a remote controller group, connect the same equipment to each indoor unit within the group.

FIELD WORKING

- **When function setting is “Operation/Stop” mode 2**
  - In the case of “Edge” input:

Function setting	Rotary SW on External input and output PCB	External input		Input signal	Command
46-03	1	External input and output PCB	CN313	Off → On	Operation
				On → Off	Stop (R.C. disabled)

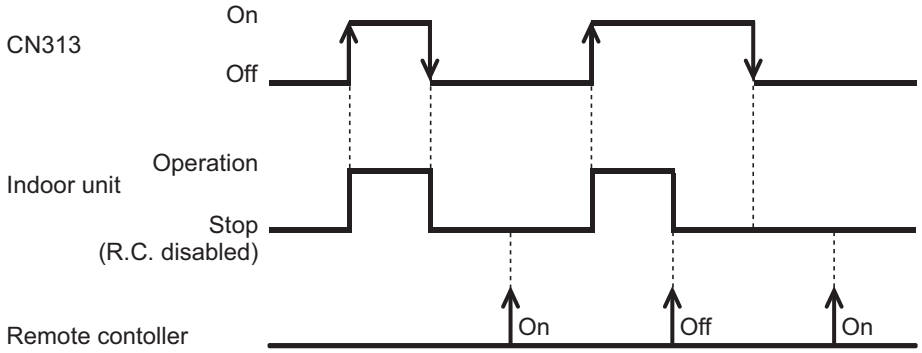

  - In the case of “Pulse” input:

Function setting	Rotary SW on External input and output PCB	External input		Input signal	Command
46-03	1	External input and output PCB	CN313	Pulse	Operation
			CN314	Pulse	Stop (R.C. disabled)

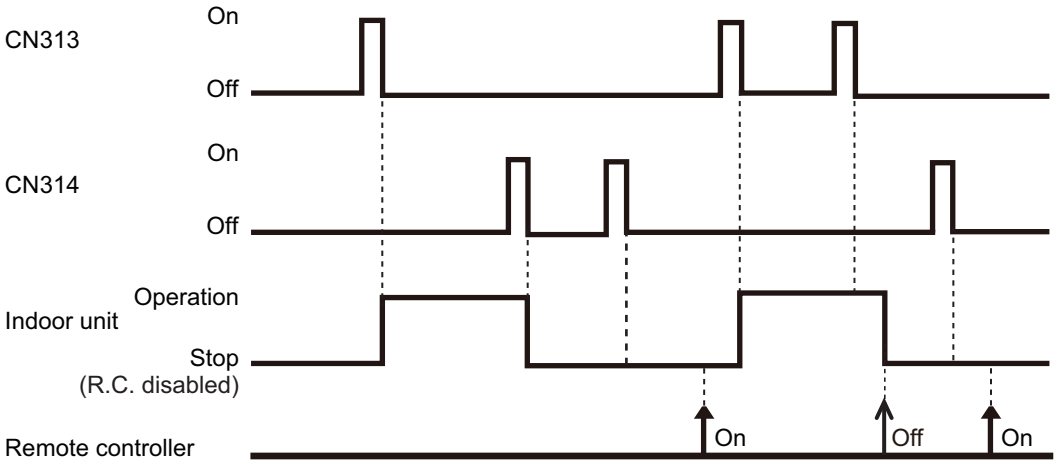

NOTE: When “Operation/Stop” mode 2 function is used with forming a remote controller group, connect the same equipment to each indoor unit within the group.

FIELD WORKING

- **Forced thermostat off function**

Rotary SW on External input and output PCB	External input		Input signal	Command
2 B C	External input and output PCB	CN313	Off → On	Thermostat off
			On → Off	Normal operation

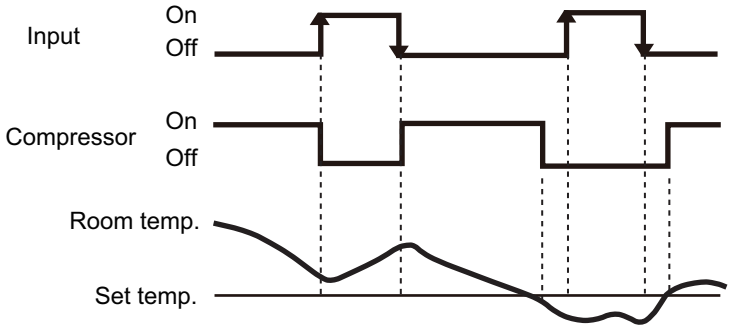

FIELD WORKING

■ Control output function

- **Operation/Stop status**

Rotary SW on External input and output PCB	External output		Output signal	Command
1 B C D	External input and output PCB	CN310	Off → On	Operation
			On → Off	Stop

The output is low when the unit is stopped.

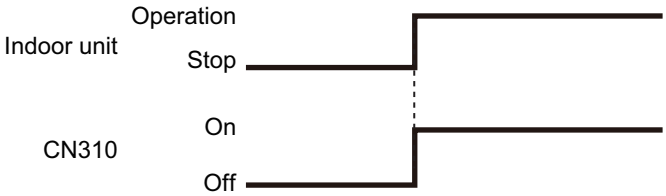

- **Error status**

Rotary SW on External input and output PCB	External output		Output signal	Command
1 C	External input and output PCB	CN311	Off → On	Error
			On → Off	Normal
D		CN312	Off → On	Error
			On → Off	Normal

The output is ON when an error is generated for the indoor unit.

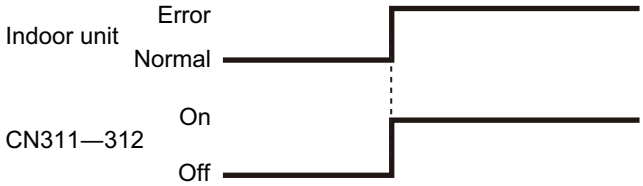

- **Indoor unit fan operation status**

Rotary SW on External input and output PCB	External output		Output signal	Command
1	External input and output PCB	CN312	Off → On	Fan run
			On → Off	Fan stop
2 B D		CN311	Off → On	Fan run
			On → Off	Fan stop

Output signal	Condition
On Low → High	The indoor unit fan is operating.
Off High → Low	The fan is stopped or during cold air prevention. During thermostat off when in dry mode operation.

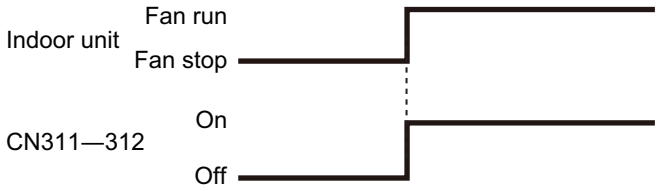

FIELD WORKING

- **External heater output**

Rotary SW on External input and output PCB	External output		Output signal	Command
2 B C	External input and output PCB	CN312	Off → On	Heater on
			On → Off	Heater off

FIELD WORKING

■ External heater output

Control	Primary heater	Auxiliary heater	Function setting	
			Indoor unit	Wired R. C.
			Control switching external heaters No. 61	Sensor activation*2
Auxiliary heater control 1	Heat pump	External device*1	61-00	—
Auxiliary heater control 2	Heat pump	External device	61-01	—
Heat pump prohibition control	External device	None	61-02	On (Enabled)
Auxiliary heater control by outdoor temperature 1	Heat pump	External device	61-03	On (Enabled)
Auxiliary heater control by outdoor temperature 2	Heat Pump	External device	61-04	On (Enabled)

NOTES:

- After turning off the heater, 3 minutes of standby time is required by next power-on of the heater.
- For items marked "—" in the table, any of validate or invalidate of the setting are acceptable.
- *1: External device means Hot water, Electrical heater, etc.
- *2: Sensor activation:
  - Setting change from the factory setting is required.
  - Indoor unit fan setting will be on for safety reason without sensor activation of wired remote controller.

FIELD WORKING

● Installation configuration of individual connection

External heating device is installed individually. (No use of indoor unit fan)

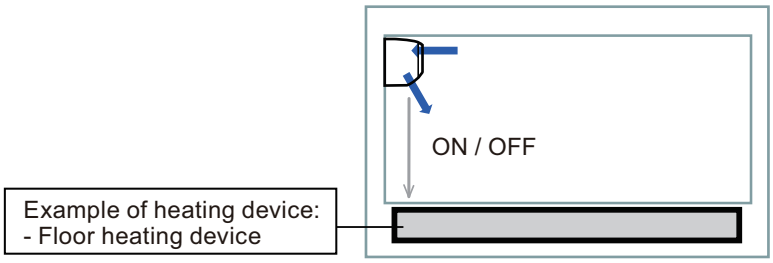

⚠ WARNING

- Design and install external heater appropriately with considering its protection.
- Inappropriate designing and installation of external heater may cause a fire by emitted heat from the external heater.
- Fujitsu General Ltd. is not responsible for inappropriate designing or installation of external heating device.

● Auxiliary heater control 1

Operation	Condition
Heater on	Heater is on as shown in following diagram of heating temperature.
Heater off	• Heater is off as shown in following diagram of heating temperature. • Other than heating mode • Error occurred • Forced thermostat off • Fan stop protection

- Temperature of heater on (Thon): Adjustable by function number 62 (Operating temperature switching of external heaters).
- All control temperatures will shift by adjusting “Thon”.

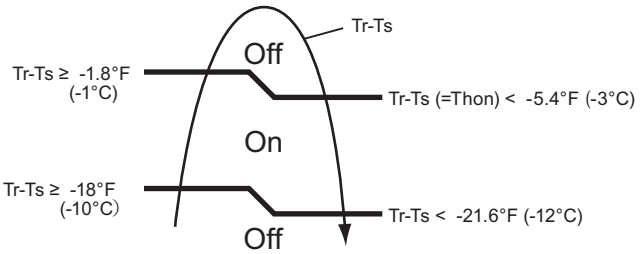

Tr: Room temperature
Ts: Set temperature
Thon: Heater on temperature

Example: When set temperature (Ts) is 72°F (22°C) (Factory setting),
- and room temperature (Tr) increases above 53.6°F (12°C), signal output is on.
- and room temperature (Tr) increases above 69.8°F (21°C), signal output is off.
- and room temperature (Tr) decreases below 66.2°F (19°C), signal output is on.
- and room temperature (Tr) decreases below 50°F (10°C), signal output is off.

● Auxiliary heater control 2

Operation	Condition
Heater on	Heater is on as shown in following diagram of heating temperature.
Heater off	• Heater is off as shown in following diagram of heating temperature. • Other than heating mode • Error occurred • Forced thermostat off • Fan stop protection

- Temperature of heater on (Thon): Adjustable by function number 62 (Operating temperature switching of external heaters).
- All control temperatures will shift by adjusting “Thon”.

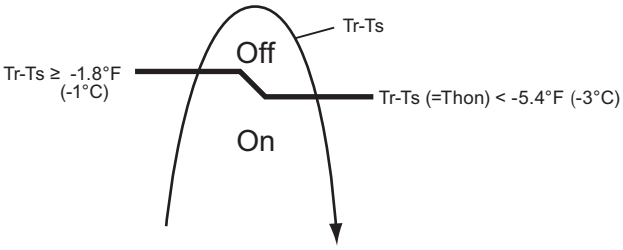

Tr: Room temperature
Ts: Set temperature
Thon: Heater on temperature

● Heat pump prohibition control

Perform heating by external heater only. Indoor unit is continuous thermostat off.

Operation	Condition
Heater on	Heater is on as shown in following diagram of heating temperature.
Heater off	• Heater is off as shown in following diagram of heating temperature. • Other than heating mode • Error occurred • Forced thermostat off

- Temperature of heater on (Thon): Adjustable by function number 62 (Operating temperature switching of external heaters).
- All control temperatures will shift by adjusting “Thon”.

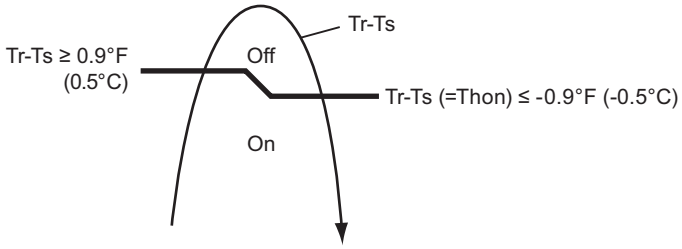

Tr: Room temperature
Ts: Set temperature
Thon: Heater on temperature

- **Operation status**

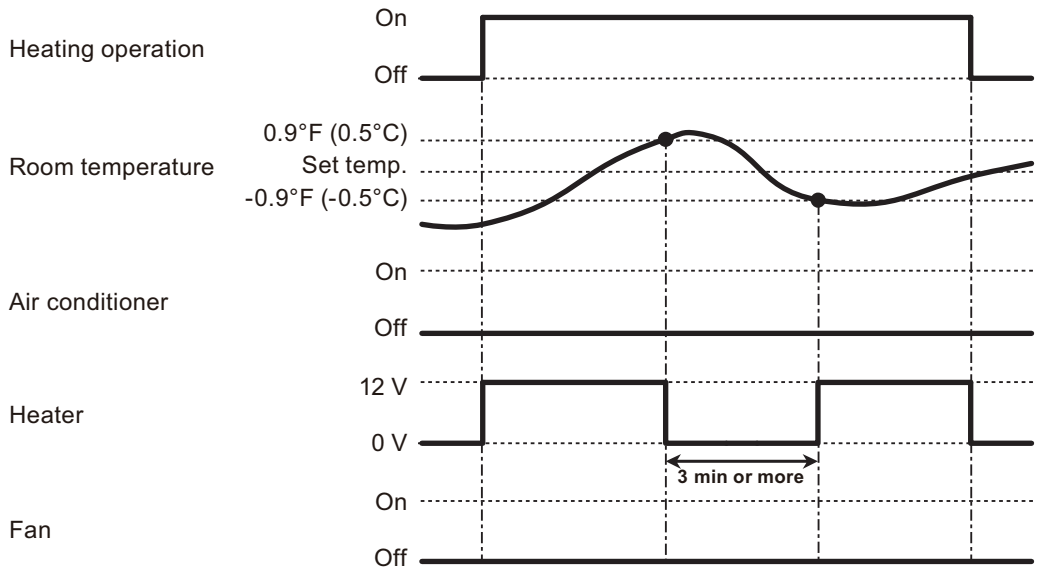

NOTE: In following operations, compressor will be on.
- Other than heating
- Test run

● Auxiliary heater control by outdoor temperature 1

This control selects heat pump or external heater according to the outdoor temperature. When outdoor temperature is high, the heating is performed by using heat pump only.

Operation	Condition
Heater on	Heater is on as shown in following diagram of heating temperature.
Heater off	• Heater is off as shown in following diagram of heating temperature. • Other than heating mode • Error occurred • Forced thermostat off • Heat pump only zone

- Temperature of heater on (Thon): Adjustable by function number 62 (Operating temperature switching of external heaters).
- All control temperatures will shift by adjusting “Thon”.
- Outdoor temperature zone boundary A and B: Adjustable individually by function setting number 66 and 67.

- **External heater output**

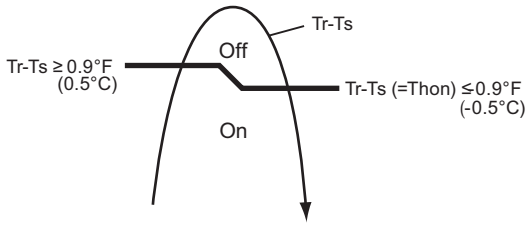

Tr: Room temperature
Ts: Set temperature
Thon: Heater on temperature

- **Outdoor temperature zone**

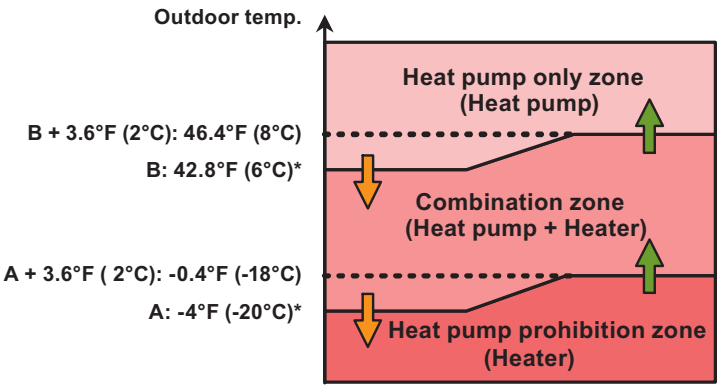

*: Adjustable by function setting 66 and 67

- **Operation status**

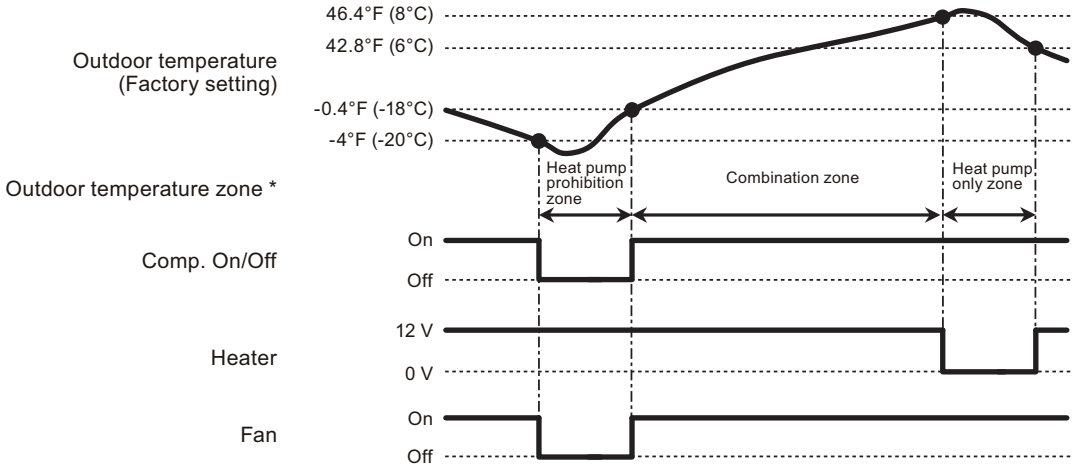

* The outdoor temperature zone transition from one to another will stay in that zone for minimum of 30 min.

NOTE: In following operations, compressor will be on in heat pump prohibition zone.

- Other than heating
- Test run

FIELD WORKING

FIELD WORKING

● Auxiliary heater control by outdoor temperature 2

This control selects heat pump or external heater according to the outdoor temperature. Even when outdoor temperature is high, the heating is performed by using both of heat pump and external heater.

Operation	Condition
Heater on	Heater is on as shown in following diagram of heating temperature.
Heater off	• Heater is off as shown in following diagram of heating temperature. • Other than heating mode • Error occurred • Forced thermostat off

- Temperature of heater on (Thon): Adjustable by function number 62 (Operating temperature switching of external heaters).
- All control temperatures will shift by adjusting “Thon”.
- Outdoor temperature zone boundary A: Adjustable by function setting number 66.

- **External heater output**

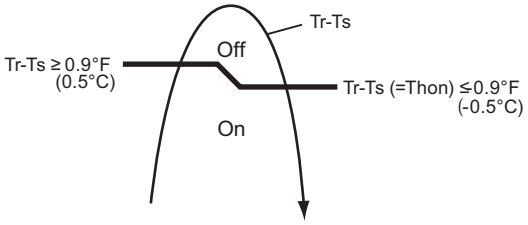

Tr: Room temperature
Ts: Set temperature
Thon: Heater on temperature

- **Outdoor temperature zone**

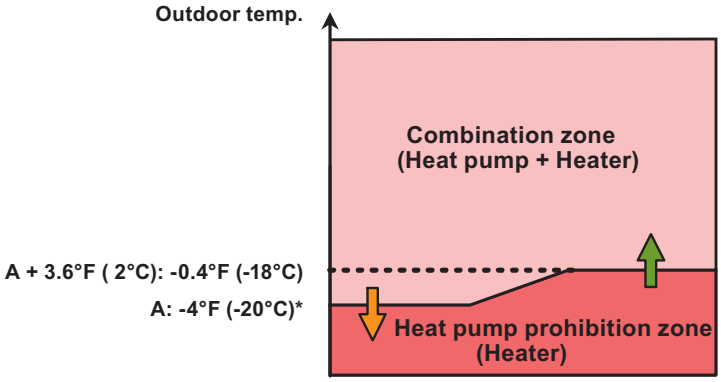

*: Adjustable by function setting 66

- **Operation status**

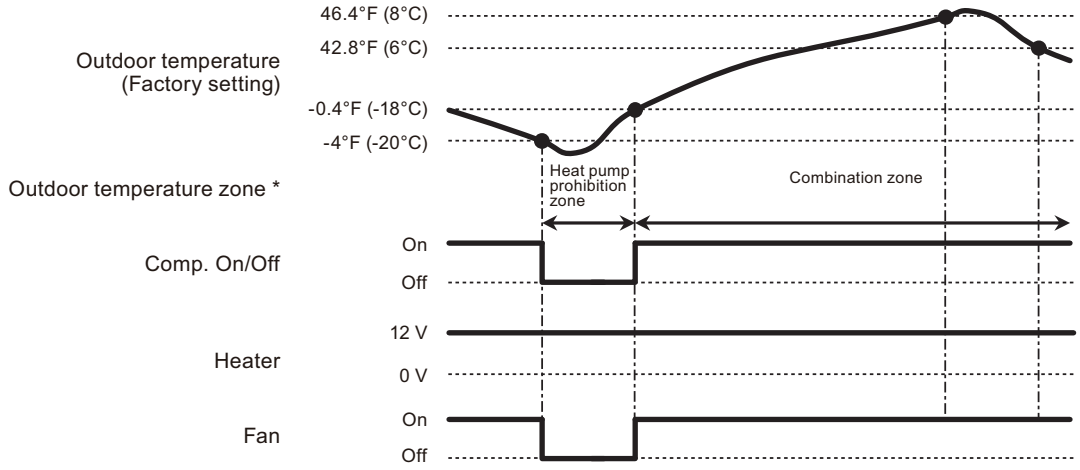

* The outdoor temperature zone transition from one to another will stay in that zone for minimum of 30 min.

NOTE: In following operations, compressor will be on in heat pump prohibition zone.

- Other than heating
- Test run

FIELD WORKING

FIELD WORKING

SUBCONTRACTOR WARRANTY FORM

PROJECT: Madera WHSE

LOCATION: S Schnoor Avenue & W Almond Avenue

OWNER: Madera Industrial WHSE, LLC

GENERAL CONTRACTOR: Valley Air Conditioning & Repair, Inc

We, Valley Air Conditioning, Subcontractor for DBKO Design + Build, L, do hereby warrant that all labor and materials furnished and work performed in conjunction with the above referenced project are in accordance with the Contract Documents and authorized modifications thereto, and will be free from defects due to defective materials or workmanship for a period of 1 year(s) from the Date of Substantial Completion.

Should any defect develop during the warranty period due to improper materials, workmanship or arrangement, the defect, including adjacent work displaced, shall be made good by the undersigned at no expense to the Owner.

The Owner will give Subcontractor written notice of defective work. Should Subcontractor fail to correct defective work within 60 days after receiving written notice, the Owner may, at his option, correct defects and charge Subcontractor costs for such correction. Subcontractor agrees to pay such charges upon demand.

FOR: HVAC	FOR:
BY: Valley Air Conditioning & Repair, Inc	BY:
TITLE: Manager Steve Menann	TITLE:
DATE: 4/24/2023	DATE:

SUBCONTRACTOR WARRANTY FORM

PROJECT: Madera Industrial WHSE

LOCATION: South Schnoor Avenue & West Almond Avenue

OWNER: Madera Industrial WHSE, LLC

GENERAL CONTRACTOR: DBKO Build+Design, LLC

We, Valleystone Masonry, Subcontractor for DBKO Build+Design, do hereby warrant that all labor and materials furnished and work performed in conjunction with the above referenced project are in accordance with the Contract Documents and authorized modifications thereto, and will be free from defects due to defective materials or workmanship for a period of 1 year(s) from the Date of Substantial Completion.

Should any defect develop during the warranty period due to improper materials, workmanship or arrangement, the defect, including adjacent work displaced, shall be made good by the undersigned at no expense to the Owner.

The Owner will give Subcontractor written notice of defective work. Should Subcontractor fail to correct defective work within 60 days after receiving written notice, the Owner may, at his option, correct defects and charge Subcontractor costs for such correction. Subcontractor agrees to pay such charges upon demand.

FOR: Eduardo Ruiz.E

BY: Eduardo Ruiz

TITLE: President

DATE: April 24, 2023